MANUALS FOR THIS PRINTER

: Paper
: CD-ROM
: Manuals for Administrator
: Manuals for Client

MANUALS PROVIDED

Printed Manuals

- ☑ MANUALS FOR THIS PRINTER (this sheet)
- ☐ Setup Guide
- ☐ Maintenance Guide 1
- ☐ Administrator Reference 1
- ☐ Printer Client Reference 1

Manuals on CD-ROM

- ☐ MANUALS FOR THIS PRINTER
- ☐ Maintenance Guide 2
- ☐ Administrator Reference 2
- ☐ Printer Client Reference 2
- ☐ PostScript 3 Supplement
- ☐ UNIX Supplement

- If the manuals do not open automatically, double-click the following file on the CD-ROM.
  Windows MANUAL.EXE
  Macintosh manual
- Printed manuals are also included as PDF files on the CD-ROM.
  Windows / Macintosh
  [Language] — setup, admin 1, mainte 1, client 1

Icons

Click to go to the top page where you can select other manuals.

Click to go to the next page.

Click to go to the table of contents of the viewed manual.

- If you want to open multiple manuals at the same time, follow the procedure below:
  From the **[File]** menu, point to **[Preferences]** and select **[General...]**. Clear the **[Open Cross-Doc Links in Same Window]** check box in the **[General Preference]** dialog box that appears.

PREPARING THE PRINTER

Printer and option installation

Setup Guide

Provides information about setting up the printer and its options.
❑ Guide to the Printer
❑ Installation and Connection

Network printer configuration

Administrator Reference 1

Provides basic information about setting up and using the printer in a network environment.
❑ Configuring the printer for the Network

Administrator Reference 2

Provides information about setting up the printer as a print server and making printer settings with the operation panel.
❑ Setting up as a print server on Windows NT/Windows 2000
❑ Setting up as a print server on NetWare
❑ Monitoring and configuring the printer
❑ Making printer settings with the operation panel

PREPARING THE CLIENT COMPUTER

Printing from Windows

Printer Client Reference 1

Provides information about installing and configuring the printer driver.
❑ Windows 95/98/Me, Windows 2000, Windows NT4.0

Printing from Macintosh, UNIX or NetWare

Printer Client Reference 2

Provides information about setting up and using the printer in a Macintosh or NetWare environment, and also provides information about software and utilities included on the CD-ROM.
❑ Using the printer in a Macintosh or NetWare environment
❑ Software and utilities included on the CD-ROM
❑ When the printer does not print and other printing problems
❑ Checking the printer status

PostScript 3 Supplement

Provides information about the meaning and features for the PostScript 3 printer driver.
❑ Installing and uninstalling the PostScript printer driver
❑ Using Printer Utility for Mac

UNIX Supplement

Provides information about setting up and using the printer in a UNIX environment.
❑ Using the installation shell script

MAINTENANCE

Maintenance and Troubleshooting

Maintenance Guide 1

Provides information about replacing consumables and cleaning and adjusting the printer.
❑ Replacing consumables such as toner
❑ Cleaning and adjusting the printer

Maintenance Guide 2

Provides information about paper and dealing with error messages.
❑ Paper and other media
❑ Troubleshooting

G060-6800A Copyright © 2001 UE USA EE GB AE AE

Setup Guide

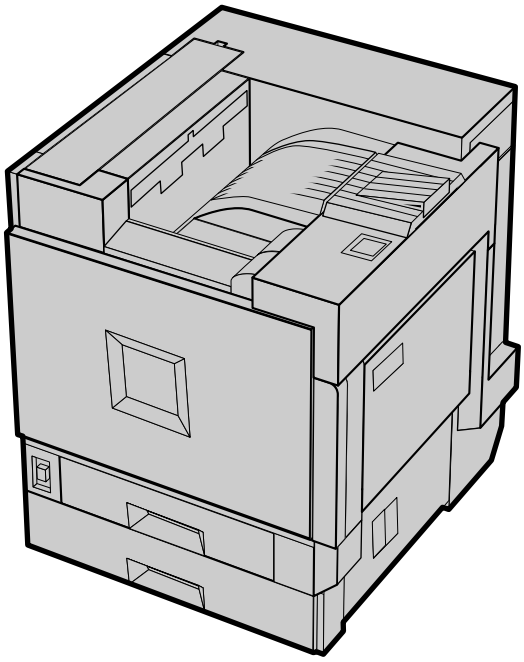

Read this manual carefully before you use this product and keep it handy for future reference.
For safety, please follow the instructions in this manual.

Introduction

This manual contains detailed instructions on the operation and maintenance of this machine. To get maximum versatility from this machine all operators should carefully read and follow the instructions in this manual. Please keep this manual in a handy place near the machine.

Please read the Safety Information before using this machine. It contains important information related to USER SAFETY and PREVENTING EQUIPMENT PROBLEMS.

Power Source

120 V, 60 Hz, 10 A or more

Please be sure to connect the power cable to a power source as above.

Operator Safety:

This machine is considered a CDRH class I laser device, safe for office/ EDP use. The machine contains 7 milliwatt, 645 - 660 nanometer wavelength, AlGaInp Laser Diode. Direct (or indirect reflected) eye contact with the laser beam might cause serious eye damage. Safety precautions and interlock mechanisms have been designed to prevent any possible laser beam exposure to the operator.

Laser Safety:

The Center for Devices and Radiological Health (CDRH) prohibits the repair of laser-based optical unit in the field. The optical housing unit can only be repaired in a factory or at a location with the requisite equipment. The laser subsystem is replaceable in the field by a qualified Customer Engineer. The laser chassis is not repairable in the field. Customer engineers are therefore directed to return all chassis and laser subsystems to the factory or service depot when replacement or the optical subsystem is required.

Important

Parts of this manual are subject to change without prior notice. In no event will the company be liable for direct, indirect, special, incidental, or consequential damages as a result of handling or operating the machine.

Caution:

Use of controls or adjustment or performance of procedures other than those specified in this manual might result in hazardous radiation exposure.

Do not attempt any maintenance or troubleshooting other than that mentioned in this manual. This printer contains a laser beam generator and direct exposure to laser beams can cause permanent eye damage.

Two kinds of size notation are employed in this manual. With this machine refer to the inch version.

For good copy quality, the supplier recommends that you use genuine toner from the supplier.

The supplier shall not be responsible for any damage or expense that might result from the use of parts other than genuine parts from the supplier with your office products.

Trademarks

Microsoft, Windows, and Windows NT are registered trademarks of Microsoft Corporation in the United States and/or other countries.

IPS-PRINT Printer Language Emulation Copyright 1999-2000, XIONICS DOCUMENT TECHNOLOGIES, INC., All Rights Reserved.

Ethernet is a registered trademark of Xerox Corporation.

Other product names used herein are for identification purposes only and might be trademarks of their respective companies. We disclaim any and all rights involved with those marks.

Notes:

Some illustrations might be slightly different from your machine.

Certain options might not be available in some countries. For details, please contact your local dealer.

Note

The proper names of the Windows operating systems are as follows:

- Microsoft® Windows® 95 operating system
- Microsoft® Windows® 98 operating system
- Microsoft® Windows® Millennium Edition (Windows Me)
- Microsoft® Windows® 2000 Professional
- Microsoft® Windows® 2000 Server
- Microsoft® Windows NT® Server operating system Version 4.0
- Microsoft® Windows NT® Workstation operating system Version 4.0

Safety Information

When using your equipment, the following safety precautions should always be followed.

Safety During Operation

In this manual, the following important symbols are used:

⚠ ***WARNING:***
Indicates a potentially hazardous situation which, if instructions are not followed, could result in death or serious injury.

⚠ ***CAUTION:***
Indicates a potentially hazardous situation which, if instructions are not followed, may result in minor or moderate injury or damage to property.

⚠ *WARNING:*

- ***Confirm that the wall outlet is near the machine and freely accessible, so that in event of an emergency, it can be unplugged easily.***
- ***Disconnect the power plug (by pulling the plug, not the cable) if the power cable or plug becomes frayed or damaged.***
- ***To avoid hazardous electric shock or laser radiation exposure, do not remove any covers or screws other than those specified in this manual.***
- ***Turn off the power and disconnect the power plug (by pulling the plug, not the cable) if any of the following conditions exist:***
  - ***You spill something into the equipment.***
  - ***You suspect that your equipment needs service or repair.***
  - ***Your equipment's cover has been damaged.***
- ***Do not incinerate spilled toner or used toner. Toner dust is flammable and might ignite when exposed to an open flame.***
- ***Disposal should take place at an authorized dealer or appropriate collection site.***
- ***If you dispose of the used toner containers yourself, dispose of them according to local regulations.***

⚠ *CAUTION:*

- *Protect the equipment from dampness or wet weather, such as rain, snow, and so on.*
- *Unplug the power cable from the wall outlet before you move the equipment. While moving the equipment, you should take care that the power cable will not be damaged under the equipment.*
- *When you disconnect the power plug from the wall outlet, always pull the plug (not the cable).*
- *Do not allow paper clips, staples, or other small metallic objects to fall inside the equipment.*
- *Do not eat or swallow toner.*
- *Keep toner (used or unused) and toner cartridge out of reach of children.*
- *For environmental reasons, do not dispose of the equipment or expended supplies at a household waste collection point. Disposal should take place at an authorized dealer or an appropriate collection site.*
- *Our products are engineered to meet the highest standards of quality and functionality. When purchasing expendable supplies, we recommend using only those specified by an authorized dealer.*
- *The inside of the machine becomes very hot. Do not touch the parts with a label indicating a “hot surface”. Touching a “hot surface” could result in a burn. (⚠: means "hot surface".)*

ENERGY STAR Program

ENERGY STAR®

As an ENERGY STAR Partner, we have determined that this machine model meets the ENERGY STAR Guidelines for energy efficiency.

The ENERGY STAR Guidelines intend to establish an international energy-saving system for developing and introducing energy-efficient office equipment to deal with environmental issues, such as global warming.

When a product meets the ENERGY STAR Guidelines for energy efficiency, the Partner shall place the ENERGY STAR logo onto the machine model.

This product was designed to reduce the environmental impact associated with office equipment by means of energy-saving features, such as Low-power mode.

❖ Low-power Mode (Energy Saver mode)

This printer automatically lowers its power consumption 60 minutes after the last operation has been completed. To exit Low-power (Energy Saver) mode, press any key on the operation panel. For details about how to configure Energy Saver mode, see "*Making Printer Settings with the Operation Panel*" in Administrator Reference 2 as a PDF file on the CD-ROM.

❖ Specifications

Energy Saver mode	Power Consumption	45 W or less
	Default Time	60 minutes
	Recovery Time	120 seconds or less

How to Read This Manual

Symbols

In this manual, the following symbols are used:

⚠ ***WARNING:***
This symbol indicates a potentially hazardous situation which, if instructions are not followed, could result in death or serious injury.

⚠ ***CAUTION:***
This symbol indicates a potentially hazardous situation which, if instructions are not followed, may result in minor or moderate injury or damage to property.

* The statements above are notes for your safety.

Important
If this instruction is not followed, paper might be misfed, or data might be lost. Be sure to read this.

Preparation
This symbol indicates the prior knowledge or preparations required before operating.

Note
This symbol indicates precautions for operation, or actions to take after misoperation.

Limitation
This symbol indicates numerical limits, functions that cannot be used together, or conditions in which a particular function cannot be used.

Reference
This symbol indicates a reference.

[ ]
Keys that appear on the machine's panel display.

Keys and buttons that appear on the computer's display.

【 】
Keys built into the machine's operation panel.

Keys on the computer's keyboard.

TABLE OF CONTENTS

1. Getting Started

Features of this Printer **1**

Guide to the Printer **2**
- Exterior: Front View 2
- Exterior: Rear View 4
- Inside 5
- Operation Panel 6

2. Setting Up

Where to Put the Printer **7**

Checking the Contents of the Box **10**

Unpacking the Printer **12**

Installing the Fuser Oil Unit **15**

Installing Options **18**
- How to Use the Screwdriver 22
- Installing the Paper Feed Unit 22
- Installing the Memory Unit Type B (SDRAM Module) 30
- Installing the 1394 Interface Unit Type1045 32
- Installing the User Account Enhance Unit TypeB 36
- Installing the Printer Hard Disk Type 3800C 39
- Installing the Duplex Unit Type 3800C 42
- Installing the SR770 (2 Tray Finisher) 48
- Installing the Mail Bin Type 3800C (4-bin Mailbox) 55

Installing the Toner Cartridge **59**

Loading Paper **61**
- Loading Paper in Tray 1 61
- Tray 2 (Standard), 500-sheet Paper Feed Unit, 1000-sheet Paper Feed Unit ... 62
- 2000-sheet Large Capacity Tray 66

Turning the Power On **67**

Selecting the Panel Display Language **68**

Test Printing **69**

Connecting the Printer **70**
- Connection to a Network 70
- Parallel Connection 71

INDEX **72**

1. Getting Started

Features of this Printer

❖ High Productivity of 28 ppm in Full Color

This printer comes with a four-tandem engine which enables the high performance output of 28 ppm (pages per minute) in full color. You can print conference records, sales promotion ads, etc. in full color, as you would do with a monochrome printer. The printer's monochrome speed of 38 ppm is equivalent to that of a high-speed monochrome laser printer, enabling you to use this printer as your high performance network printer for both color and monochrome printing.

❖ High Image Quality Output in True 1200 dpi

True 1200 dpi resolution makes it possible for this printer to output text documents, documents containing images that are read in with a digital camera or scanner, and graphics in fine detail. This high resolution can be output at the speed of 14 ppm.

❖ Versatile Options with the New Generation Controller

With the new high-speed, 64-bit controller architecture and the new RPCS command system, optimized for Windows software, this printer can output at top speed. You can also use "Locked Print [*1]", where the printer does not output unless a password is entered, or manage the number of printings and limit the number of use per user [*2]. This printer answers the controller's needs that only a color printer can do.

[*1] Optional Printer Hard Disk is required.
[*2] Optional User Account Enhance Unit is required.

❖ First-of-its-Class Finisher

The first-of-its-class Finisher [*1] is not only compatible with Duplex Print [*2] and electronic sort printing [*3], but also corresponds to post process printing. High-speed Duplex Print, stapling, punching, etc. can be done with one command for the required number of pages in the appropriate form. The work flow of color documents up until now can be vastly improved.

[*1] Optional 2 Tray Finisher is required.
[*2] Optional Duplex Unit is required.
[*3] Optional Memory Unit and Printer Hard Disk are required.

Guide to the Printer

1

Exterior: Front View

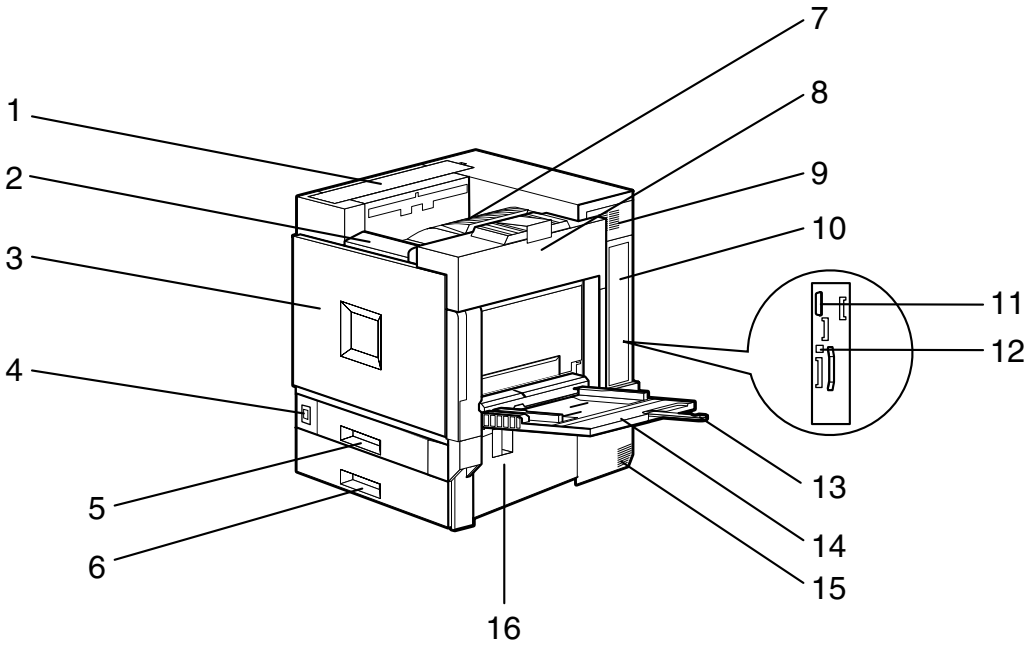

1. Upper Cover

Remove to install the optional 4-bin Mailbox.

2. Operation Panel

Contains keys for printer operation and a panel display that shows the printer status.

⇒ p.6 “Operation Panel”

3. Front Cover

Open this cover when replacing the Waste Toner Bottle, Development Unit or Photoconductor Unit. A screwdriver is attached to the front cover.

4. Power Switch

Use this switch to turn the power on and off.

5. Tray 1

Loads up to 500 sheets of plain paper in this tray for printing. Exclusive for 11" × $8^1/_2$" paper.

6. Tray 2

Loads up to 500 sheets of plain paper in this tray for printing.

7. Standard Tray

Output is stacked here with the print side down.

Note

❒ If printed A3 short-edge feed or 11x17 short-edge feed papers fall off the standard tray, raise the fence to prevent them from falling.

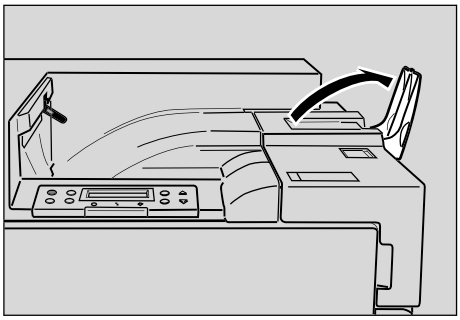

ZGBH010N

8. Upper Right Cover

Open this cover to replace toner cartridge.

9. Ventilator

This hole helps to keep components inside the printer from overheating. Do not block or obstruct the ventilator. A malfunction may occur due to overheating.

10. Controller Board

Slide out to install options, such as memory units and interface unit.

11. Parallel Port

Use a parallel cable to connect the printer to the host computer.

12. Ethernet Port

Use an network interface cable to connect the printer to the network.

13. Bypass Tray Extension

Pull out this extension to load paper in the bypass tray when its length is longer than A4 ▭.

14. Bypass Tray

Use to print on thick paper, OHP transparencies, custom size paper, as well as plain paper. Up to 100 sheets of plain paper can be loaded.

15. Ventilator

This hole helps to keep components inside the printer from overheating. Do not block or obstruct the opening. A malfunction may occur due to overheating.

16. Right Cover

Open this cover to remove misfed paper.

Exterior: Rear View

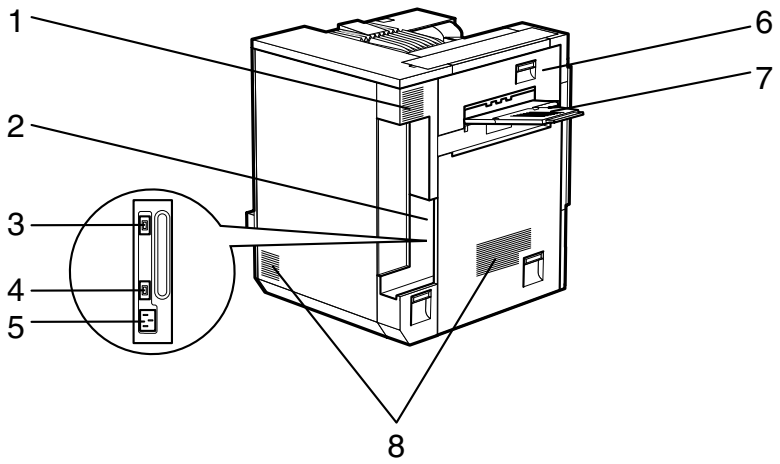

1. Ventilator and Dustproof Filter

This hole helps to keep components inside the printer from overheating. Do not block or obstruct the ventilator. A malfunction may occur due to overheating. Remove the ventilator to replace the internal dustproof filter.

2. Connector

Connect the main power cable, cables from options, etc. to the appropriate port.

3. Duplex Unit Port

Connect the cable for the Duplex Reversal Unit to this port.

4. 4-bin Mailbox/2 Tray Finisher Port

Connect the cable for the 4-bin Mailbox or the 2 Tray Finisher to this port.

5. Power Port

Connect the power cable to this port and the other cable end to the wall outlet.

6. Upper Left Cover

Open this cover to remove misfed paper or when replacing the Fusing Unit.

7. External Tray

Printed output is stacked here with the print side up.

8. Ventilators

These holes help to keep components inside the printer from overheating. Do not block or obstruct the ventilators. A malfunction may occur due to overheating.

Inside

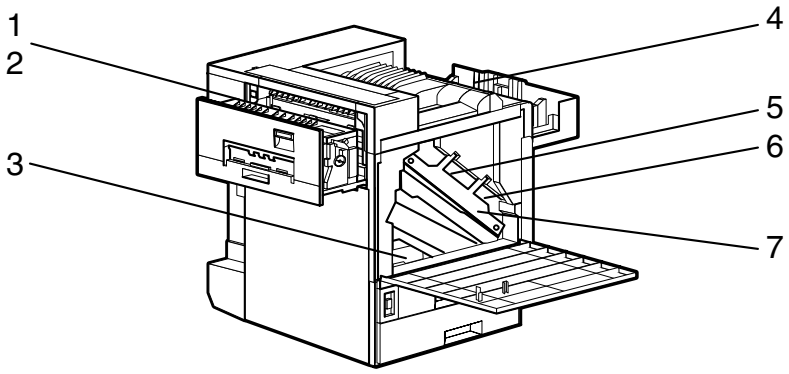

1. Fusing Unit

Fuses the image on paper.

When "Replace Fusing Unit (Type C)" appears on the panel display, replace this unit.

2. Fuser Oil Unit

Attach to the Fusing Unit.

When "Replace Fuser Oil Unit (TypeG)" appears on the panel display, replace this unit.

3. Waste Toner Bottle

Collects toner that is wasted during printing.

When "Replace Waste Toner (Type E)" appears on the panel display, replace with a new waste toner bottle.

4. Toner Cartridge

Loads from the printer rear in the order of magenta (M), cyan (C), yellow (Y), and black (K).

When "Add Toner: color" appears on the panel display, replace the appropriate toner cartridge.

5. Photoconductor Unit

The printer comes with one black Photoconductor Unit and three color (yellow, cyan, magenta) Photoconductor Units.

When "Replace Color PCU (Type A)" appears on the panel display, replace the three color Photoconductor Units.

When "Replace Black PCU (Type F)" appears on the panel display, replace the black Photoconductor Unit.

6. Development Unit

The printer comes with one black Development Unit and three color (yellow, cyan, magenta) Development Units.

When "Replace Color Dev. Unit(TypeB)" appears on the panel display, replace the three color Development Units.

When "Replace Black Dev. Unit(TypeD)" appears on the panel display, replace the black Development Unit.

7. Inner Cover

Open this cover when replacing the Photoconductor Unit or Development Unit.

Operation Panel

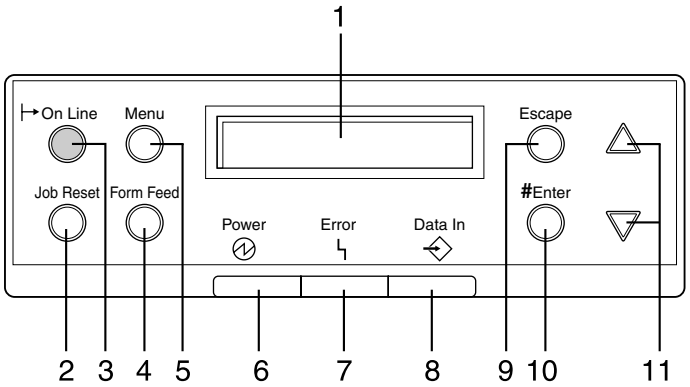

1. Panel display

Shows the current status of the printer and error messages.

2. 【Job Reset】 key

When the printer is online, press this key to cancel any ongoing print job.

3. 【On Line】 key

Indicates whether the printer is online or offline.

Press this key to switch between online and offline.

When the lamp is lit, the printer is online, enabling data reception from the host computer.

When the lamp is off, the printer is offline, disabling data reception from the host computer.

Press this key to return to the ready condition.

4. 【Form Feed】 key

When the printer is offline, press this key to print all the data left in the printer's input buffer.

You can use this to force the printer to print the data received in the online status when the paper size or type does not match with the actual set size or type.

5. 【Menu】 key

Press this key to make and check the current printer settings.

6. Power indicator

Power indicator is on while the power switch is on. Power indicator is off when the power is turned off or while the printer is in Energy Saver mode.

7. Error indicator

Lights up whenever any printer error occurs. However, turns off in the Energy Saver mode.

8. Data In indicator

Blinks while the printer is receiving data from a computer. Data In indicator is on if there is data to be printed.

9. 【Escape】 key

Press this key to return to the previous condition on the panel display.

10. 【Enter】 key

Press this key to execute menu items selected on the panel display.

11. 【▲】, 【▼】 Keys

Use these keys to increase or decrease values on the panel display when making settings. Keep pressing the key to quicken scrolling, and increase or decrease values on the panel display in units of 10.

Where to Put the Printer

The printer's location should be carefully chosen because environmental conditions greatly affect its performance.

⚠ ***WARNING:***

- ***Confirm that the wall outlet is near the machine and freely accessible, so that in the event of an emergency, it can be easily unplugged.***
- ***Only connect the machine to the power source described on this sheet.***
- ***Avoid multi-wiring.***
- ***Do not damage, break or make any modifications to the power cable. Do not place heavy objects on it, pull it hard or bend it more than necessary. These actions could damage the cable. A frayed or damaged cable might cause an electrical and fire hazard.***

⚠ ***CAUTION:***

- *Do not handle the plug with wet hands. Doing this might cause an electrical shock.*
- *Keep the machine in an area that is within optimum environmental conditions. Operating the machine in an environment that is outside the recommended ranges of humidity and temperature can cause an electrical or fire hazard. Keep the area around the socket free of dust. Accumulated dust can become an electrical or fire hazard.*
- *Place the machine on a strong and level surface. Otherwise, the machine might fall and injure someone.*
- *If you use the machine in a confined space, confirm there is a continuous air turnover.*

2

❖ Space Required for Installation

Leave enough space around the printer. This space is necessary to operate the printer. The recommended (or minimum) space requirements are as follows:

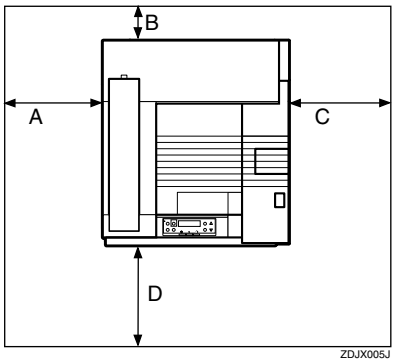

A: 46 cm (19 inch) or more
B: 10 cm (4 inch) or more
C: 55 cm (22 inch) or more
D: 70 cm (28 inch) or more

❖ Optimum Environmental Conditions

Possible and recommended temperature and humidity ranges are as follows:

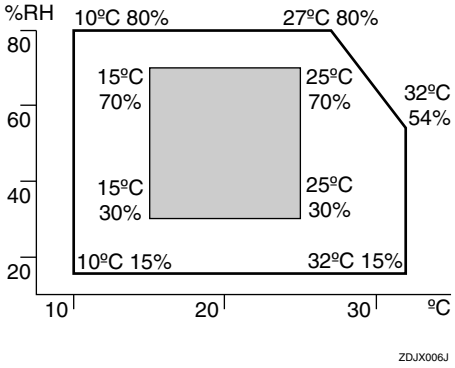

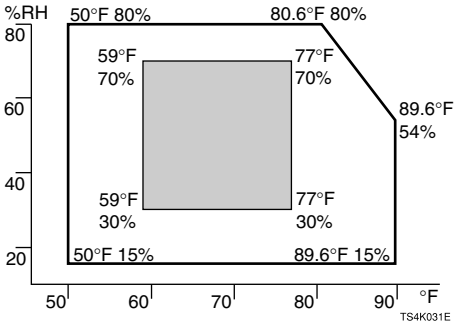

- White area: Possible operation Range
- Gray area: Recommended Range

Note

- ❒ The machine must be level within 5 mm, 0.2" both front to rear and left to right.
- ❒ To avoid possible build-up of ozone, locate this machine in a large well ventilated room that has an air turnover of more than 30 m^3/hr/person.
- ❒ When you use this machine for a long time in a confined space without good ventilation, you may notice an odd smell. To keep the workplace comfortable, we recommend that you keep it well ventilated.

❖ Environments to Avoid

Important

- ❒ Locations exposed to direct sunlight or strong light
- ❒ Dusty areas
- ❒ Areas with corrosive gases
- ❒ Areas excessively cold, hot, or humid
- ❒ Locations near an air conditioner or humidifier
- ❒ Locations near other electronic equipment
- ❒ Locations where the printer might be subjected to frequent strong vibration

❖ Power Source

Connect the power cable to a power source with the following specifications:

- 120 V, 60 Hz, 10 A or more

Checking the Contents of the Box

1 Check the contents of the box for the following items.

For missing items, contact your sales or service representative.

❖ **Manuals and CD-ROMs**

- ☐ Description form
- ☑ Setup Guide (This manual)
- ☐ Maintenance Guide 1
- ☐ Administrator Reference 1
- ☐ Printer Client Reference 1
- ☐ CD-ROM "Printer Driver and Utilities"
- ☐ CD-ROM "Operating Instructions"

❖ **Parts**

- ☐ External Tray

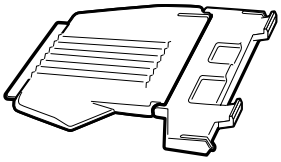

- ☐ Power Cable

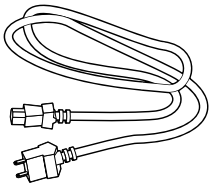

- ☐ Ferrite Core

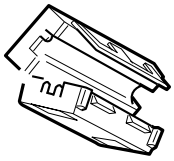

- ☐ Fuser Oil Unit

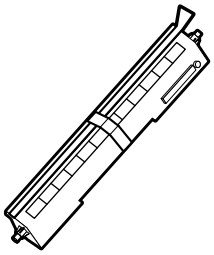

- Black Toner Cartridge (K)

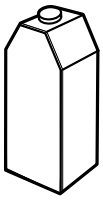

- Magenta (M), Cyan (C), Yellow (Y) Toner Cartridges

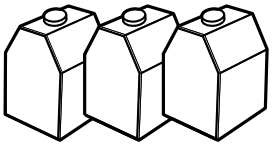

- Paper Feed Unit Labels

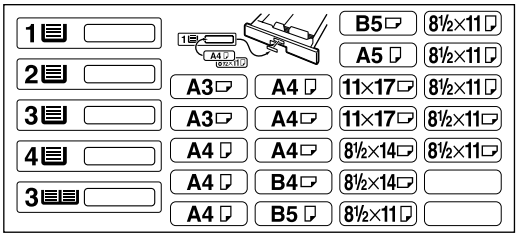

- Additional Documentations

Note

❒ This package does not include an interface cable. Please purchase one for use with your host computer. See "*Appendix*" in Administrator Reference 2.

Unpacking the Printer

1 **Remove the adhesive tape on the printer body. Remove the cardboard that is taped to the Standard Tray.**

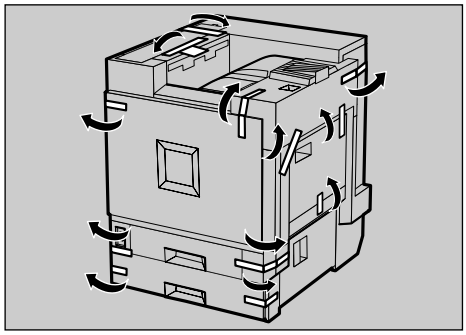

ZDJH001J

2 **Open Tray 1.**

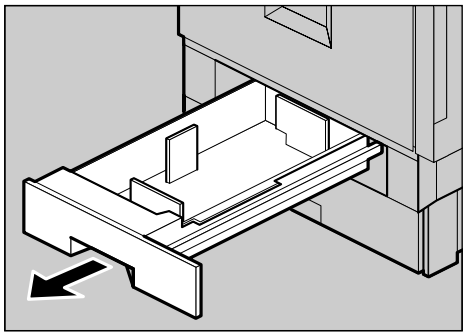

ZDJH003J

3 **Remove the adhesive tape and sheet of paper.**

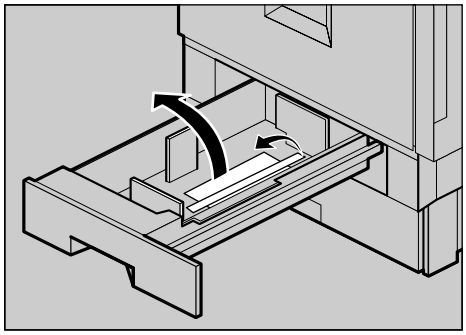

ZDJH004J

4 **Close Tray 1 slowly.**

5 **Open Tray 2.**

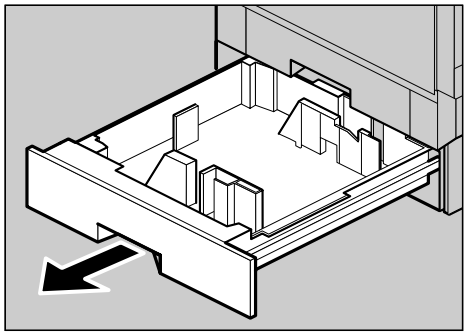

ZDJH005J

6 **Remove the adhesive tape and sheet of paper.**

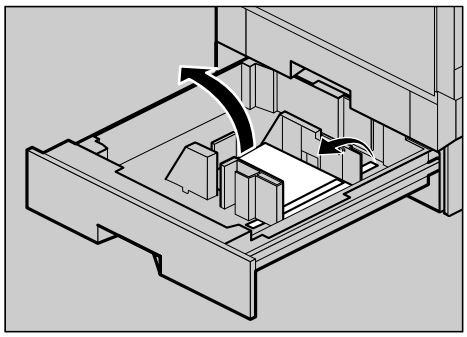

ZDJH006J

7 **Close Tray 2 slowly.**

8 **Open the front cover slowly by pulling down from the two areas on the left and right.**

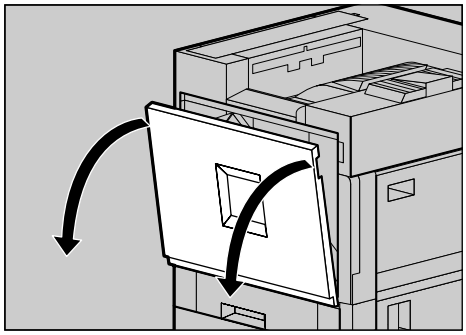

ZDJH007J

Important

- ❒ Do not place objects on the opened front cover.

9 **Remove the adhesive tape.**

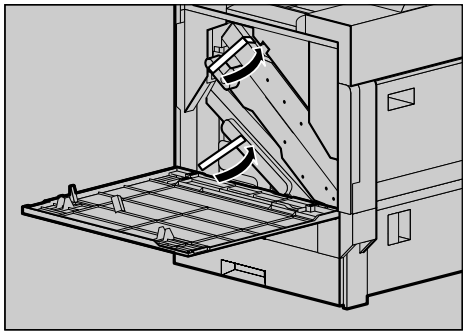

ZDJH008J

10 **Remove the securing pin, as shown in the illustration, from the Transfer Unit. Pinch it, and then pull it out.**

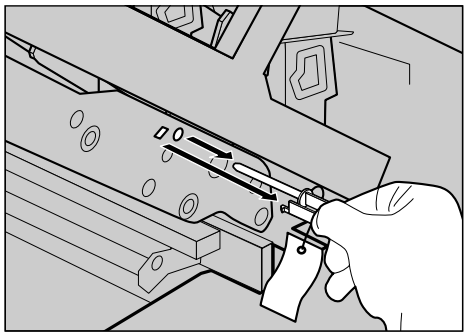

ZDJX450J

11 **Pull out the four pieces of tapes coming out from the Development Unit slowly, in a level manner.**

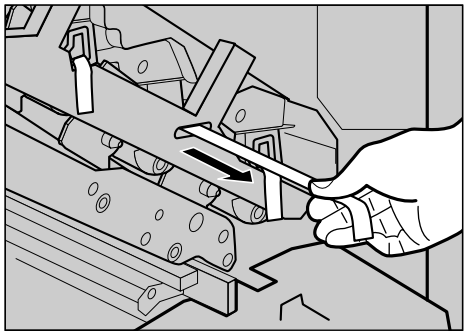

ZDJH702J

Important

- ❒ Be sure to pull out all four pieces of tapes to avoid printer malfunction during operation.
- ❒ The removed tape is dirty. Be careful not to let it touch your hands or clothes.

12 **Close the front cover slowly by pushing the two areas on the left and right.**

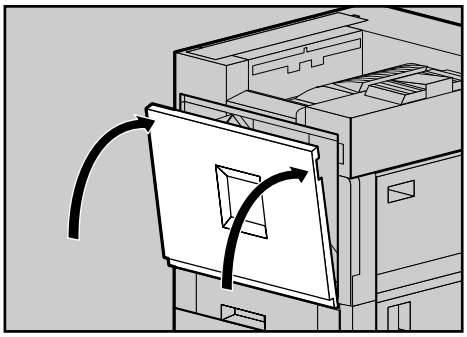

ZDJH041J

13 **Put labels "1" and "2" on the front of the paper trays.**

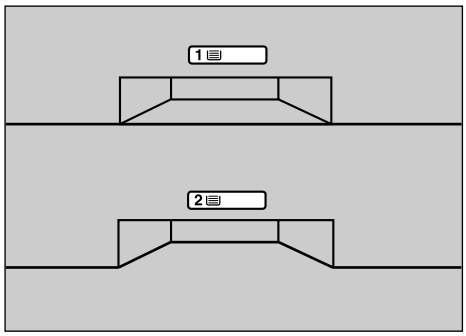

ZDJP129J

14 A sticker, stating that paper for an ink-jet printer cannot be used with this printer, is supplied. Please attach the sticker to the bottom right corner of the top of the printer [A] so that sticker is easy to see.

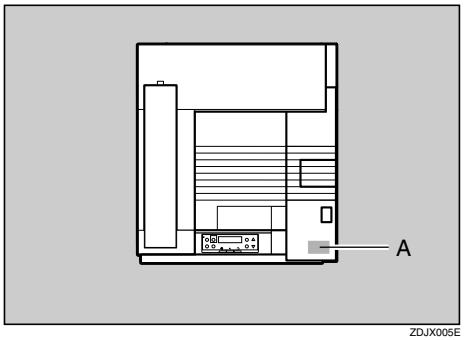

ZDJX005E

Installing the Fuser Oil Unit

Install the Fuser Oil Unit to the Fusing Unit.

1 Pull out the left cover slowly.

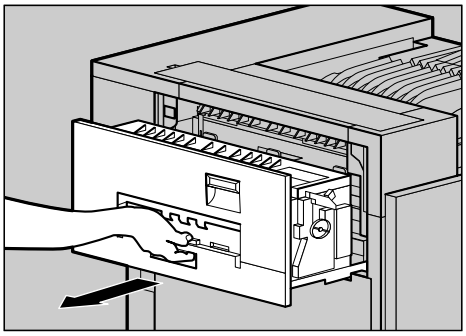

ZDJH047J

2 Open the upper left cover.

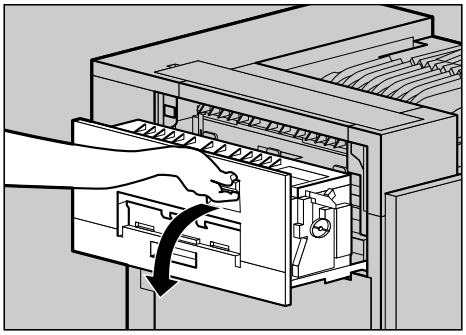

ZDJH048J

3 Holding the green handle, pull up the Fusing Unit slowly in the direction as shown in the illustration.

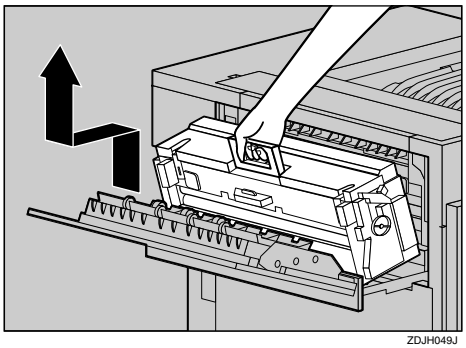

ZDJH049J

Important

- ❒ Do not touch any areas other than the handle.
- ❒ When replacing the fusing unit, do not turn the blue dial at the side of the new fusing unit until the power switch is turned on.

4 Put the removed Fusing Unit in a stable and level place.

5 Take out the Fuser Oil Unit from the bag, and remove seal (①), and then seal (②) as shown in the illustration.

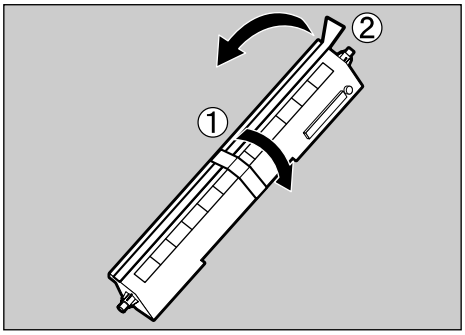

ZDJH053J

Note

- ❒ Be sure to remove seal (①), and then pull it out in a level manner.

Important

- ❒ Be sure to remove the seals to avoid printer malfunction.
- ❒ Be sure to remove seal (①) first, and then remove seal (②) to avoid an oil leak.
- ❒ There is oil on the removed seals. Be careful not to let them come in contact with your clothes.
- ❒ Be sure to put the Fusing Oil in a stable and level place.

2

6 Match (▲) on the front of the Fuser Oil Unit and the arrow on the Fusing Unit as shown in the illustration.

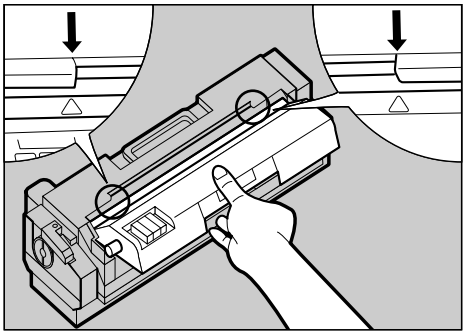

ZDJH055J

Important

- ❒ Be careful not to get oil on the metal point of the left side of the Fuser Oil Unit.

7 Insert the left and right protrusions of the Fuser Oil Unit into the white holders of the Fusing Unit (①), and then move the Fuser Oil Unit in the direction shown by the arrow (②) to attach the Fuser Oil Unit to the Fusing Unit.

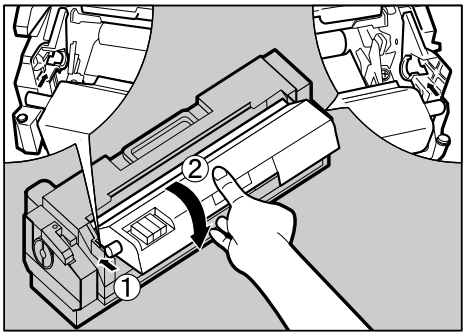

ZDJH054J

8 Holding the green handle with one hand, use your other hand to push the front area of the handle to a slight slant, and then push the Fusing Unit slowly to the back.

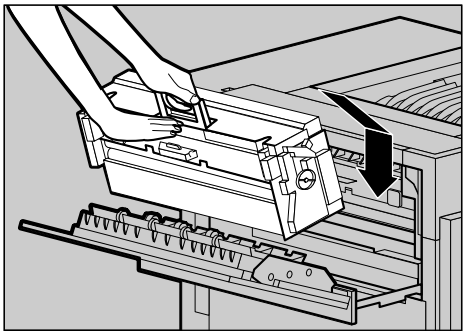

ZDJH050E

Confirm that the Fusing Unit is set to the printer vertically.

Note

- ❒ Confirm that the Fuser Oil Unit is facing the inside of the printer.

Important

- ❒ Confirm that the Fusing Unit is in appropriate position.

9 Close the upper left cover (①) and push the handle (②) slowly to the back until it clicks.

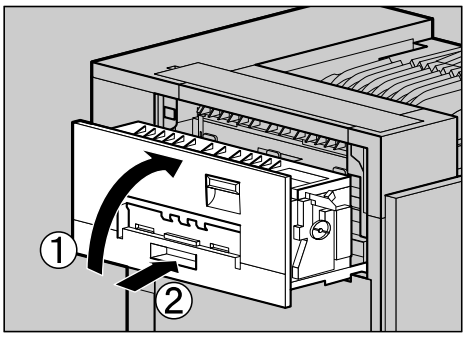

ZDJH051J

10 Attach the External Tray to the printer. Insert the hooks of the External Tray into the printer slits, and then lower it toward you.

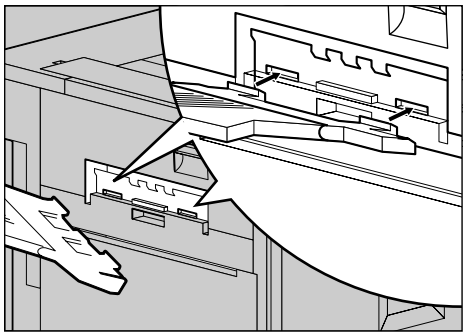

ZDJH010J

Installing Options

⚠ ***CAUTION:***

- *Before installing options, the machine should be turned off and unplugged for at least an hour. Components inside the machine become very hot, and can cause a burn if touched.*
- *Before moving the machine, unplug the power cable from the outlet. If the cable is unplugged abruptly, it could become damaged. Damaged plugs or cables can cause an electrical or fire hazard.*
- *When lifting the machine, use the grips on both sides. The machine could break or cause an injury if dropped.*

By installing options, you can improve the printer performance and have an expanded variety of features to use. For details on each option, see Administrator Reference 2.

Important

❒ For installing options with Scanner Unit being installed, contact your sales or service representative.

❒ Rating voltage of the connector for options: Max. DC 24 V.

When installing multiple options on the printer, we recommend the following order of installation.

❖ Flow of Option Installation

1 Install the 500, 1000-sheet Paper Feed Unit, or 2000-sheet Large Capacity Tray. (PAPER FEED UNIT Type 3800C, Paper Bank PS 470) ▼	Install the Paper Feed Unit to the bottom of the printer. You can choose to install the PAPER FEED UNIT Type 3800C (500 × 1), Type 3800C (500 × 2) or Paper Bank PS470. If you install the Paper Bank PS470, you can load up to 3,100 sheets of paper at once.
2 Install the SDRAM Module. (Memory Unit TypeB) ▼	Attach the module to the SDRAM module slot of the Controller Board. There are three types of Memory Unit TypeB, 64MB, 128MB, 256MB.
3 Install the 1394 Interface Unit. (1394 Interface Unit Type1045) ▼	Attach the 1394 Interface Unit Type 1045 to the 1394 I/F slot of the Controller Board. The 1394 Interface Unit requires optional Memory Unit at least 64 MB (Total memory size 128 MB or more).
4 Install the User Account Enhance Unit Type B. ▼	Attach the module to the User Account Enhance Unit slot of the Controller Board.

5 Install the Printer Hard Disk. (Printer Hard Disk Type 3800C) ▼	Attach the Printer Hard Disk Type 3800C to the Controller Board.
6 Install the Duplex Unit. (Duplex Unit Type 3800C) ▼	Attach the Duplex Reversal Unit to the left side of the printer, and the Duplex Feed Unit inside the printer.
7 Install the 2 Tray Finisher. (SR770) ▼	Attach the SR770 to the left side of the printer. You cannot install the SR770 unless both the Paper Feed Unit and Duplex Unit options are installed. If you choose to install the 4-bin Mailbox, you cannot install the SR770. The 2 Tray Finisher requires the optional Printer Hard Disk or the optional Memory Unit at least 128 MB (Total memory size 160 MB or more).
8 Install the 4-bin Mailbox. (Mail Bin Type 3800C)	Remove the upper cover to install Mail Bin Type 3800C. If you choose to install the 2 Tray Finisher, you cannot install the 4-bin Mailbox.

Install options in the positions as shown in the illustration.

❖ Exterior

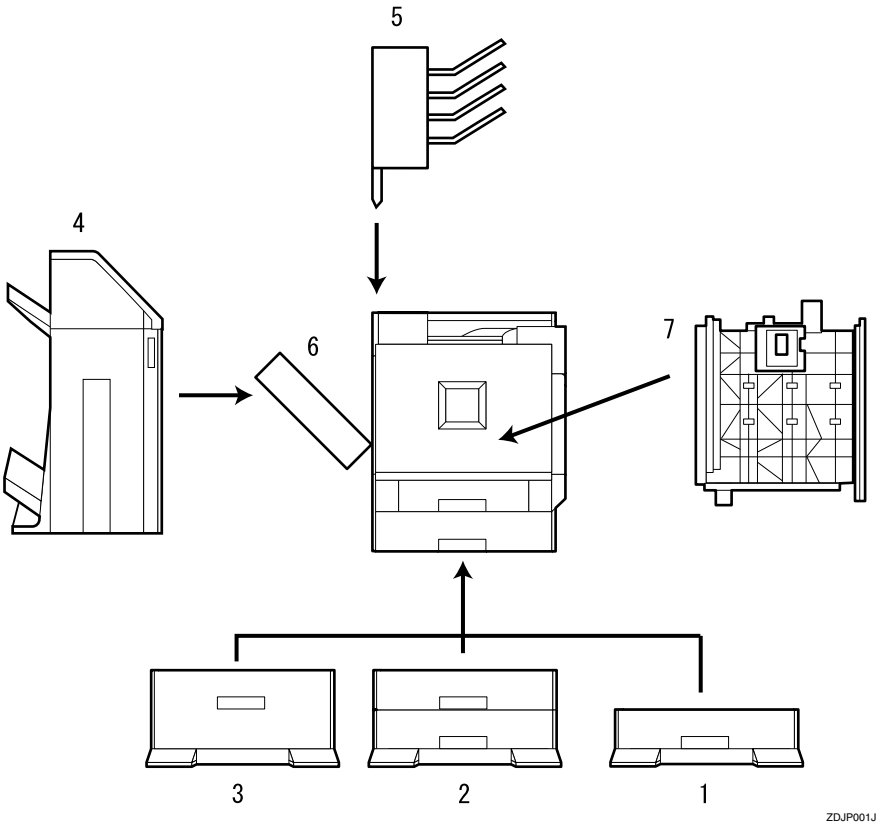

1. PAPER FEED UNIT Type 3800C (500 × 1)

Loads up to 500 sheets (500 sheets × 1 column) of paper.

⇒ p.23 "Installing the PAPER FEED UNIT Type 3800C (500 x 1)"

2. PAPER FEED UNIT Type 3800C (500 × 2)

Loads up to 1,000 sheets (500 sheets × 2 columns) of paper.

⇒ p.25 "Installing the PAPER FEED UNIT Type 3800C (500 x 2)"

3. Paper Bank PS470 (2000-sheet Large Capacity Tray)

Loads up to 2,000 sheets (2,000 sheets × 1 column) of paper.

⇒ p.28 "Installing the Paper Bank PS470 (2000-sheet Large Capacity Tray)"

4. SR770 (2 Tray Finisher)

Performs Job Separation, staples and punches holes. Install the Finisher on the left side of the printer.

⇒ p.48 "Installing the SR770 (2 Tray Finisher)"

5. Mail Bin Type 3800C (4-bin Mailbox)

Sorts printed documents from multiple users. Attach the Mailbox to the top of the printer.

⇒ p.55 "Installing the Mail Bin Type 3800C (4-bin Mailbox)"

6. Duplex Reversal Unit

Flips over the paper during duplex printing. Install the unit on the left side of the printer.

⇒ p.45 "Installing the Duplex Reversal Unit"

7. Duplex Feed Unit

Transports the paper during duplex printing. Install the unit inside the printer.

⇒ p.45 "Installing the Duplex Reversal Unit"

Important

- ❒ You cannot install the 2 Tray Finisher unless both the Paper Feed Unit and Duplex Unit options are installed.
- ❒ You cannot install the 2 Tray Finisher unless at least the 128 MB SDRAM Module is installed, or the Printer Hard Disk is installed.
- ❒ You cannot install both the 2 Tray Finisher and 4-bin Mailbox at the same time.

❖ Interior

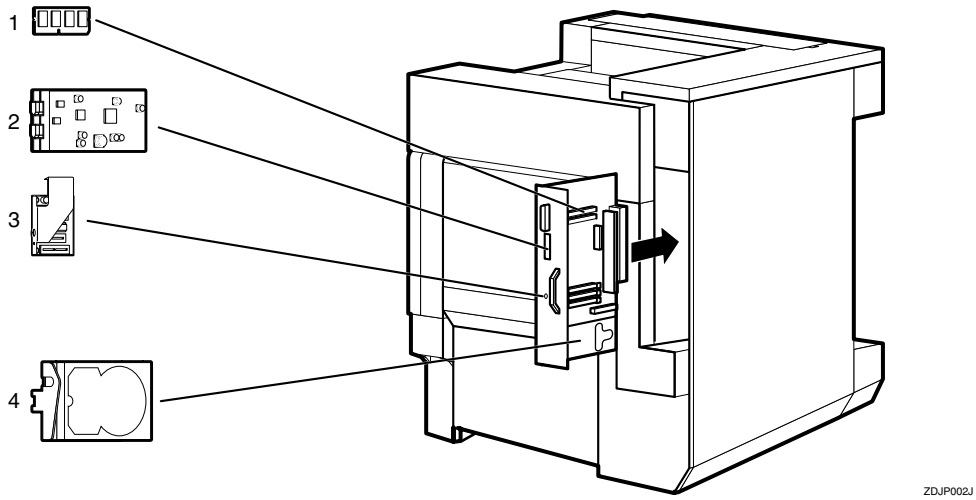

1. Memory Unit Type B (SDRAM Module)

Attach 64MB, 128MB, or 256MB RAM into the slot of the Controller Board.

⇒ p.30 "Installing the Memory Unit Type B (SDRAM Module)"

2. 1394 Interface Unit Type1045

⇒ p.32 "Installing the 1394 Interface Unit Type1045"

3. User Account Enhance Unit Type B

⇒ p.36 "Installing the User Account Enhance Unit TypeB"

4. Printer Hard Disk Type 3800C

Attach Printer Hard Disk to the Controller Board.

⇒ p.39 "Installing the Printer Hard Disk Type 3800C"

Important

- ❒ You cannot install the 1394 Interface Unit Type1045 unless at least 64MB SDRAM Module is installed.

How to Use the Screwdriver

The exclusive screwdriver used for attaching options is attached to the inside of the front cover. By pushing the screw top into the screwdriver, you can work without having to worry about dropping the screw.

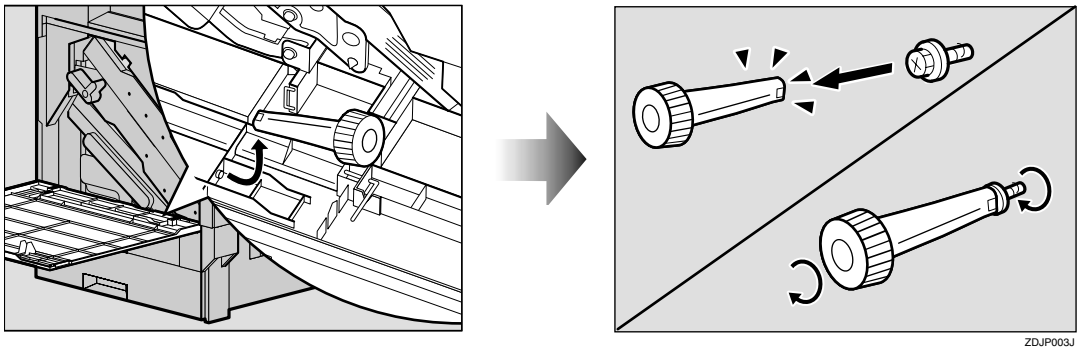

Note

❒ After using the screwdriver, return it to its original position on the inside of the front cover.

Installing the Paper Feed Unit

Preparation

If you want to use the optional Duplex Unit, 2 Tray Finisher or 4-bin Mailbox at the same time, install the optional Paper Feed Unit first, and then install these options.

If you have already installed the optional Duplex Unit, 2 Tray Finisher and 4-bin Mailbox, remove all these options before installing the optional Paper Feed Unit.

Important

❒ Before installation, check the orientation of the Paper Feed Unit or 2000-sheet Large Capacity Tray you want to place.

❒ When installing multiple options, install the Paper Feed Unit first.

❒ Four persons are needed to install the Paper Feed Unit. Start the installation work after all four persons are ready.

⚠ ***CAUTION:***

- *When moving the machine, each person should hold the handle, where two are located on opposite sides, and lift slowly. Lifting it carelessly or dropping it may cause an injury.*

Note

❒ The printer weights approximately 82 kg (181 lbs).

Installing the PAPER FEED UNIT Type 3800C (500 x 1)

Preparation

If you want to use the optional Duplex Unit, 2 Tray Finisher or 4-bin Mailbox at the same time, install the optional Paper Feed Unit first, and then install these options.

If you have already installed the optional Duplex Unit, 2 Tray Finisher and 4-bin Mailbox, remove all these options before installing the optional Paper Feed Unit.

Important

- ❒ Before installation, check the orientation of the Paper Feed Unit you want to place.
- ❒ When installing multiple options, install the Paper Feed Unit first.

⚠ CAUTION:

- *When moving the Paper Feed Unit, hold the bottom of both sides, and lift slowly. Lifting it carelessly or dropping it may cause an injury.*

Note

- ❒ The 500-sheet Paper Feed Unit weights approximately 18kg (39.7 lbs).

1 Turn off the power switch and unplug the power cable.

2 Remove the adhesive tape.

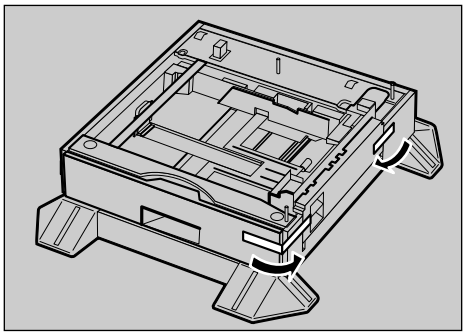

ZDJP004J

3 Adjust the four corners of the printer to those of the 500-sheet Paper Feed Unit, and then lower the printer slowly into place.

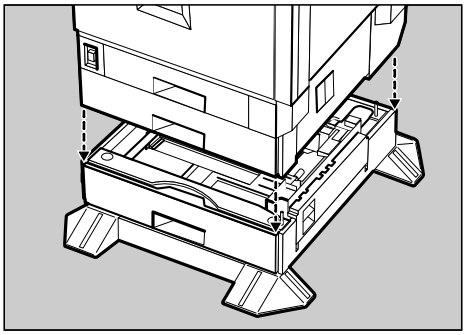

ZDJP006J

Important

- ❒ Four persons should hold the handles, located on two sides of the printer, to move it.

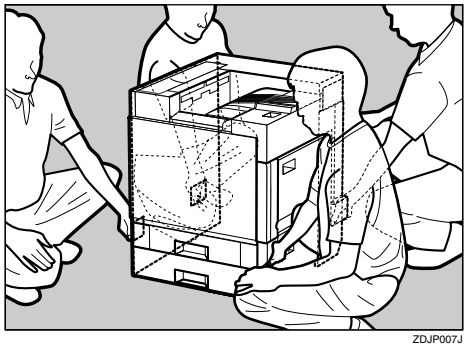

ZDJP007J

4 **Open the tray of the 500-sheet Paper Feed Unit.**

❶ **Remove the adhesive tape and sheet of paper.**

❷ **Remove the adhesive tape and the corrugated paper inside the tray as shown in the illustration.**

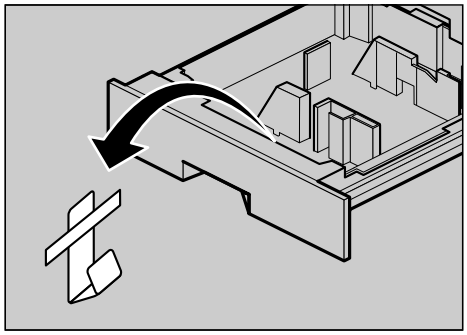

ZDJX801J

5 **Take out the packaged items, making sure there are two thumb screws and one mounting bracket. Close the tray of the 500-sheet Paper Feed Unit tightly.**

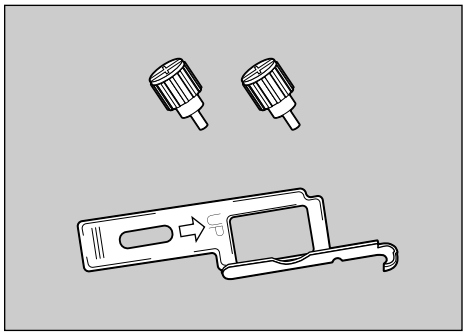

ZDJP005J

6 **Pull out Tray 2 slowly while lifting it up a little.**

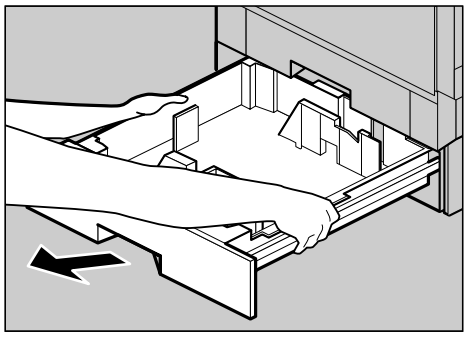

ZDJP008J

7 **Fasten one thumb screw. Use a coin to fasten it tightly.**

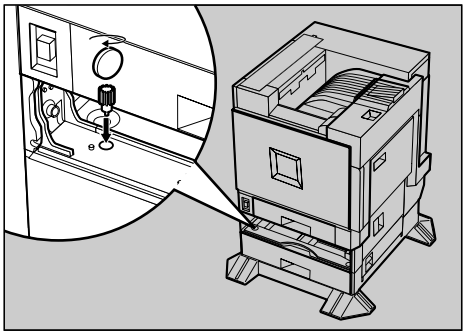

ZDJP009J

8 **Slide Tray 2 back into the printer slowly until it stops.**

9 **Open the right cover of the 500-sheet Paper Feed Unit.**

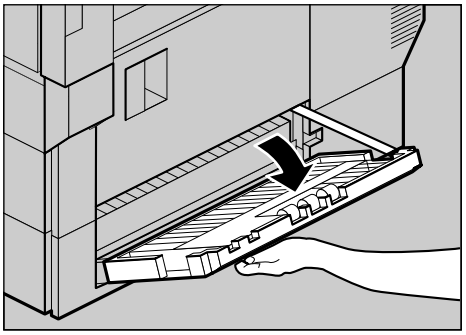

ZDJP010J

10 **Hook the mounting bracket to the hole as shown in the illustration.**

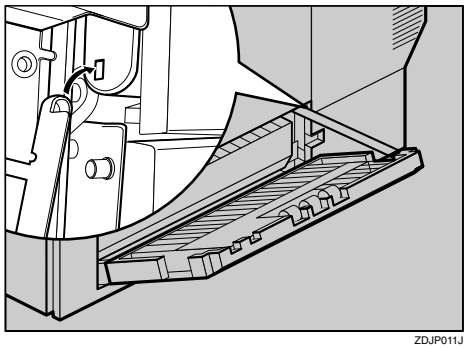

ZDJP011J

11 Fasten the bracket with the other thumb screw. Use a coin to fasten it tightly.

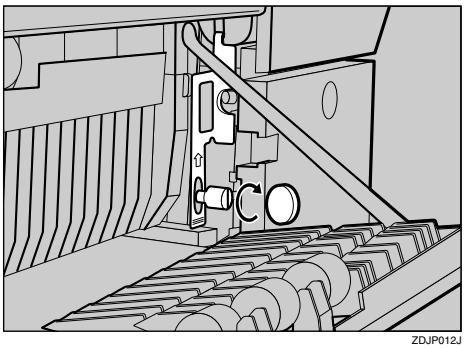

ZDJP012J

12 Close the right cover of the 500-sheet Paper Feed Unit.

13 Stick label "3" above the handle on the front of the 500-sheet Paper Feed Unit.

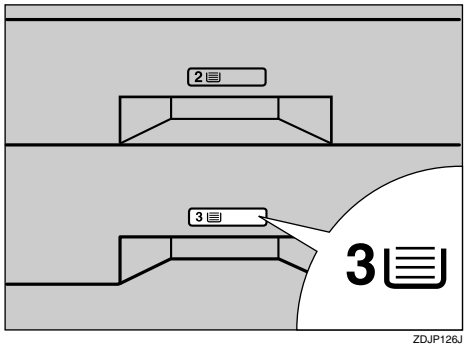

ZDJP126J

Note

❒ After finishing all installation for printing, you can check whether the 500-sheet Paper Feed Unit is installed properly. Print the Configuration Page from the "List/Test Print" menu. If it is installed properly, you will see "Paper Feed Unit (Tray 3)" under the "Options" list.

❒ If the Paper Feed Unit is not installed properly, reinstall from step 1. If you cannot install it properly even after reinstallation, contact your sales or service representative.

Reference

⇒ p.69 “Test Printing”.

Installing the PAPER FEED UNIT Type 3800C (500 x 2)

Preparation

If you want to use the optional Duplex Unit, 2 Tray Finisher or 4-bin Mailbox at the same time, install the optional Paper Feed Unit first, and then install these options.

If you have already installed the optional Duplex Unit, 2 Tray Finisher and 4-bin Mailbox, remove all these options before installing the optional Paper Feed Unit.

Important

❒ Before installation, check the orientation of the Paper Feed Unit you want to place.

❒ When installing multiple options, install the Paper Feed Unit first.

CAUTION:

- *When moving the Paper Feed Unit, hold the bottom of both sides, and lift slowly. Lifting it carelessly or dropping it may cause an injury.*

Note

❒ The 1000-sheet Paper Feed Unit weights approximately 25kg (55.2 lbs).

1 Turn off the power switch and unplug the power cable.

2 **Remove the adhesive tape.**

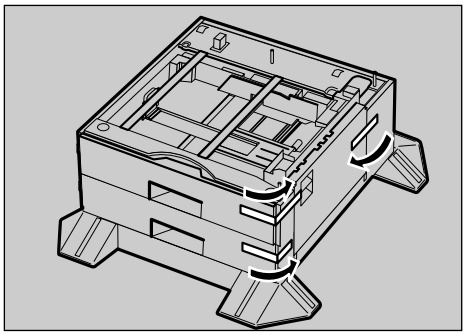

ZDJP013J

3 **Adjust the four corners of the printer to those of the 1000-sheet Paper Feed Unit, and then lower the printer slowly into place.**

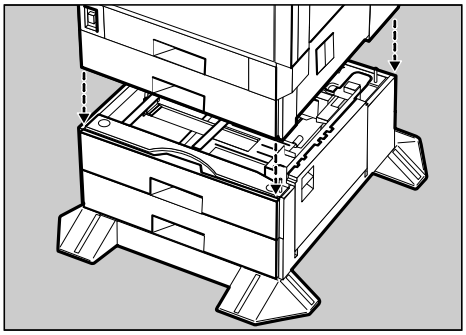

ZDJP014J

Important

- ❒ Four persons should hold the handles, located on two sides of the printer, to move it.

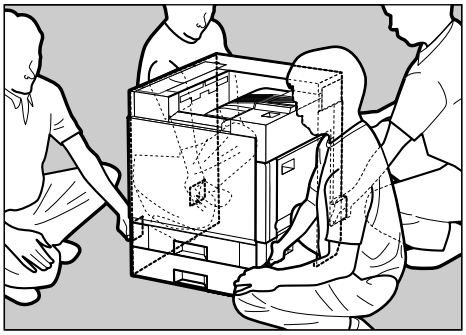

ZDJP007J

4 **Open the tray of the 1000-sheet Paper Feed Unit.**

❶ **Remove the adhesive tape and sheet of paper.**

❷ **Remove the adhesive tape and the corrugated paper inside the tray as shown in the illustration.**

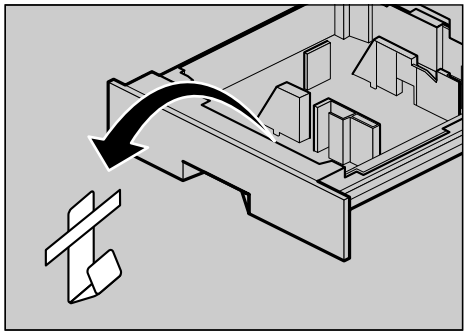

ZDJX801J

5 **Take out the packaged items, making sure there are two thumb screws and one mounting bracket. Close the tray of the 1000-sheet Paper Feed Unit tightly.**

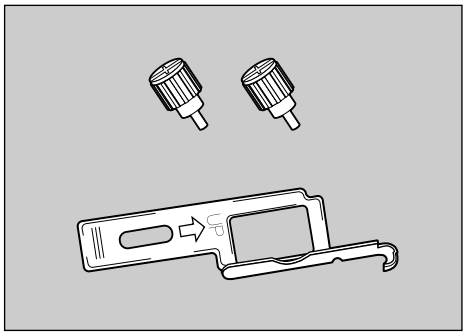

ZDJP005J

6 **Pull out Tray 2 slowly while lifting it up a little.**

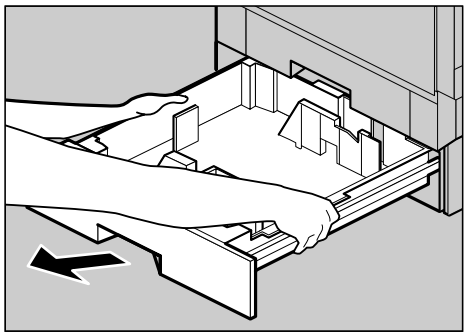

ZDJP008J

7 **Fasten one thumb screw. Use a coin to fasten it tightly.**

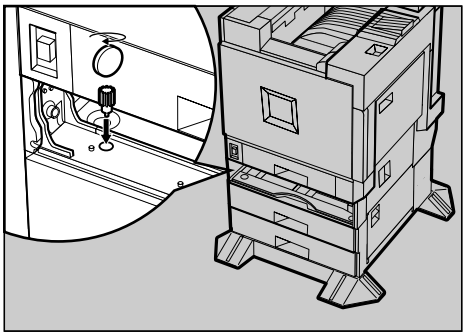

ZDJP015J

8 **Slide Tray 2 back into the printer slowly until it stops.**

9 **Open the right cover of the 1000-sheet Paper Feed Unit.**

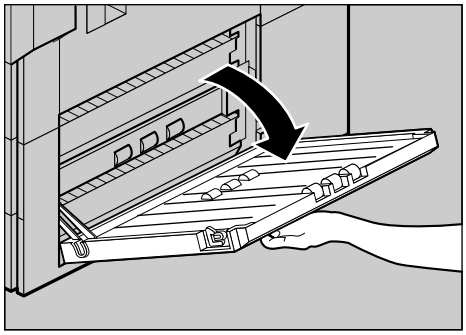

ZDJP016J

10 **Hook the mounting bracket to the hole as shown in the illustration.**

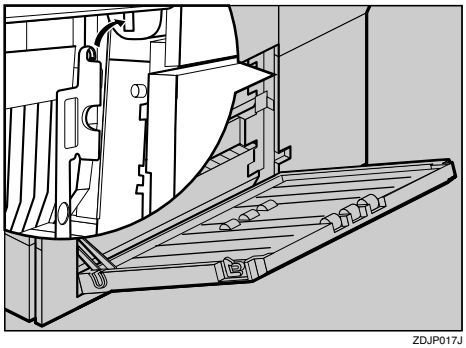

ZDJP017J

11 **Fasten the bracket with the other thumb screw. Use a coin to fasten it tightly.**

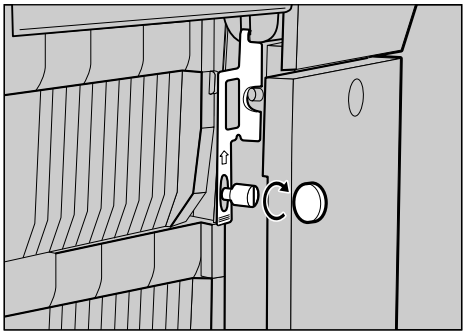

ZDJP018J

12 **Close the right cover of the 1000-sheet Paper Feed Unit.**

13 **Stick labels "3" and "4" above the handles on the front of the 1000-sheet Paper Feed Unit.**

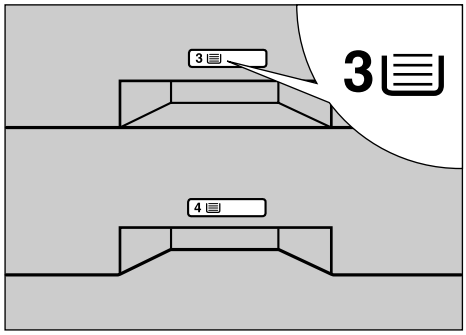

ZDJP127J

Note

❒ After finishing all installation for printing, you can check whether the 1000-sheet Paper Feed Unit is installed properly. Print the Configuration Page from the "List/Test Print" menu. If it is installed properly, you will see "Paper Feed Unit (Tray 3 & Tray 4)" under the "Options" list.

❒ If the Paper Feed Unit is not installed properly, reinstall from step 1. If you cannot install it properly even after reinstallation, contact your sales or service representative.

Reference

⇒ p.69 "Test Printing".

2

Installing the Paper Bank PS470 (2000-sheet Large Capacity Tray)

Preparation

If you want to use the optional Duplex Unit, 2 Tray Finisher or 4-bin Mailbox at the same time, install the optional 2000-sheet Large Capacity Tray first, and then install these options.

If you have already installed the optional Duplex Unit, 2 Tray Finisher and 4-bin Mailbox, remove all these options before installing the optional 2000-sheet Large Capacity Tray.

Important

❒ Before installation, check the orientation of the 2000-sheet Large Capacity Tray you want to place.

❒ When installing multiple options, install the Paper Feed Unit first.

⚠ ***CAUTION:***

- *When moving the Paper Feed Unit, hold the bottom of both sides, and lift slowly. Lifting it carelessly or dropping it may cause an injury.*

Note

❒ The 2000-sheet Large Capacity Tray weights approximately 25kg (55.2 lbs).

1 Turn off the power switch and unplug the power cable.

2 Remove the adhesive tape.

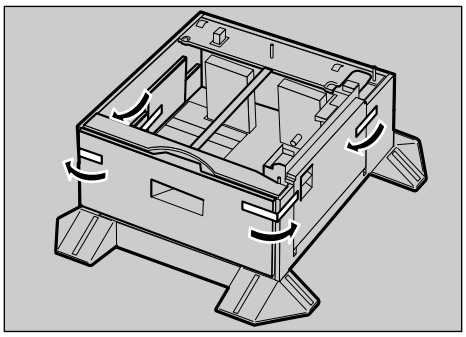

ZDJP019J

3 Adjust the four corners of the printer to those of the 2000-sheet Large Capacity Tray, and then lower the printer slowly into place.

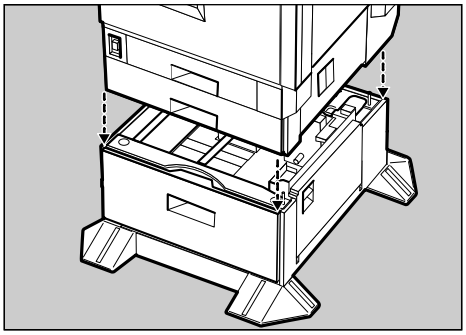

ZDJP020J

Important

❒ Four persons should hold the handles, located on two sides of the printer, to move it.

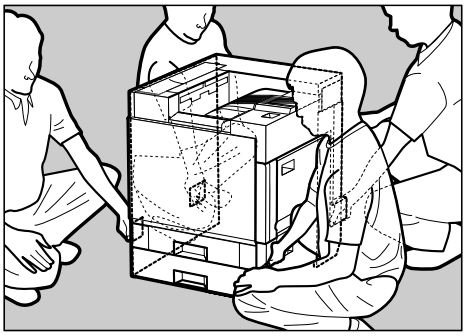

ZDJP007J

4 **Take out the packaged items, making sure there are two thumb screws and one mounting bracket. Close the tray of the 2000-sheet Large Capacity Tray tightly.**

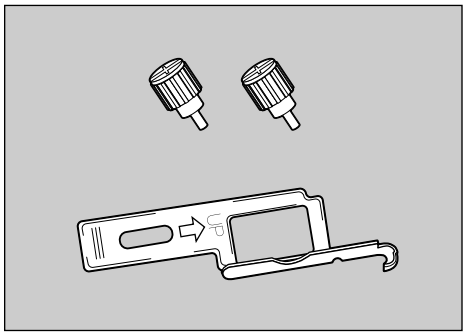

ZDJP005J

5 **Pull out Tray 2 slowly while lifting it up a little.**

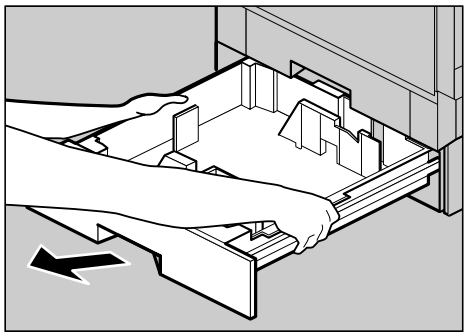

ZDJP008J

6 **Fasten one thumb screw. Use a coin to fasten it tightly.**

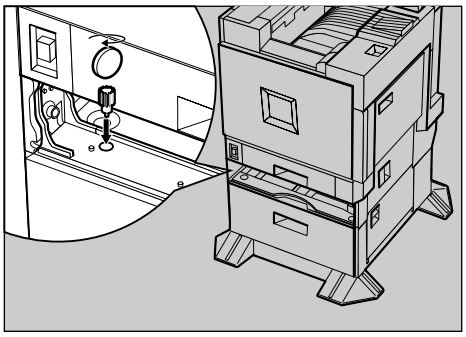

ZDJP021J

7 **Slide Tray 2 back into the printer slowly until it stops.**

8 **Open the right cover of the 2000-sheet Large Capacity Tray.**

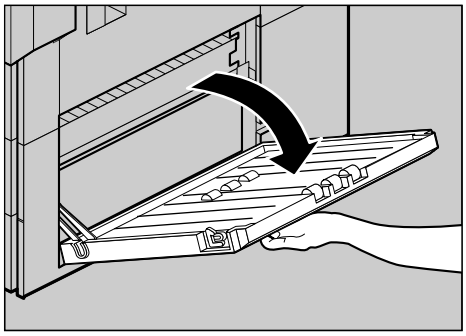

ZDJP022J

9 **Hook the mounting bracket to the hole as shown in the illustration.**

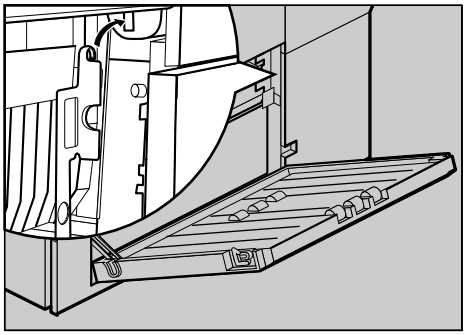

ZDJP023J

10 **Fasten the bracket with the other thumb screw. Use a coin to fasten it tightly.**

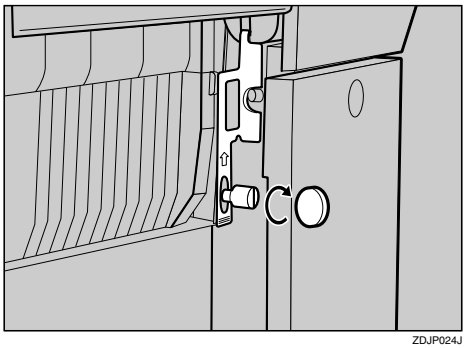

ZDJP024J

11 **Close the right cover of the 2000-sheet Large Capacity Tray.**

12 Stick label "3" above the handle on the front of the 2000-sheet Large Capacity Tray.

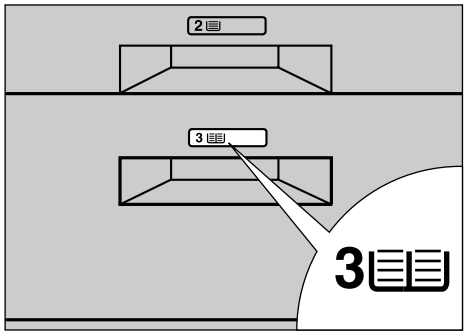

ZDJP128J

Note

- ❒ After finishing all installation for printing, you can check whether the 2000-sheet Large Capacity Tray is installed properly. Print the Configuration Page from the "List/Test Print" menu. If it is installed properly, you will see "LCT Tandem Bank" under the "Options" list.
- ❒ If the Paper Feed Unit is not installed properly, reinstall from step **1**. If you cannot install it properly even after reinstallation, contact your sales or service representative.

Reference

⇒ p.69 “Test Printing”.

Installing the Memory Unit Type B (SDRAM Module)

Important

- ❒ Be sure to touch a metal object before touching the Memory Unit to discharge static electricity. Even a small amount of static electricity can damage the unit.
- ❒ Do not subject the SDRAM Module to physical shocks.

1 Turn off the power switch and unplug the power cable.

2 Remove two screws that are fastening the Controller Board on the back of the printer using provided screwdriver.

Reference

See p.22 “How to Use the Screwdriver”.

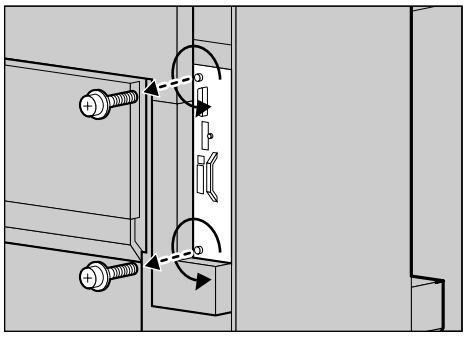

ZDJP025J

The removed screws will be used later to fasten the Controller Board.

3 **Holding the handle, pull out the Controller Board slowly.**

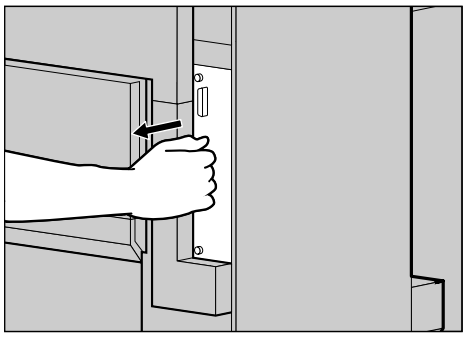

ZDJP025J

4 **Put the Controller Board in a flat place.**

5 **Open the locks on the left and right sides of the open slot.**

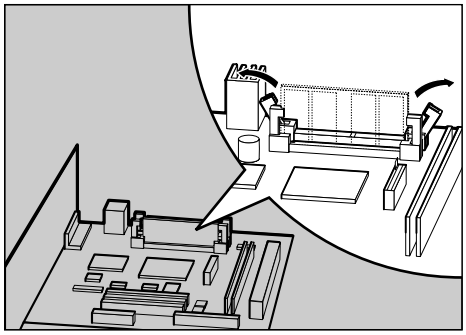

ZDJP027J

6 **Adjust the notch of the Memory Unit to the slot and insert vertically.**

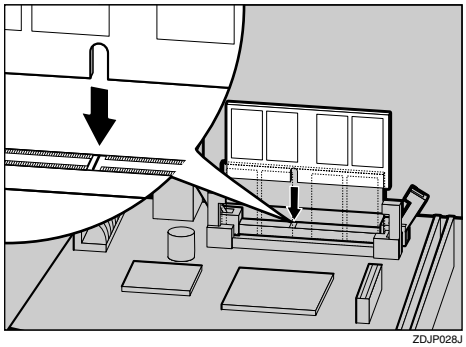

ZDJP028J

7 **Keep pressing the Memory Unit down until it clicks into the locked position.**

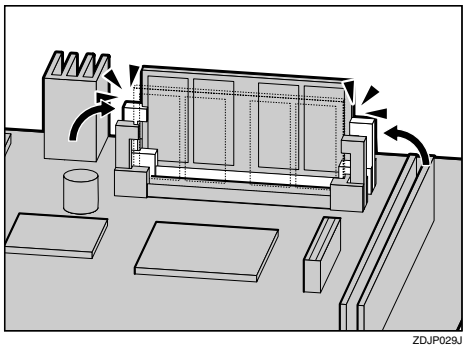

ZDJP029J

8 **Adjust the Controller Board to the top and bottom rails, and push in slowly until it stops.**

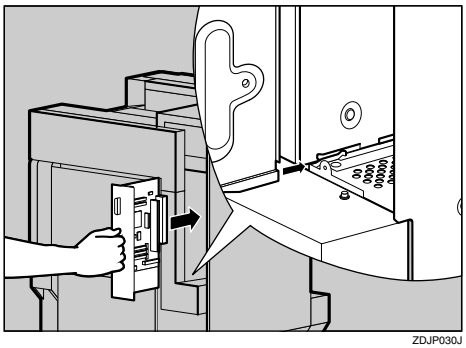

ZDJP030J

Insert the Controller Board firmly by pushing the left area as shown in the illustration.

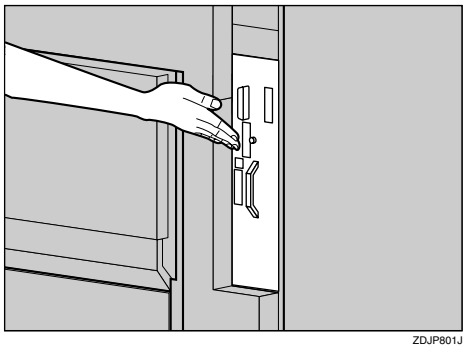

ZDJP801J

2

9 Tighten two screws to fasten the Controller Board back into its original position using provided screwdriver.

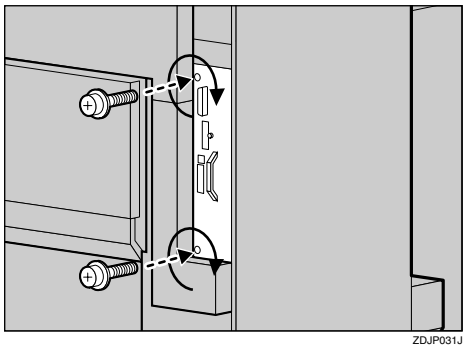

ZDJP031J

Note

- ❒ Be sure to return the provided screwdriver to its original position on the inside of the front cover.

Note

- ❒ After finishing all installation for printing, you can check whether the Memory Unit is installed properly. Print the Configuration Page from the "List/Test Print" menu. If it is installed properly, you will see the memory capacity for "Total Memory".
- ❒ If the Memory Unit is not installed properly, reinstall from step 1. If you cannot install it properly even after reinstallation, contact your sales or service representative.

Reference

See p.69 “Test Printing”.

Installing the 1394 Interface Unit Type1045

Important

- ❒ Windows 2000 is the only operating system that can output to a printer with the 1394 Interface Unit.
- ❒ Outputting is not possible with Windows 95, 98, or Me. If the "plug and play" function starts, click **[Cancel]**.
- ❒ The 1394 Interface Unit Type1045 requires the optional Memory Unit at least 64 MB or more.
- ❒ In Windows 2000, the 1394 Interface Unit can only be used with Service Pack 1 or later. If the Service Pack is not installed, the connectable number of devices in a 1394 bus is only one, and the client cannot access the 1394 Interface Unit without using an account that has the Administrators permission.
- ❒ The 1394 Interface Unit cannot receive data from more than one PC at the same time. If it happens, an error message appears. The printer can accept data sent from other PCs only after the first print job has finished.
- ❒ Bidirectional transmissions are not supported by the 1394 Interface Unit.
- ❒ Be sure to touch a metal object before touching the 1394 Interface Unit to discharge static electricity. Even a small amount of static electricity can damage the unit.
- ❒ Do not subject the 1394 Interface Unit to physical shocks.

- ❒ Do not loop the 1394 interface cable.
- ❒ Use the 1394 Interface cable that comes with 1394 Interface Unit.

Reference

For more information, see the Manual that comes with the 1394 Interface Unit.

1 Check the contents of the box.

❖ **1394 Interface Unit Type1045**

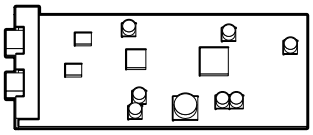

❖ **Four Screws**

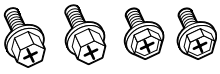

❖ **Interface Cable (6 pin × 6 pin)**

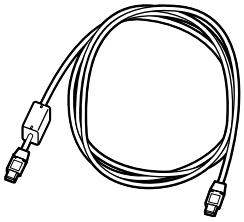

❖ **Interface Cable (6 pin × 4 pin)**

Note

- ❒ Use the screwdriver attached to the inside of the front cover of the machine for two screws.
- ❒ You will not use the two smaller screws.

2 Turn off the power switch and unplug the power cable and interface cable.

3 Remove two screws that are fastening the Controller Board on the back of the printer using provided screwdriver.

Reference

See p.22 "How to Use the Screwdriver".

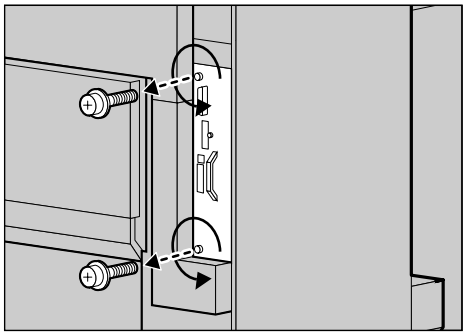

The removed screws will be used later to fasten the Controller Board.

4 Holding the handle, pull out the Controller Board slowly.

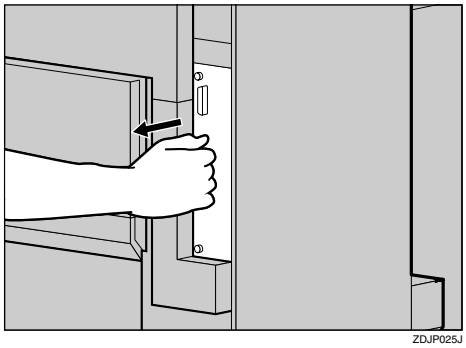

5 Put the Controller Board in a flat place.

6 Remove the small cover plate using provided screwdriver as shown in the illustration.

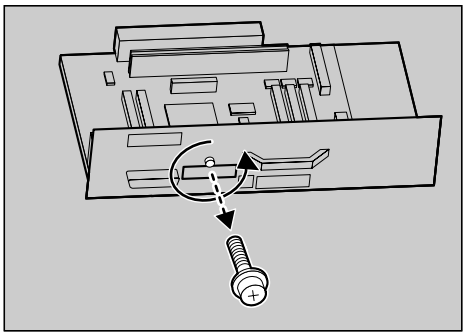

ZDJP122E

Note

❒ You will not use the removed screws.

7 Install the 1394 Interface Unit on the Controller Board. Insert the tip of the 1394 Interface Unit into the attachment area (①), and push it in the direction of the arrow (②).

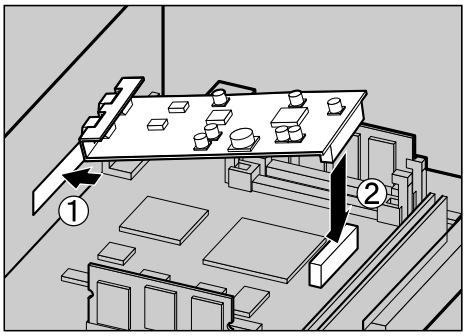

ZDJP120J

Confirm that the 1394 Interface Unit is connected firmly to the Controller Board.

8 Tighten two screws to fasten the 1394 Interface Unit using provided screwdriver.

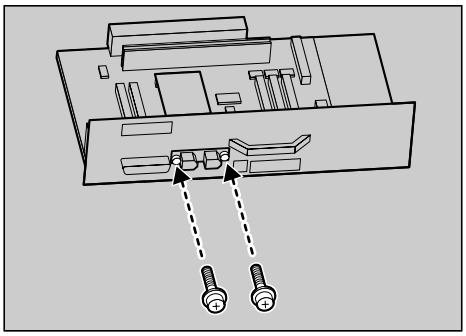

ZDJP123E

9 Insert the Controller Board into the top and bottom rails, and slide it in slowly until it stops.

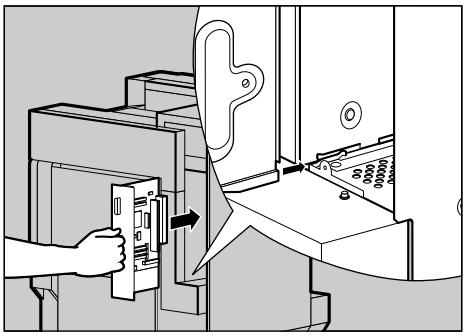

ZDJP030J

Insert the Controller Board firmly by pushing the left area as shown in the illustration.

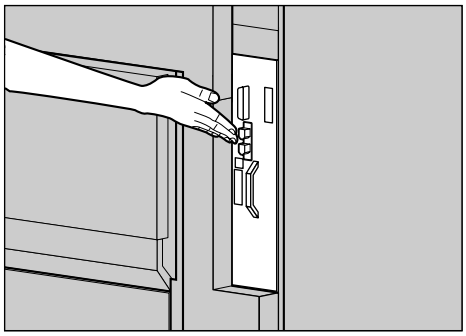

ZDJP802J

10 Tighten two screws to fasten the Controller Board back into its original position using provided screwdriver.

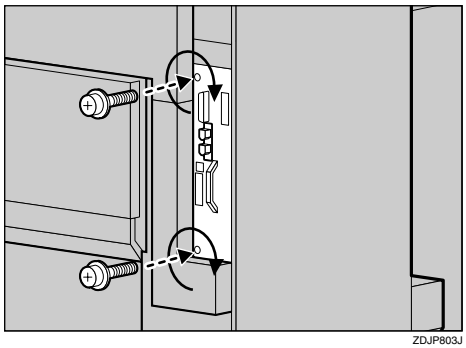

ZDJP803J

Note

- ❒ Be sure to return the provided screwdriver to its original position on the inside of the front cover.

Note

- ❒ After finishing all installation for printing, you can check whether the 1394 Interface Unit is installed properly. Print the Configuration Page from the "List/Test Print" menu. If it is installed properly, you will see "Installed" for "IEEE1394".
- ❒ If the 1394 Interface Unit is not installed properly, "Not Installed" is shown. In such a case, reinstall from step 1. If you cannot install it properly even after reinstallation, contact your sales or service representative.

Reference

See p.69 “Test Printing”.

11 Check for spare parts. You will not use these spare parts.

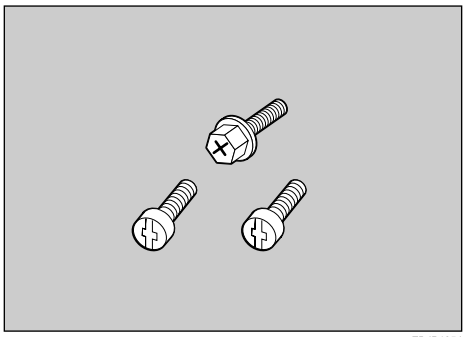

ZDJP135J

Connecting the cable to the 1394 Interface Unit

1 Connect the interface cable to the 1394 interface port.

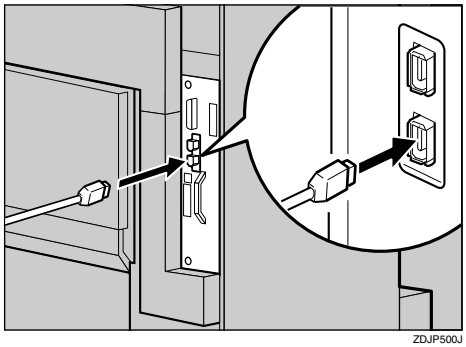

ZDJP500J

Note

- ❒ Either connector can be used.
- ❒ If you use a 6 pin × 6 pin interface cable, connect the end with the ferrite core to the printer.

2 Connect the other end to the host computer.

Installing the User Account Enhance Unit TypeB

⚠ ***CAUTION:***

- *Do not place the IC2 lithium battery near or into fire, or it will explode and cause a burn.*
- *The User Account Enhance Unit installed on the controller has a IC2 lithium battery which can explode if replaced incorrectly. Replace the User Account Enhance Unit only with the indicated one.*

Note

❒ Disposal should take place at an authorized dealer or an appropriate collection site. An IC2 lithium battery is inside the User Account Enhance Unit.

❒ If you are disposing the Unit, separate the IC2 lithium battery from the board and dispose of them according to local regulations.

Important

❒ Be sure to touch a metal object before touching the User Account Enhance Unit to discharge static electricity. Even a small amount of static electricity can damage the unit.

❒ Do not subject the User Account Enhance Unit to physical shocks.

1 **Check the contents of the box.**

❖ **User Account Enhance Unit**

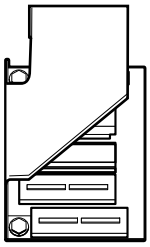

❖ **One Screw**

2 **Turn off the power switch and unplug the power cable.**

3 **Remove two screws that are fastening the Controller Board on the back of the printer using provided screwdriver.**

Reference

See p.22 "How to Use the Screwdriver".

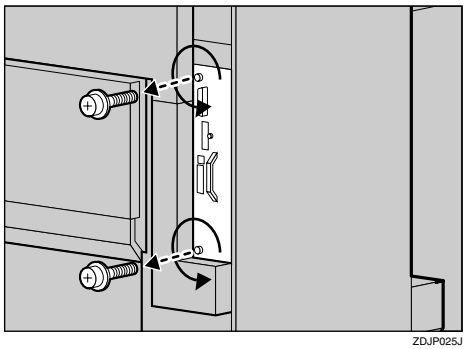

The removed screws will be used later to fasten the Controller Board.

4 Holding the handle, pull out the Controller Board slowly.

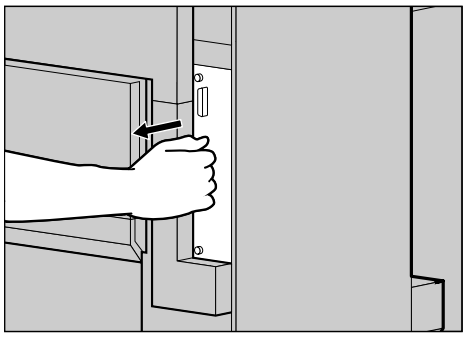

ZDJP025J

5 Put the Controller Board in a flat place.

You will install the User Account Enhance Unit in the position as shown in the illustration.

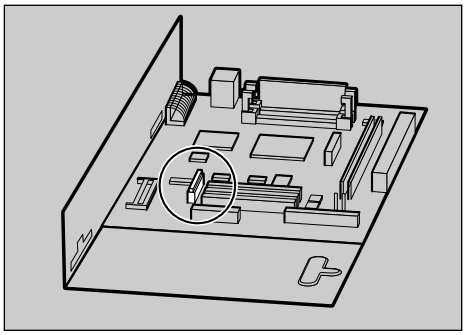

ZDJP702J

6 Install the User Account Enhance Unit to the Controller Board. If there is a screw coming out from the place of attachment, insert the screw in the hole at the tip of the User Account Enhance Unit (①) and push the unit in the direction of the arrow (②).

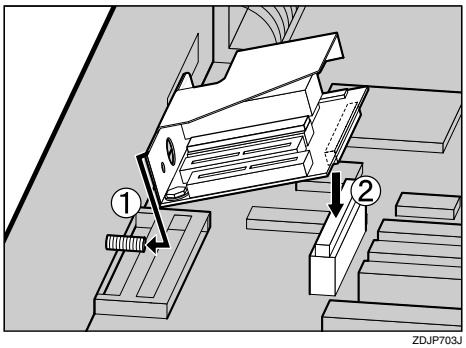

ZDJP703J

Confirm that the User Account Enhance Unit is connected firmly to the Controller Board.

7 Tighten the screw to fasten the User Account Enhance Unit using provided screwdriver.

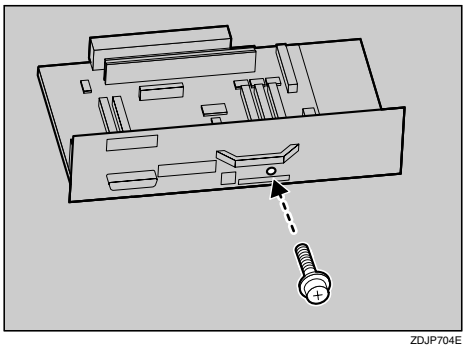

ZDJP704E

2

8 Adjust the Controller Board to the top and bottom rails, and then push in slowly until it stops.

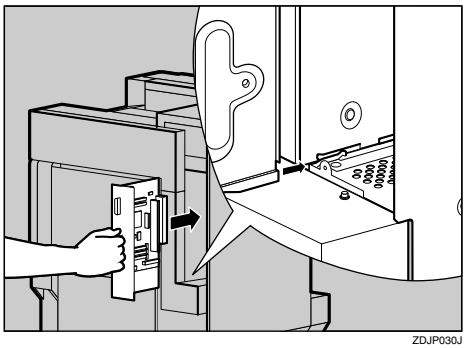

ZDJP030J

Insert the Controller Board firmly by pushing the left area as shown in the illustration.

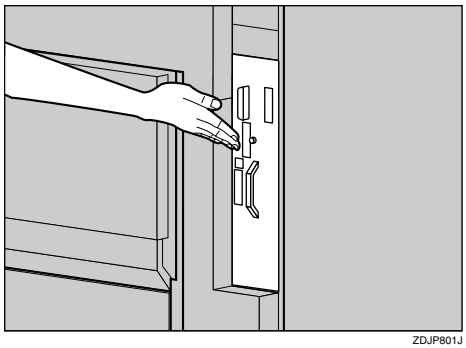

ZDJP801J

9 Tighten two screws to fasten the Controller Board back into its original position using provided screwdriver.

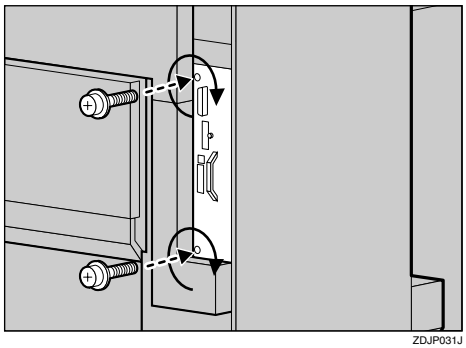

ZDJP031J

Note

- ❒ Be sure to return the provided screwdriver to its original position on the inside of the front cover.

Note

- ❒ After finishing all installation for printing, you can check whether the User Account Enhance Unit is installed properly. Print the Configuration Page from the "List/Test Print" menu. If it is installed properly, you will see "Installed" for "Accounting Module".
- ❒ If the User Account Enhance Unit is not installed properly, you will see "Not Installed". In such a case, reinstall from step **1**. If you cannot install it properly even after reinstallation, contact your sales or service representative.

Reference

See p.69 “Test Printing”.

Installing the Printer Hard Disk Type 3800C

Important

- ❒ Be sure to touch a metal object before touching the Printer Hard Disk to discharge static electricity. Even a small amount of static electricity can damage the unit.
- ❒ Do not subject the Printer Hard Disk to physical shocks.

1 Check the contents of the box.

❖ **Printer Hard Disk Type 3800C**

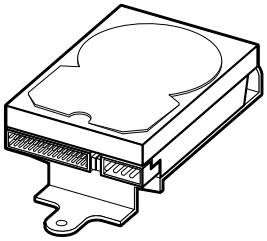

❖ **Flat Cable**

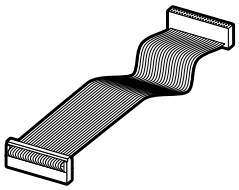

❖ **Power Cable**

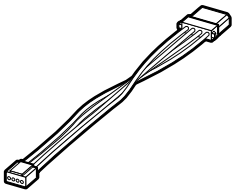

❖ **Two Screws**

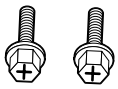

2 Turn off the power switch and unplug the power cable.

3 Remove two screws that are fastening the Controller Board on the back of the printer using provided screwdriver.

Reference

See p.22 "How to Use the Screwdriver".

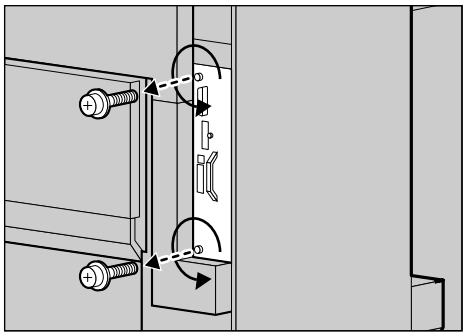

The removed screws will be used later to fasten the Controller Board.

4 Holding the handle, pull out the Controller Board slowly.

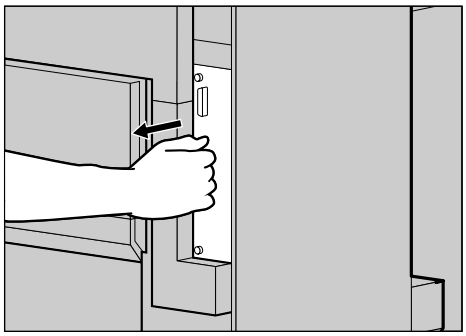

5 Put the Controller Board in a flat place.

6 **Install the Printer Hard Disk to the Controller Board.**

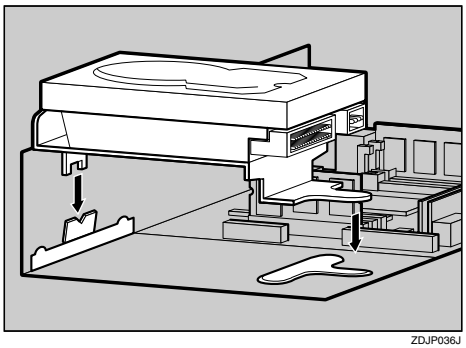

ZDJP036J

7 **Tighten two screws to fasten the Printer Hard Disk to the Controller Board using provided screwdriver.**

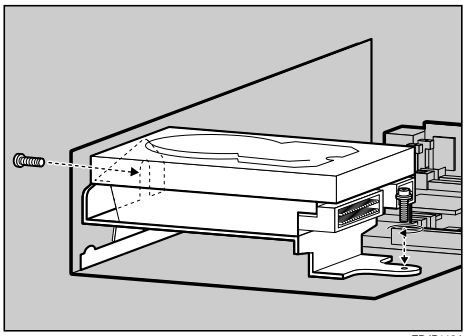

ZDJP118J

8 **Connect the power cable and flat cable to the Printer Hard Disk.**

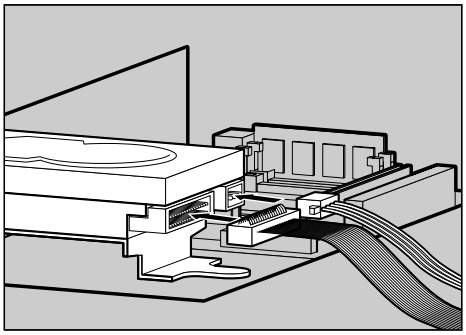

ZDJP035J

9 **Connect the flat cable to the Controller Board.**

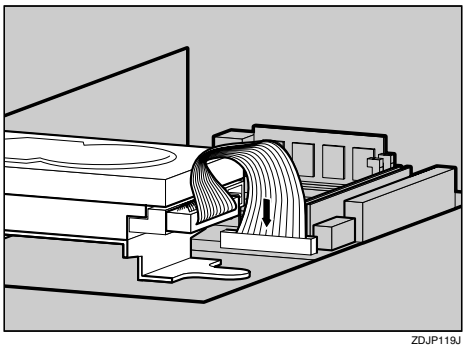

ZDJP119J

10 **Connect the power cable to the Controller Board.**

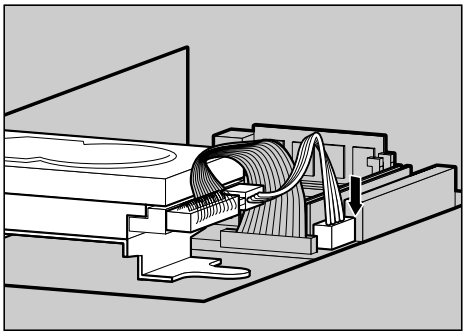

ZDJP117J

11 **Adjust the Controller Board to the top and bottom rails, and then push in slowly until it stops.**

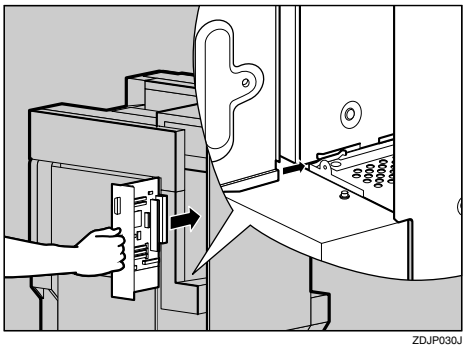

ZDJP030J

Insert the Controller Board firmly by pushing the left area as shown in the illustration.

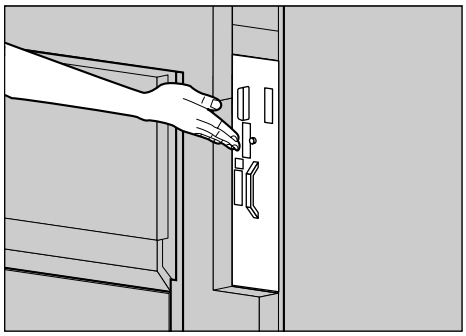

ZDJP801J

12 Tighten two screws to fasten the Controller Board back into its original position using provided screwdriver.

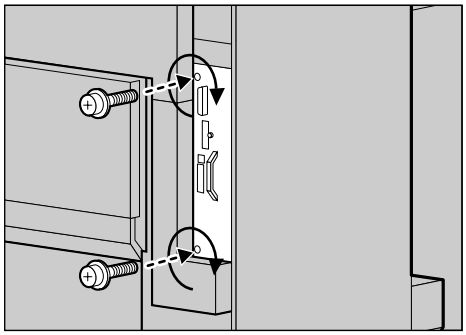

ZDJP031J

Note

❒ Be sure to return the provided screwdriver to its original position on the inside of the front cover.

Formatting the printer hard disk drive

If it becomes necessary to format the Printer Hard Disk after initial setup, execute "HDD Format" in the Maintenance menu.

Important

❒ Formatting the Printer Hard Disk will delete all data.

1 Press 【Menu】.

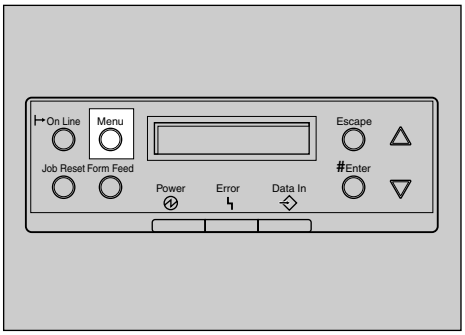

ZDJS001N

"Menu" appears on the panel display.

2 Press 【▲】 or 【▼】 to display "Maintenance", and then press 【OK】.

```
Menu:
 Maintenance
```

The menu for selecting the Maintenance item is shown.

3 Press 【▲】 or 【▼】 to display "HDD Format", and then press 【OK】.

```
Maintenance:
 HDD Format
```

A check message is shown.

Note

❒ If "HDD Format" is not displayed on the panel display, the Printer Hard Disk is not installed properly. Reinstall from step 1 ⇒ p.39. If you still cannot install it properly, contact your sales or service representative.

Important

❒ Do not turn off the power switch while formatting the Printer Hard Disk to avoid a malfunction.

4 **Press 【OK】.**

The Printer Hard Disk is formatted, and a restart message is shown.

5 **Turn off the power switch once, and then turn the power back on.**

The Printer Hard Disk format is completed, enabling its use.

Installing the Duplex Unit Type 3800C

Preparation

If you want to use the optional Paper Feed Unit at the same time, install the optional Paper Feed Unit first, and then install the Duplex Unit.

⚠ ***CAUTION:***

- *The inside of the machine becomes very hot. Do not touch the parts with a label indicating a "hot surface". Touching a "hot surface" could result in a burn.*

⚠ ***CAUTION:***

- *Do not let go of the Duplex Reversal Unit until it is fastened in place. It could drop and cause an injury.*

Installing the Duplex Reversal Unit Stand

1 **Check the contents of the box.**

❖ **Stand**

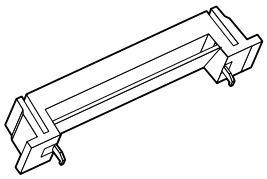

❖ **Paper Guide**

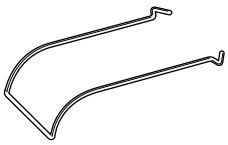

❖ **One Short Screw, Four Long Screws**

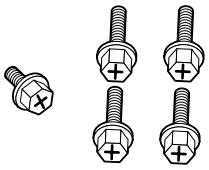

❖ **Duplex Reversal Unit**

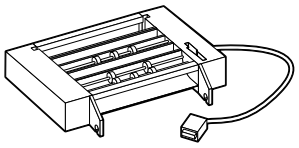

❖ **Duplex Feed Unit**

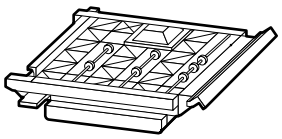

2 Remove the adhesive tape and packing materials.

Important

- ❒ Do not remove the adhesive tape which hold the auxiliary bar at this point. Remove it in step 3 on p.45 "Installing the Duplex Reversal Unit"
- ❒ Do not remove the adhesive tape which hold the cable of the Duplex Reversal Unit at this point. Remove it in step 7 on p.45 "Installing the Duplex Reversal Unit"

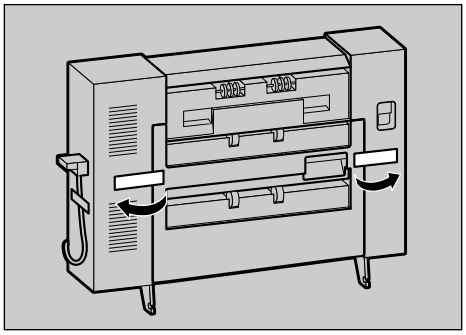

ZDJP711J

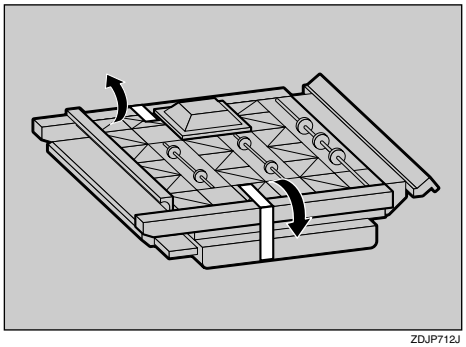

ZDJP712J

3 Turn off the power switch and unplug the power cable from the wall outlet.

4 Lift the External Tray in the direction of the arrow (①) and remove (②).

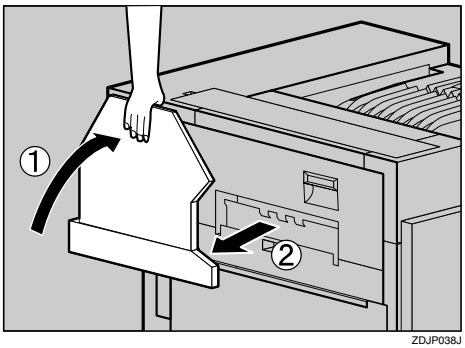

ZDJP038J

5 Remove the two small covers on the upper left cover of the printer.

❶ Open the upper left cover.

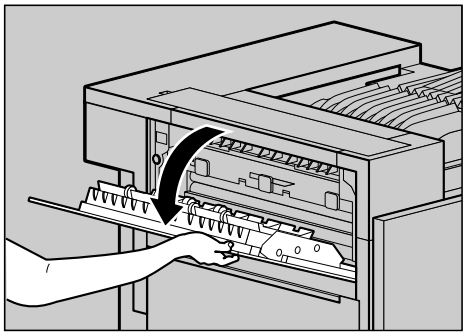

ZDJP039J

❷ Pinch the two small covers and pull in the direction of the arrow to remove them.

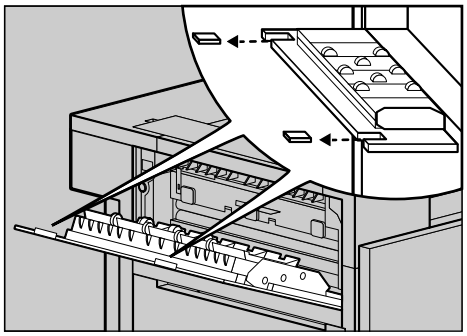

ZDJP040J

❸ Close the upper left cover.

Note

- ❒ You will not use the removed two covers.

2

6 **Remove the protective cover on the left side of the printer. Hold the protective cover by both sides, and while pushing the left side of the cover (①), open it in the direction of the arrow (②), and then remove (③).**

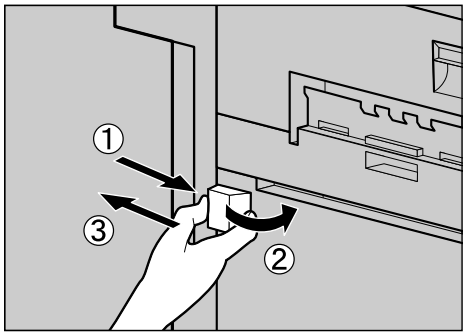

ZDJP041J

Note

❒ You will not use the removed protective cover.

7 **Attach the paper guide to the stand. Hold the paper guide so that its right side bends down as shown in the illustration, and while holding it lightly (①), insert it into the holes of the stand (②).**

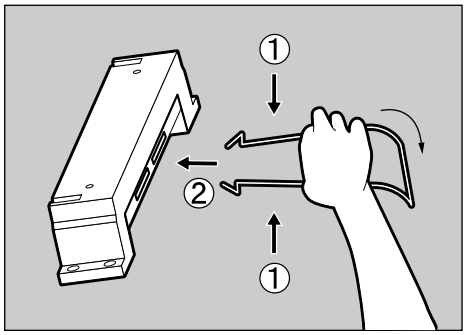

ZDJP042J

8 **Insert the claws of the stand into the holes on the left side of the printer (①), and push down (②).**

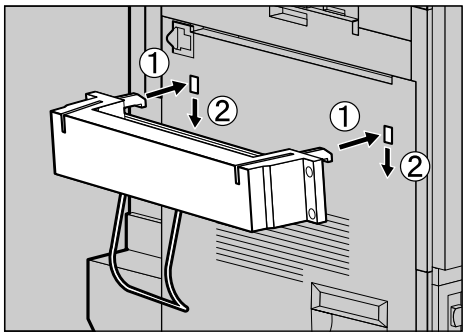

ZDJP043J

9 **Tighten four long screws to fasten the Duplex Reversal Unit Stand using provided screwdriver. Fasten in the order of ①⇒②⇒③⇒④ as shown in the illustration.**

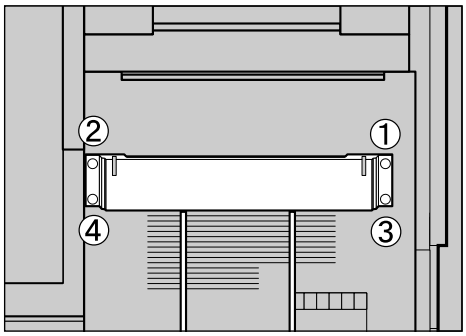

ZDJP044J

Reference

See p.22 "How to Use the Screwdriver".

This completes the installation of the stand. Next, install the Duplex Reversal Unit.

Installing the Duplex Reversal Unit

1 Holding the Duplex Reversal Unit in a level position with both hands, insert the hooks into the groove of the stand. At this point, adjust the tip of the hooks to the line on the stand (①) and insert slowly (②). Do not let go of the Duplex Reversal Unit even after insertion.

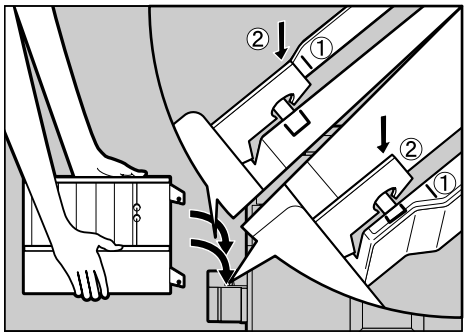

ZDJP045J

The hooks of the Duplex Reversal Unit grasp the bar inside the groove of the stand.

2 Supporting the Duplex Reversal Unit, remove the stopper of the mounting bracket on the printer.

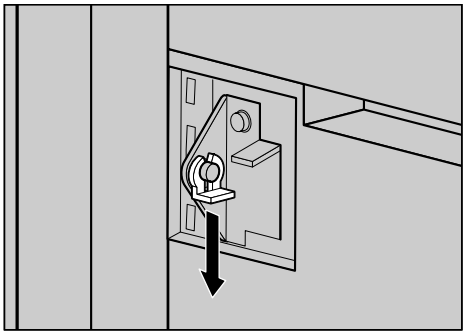

ZDJP046J

This stopper will be used in a later step 5, so be careful not to lose it.

3 Supporting the Duplex Reversal Unit, remove the adhesive tape and hold the auxiliary bar in front of the hook on the left side, and then stand it up.

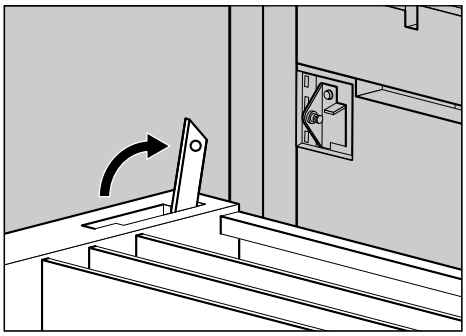

ZDJP047J

4 Hook the hole of the auxiliary bar on the mounting bracket of the printer.

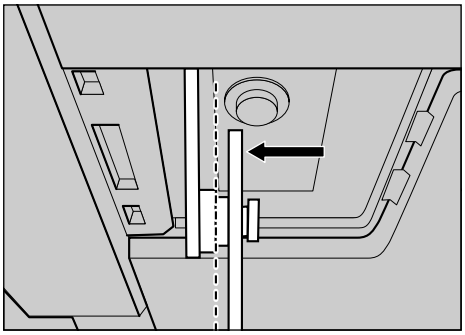

ZDJP048J

In step 5, move the auxiliary bar to the position shown with a perforated line in the illustration.

5 Hang the auxiliary bar on the deep left end as shown in the illustration, and then install the stopper that was removed in step 2.

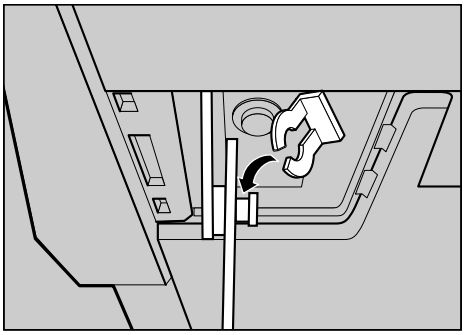

ZDJP049J

Make sure the auxiliary bar and stopper are installed in the positions shown in the illustration.

6 Raise the Duplex Reversal Unit slowly, and then adhere it to the printer.

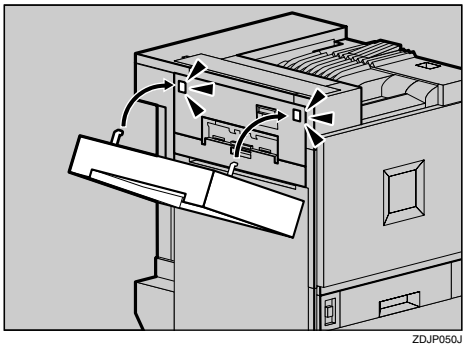

ZDJP050J

7 Remove the adhesive tape which hold the cable, and then connect the cable of the Duplex Reversal Unit to the upper connector on the back of the printer.

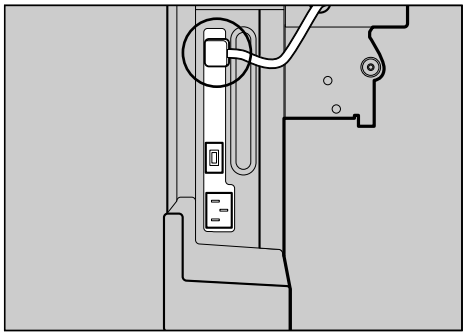

ZDJP051J

This completes the installation of the Duplex Reversal Unit. Install the Duplex Feed Unit after installing the External Tray.

8 Install the External Tray.

❶ Stand the External Tray and insert it from the left side with both hands.

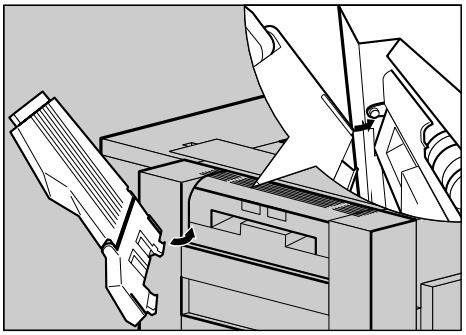

ZDJP052J

❷ **Pushing the right edge of the External Tray lightly with your finger (①), insert it (②).**

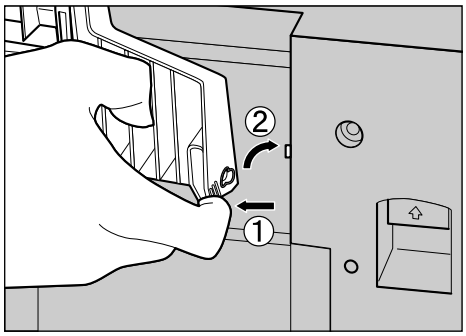

ZDJP053J

❸ **Lower the External Tray toward you.**

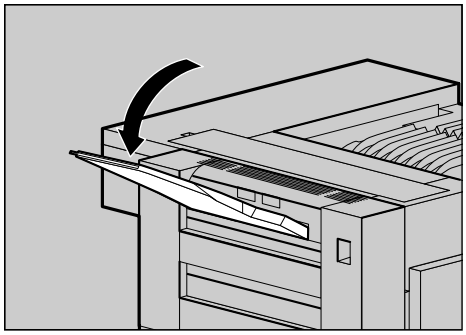

ZDJP054J

Installing the Duplex Feed Unit

1 **Open the front cover slowly by pulling the two points on the left and right.**

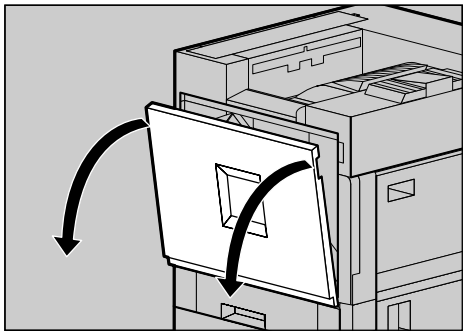

ZDJH007J

2 **Holding the Duplex Feed Unit with both hands, place it on the vertical rail and insert slowly until it stops.**

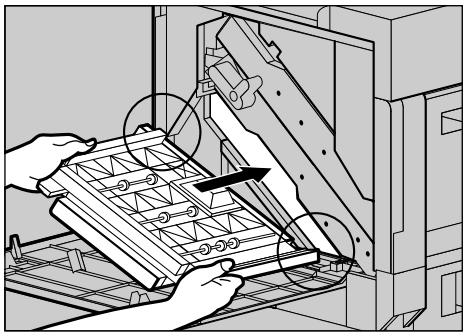

ZDJP056J

The vertical rail is in the position as shown in the illustration.

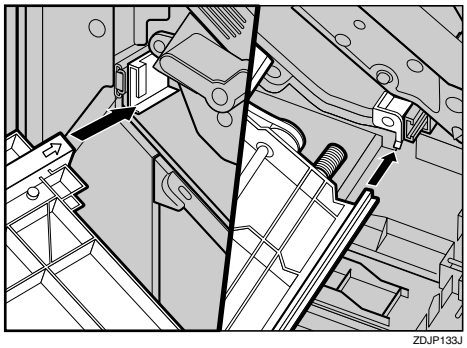

ZDJP133J

3 **Fasten the Duplex Feed Unit with one short screw using provided screwdriver.**

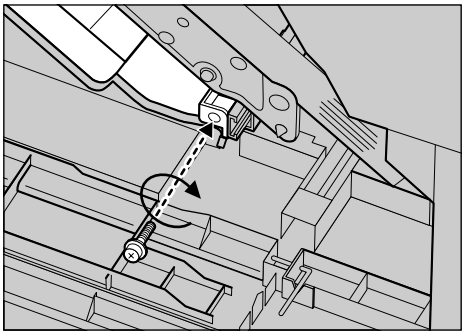

ZDJP057J

Note

❒ Be sure to return the provided screwdriver to its original position on the inside of the front cover.

This completes the installation of the Duplex Feed Unit.

2

4 Close the front cover slowly by pressing the two points on the left and right.

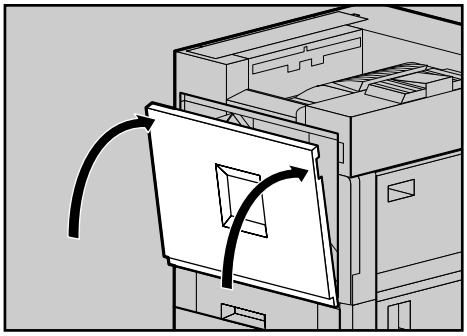

ZDJH041J

Note

❒ After finishing all installation for printing, you can check whether the Duplex Unit is installed properly. Print the Configuration Page from the "List/Test Print" menu. If it is installed properly, you will see "Duplex Unit" under the "Options" list.

❒ If the Duplex Unit is not installed properly, reinstall from step 1 ⇒ p.42. If you cannot install it properly even after reinstallation, contact your sales or service representative.

Reference

See p.69 “Test Printing”.

5 Check for spare parts. You will not use these spare parts.

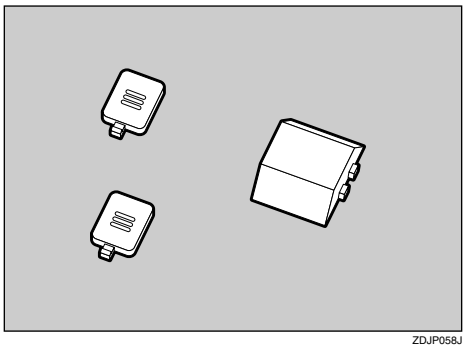

ZDJP058J

Installing the SR770 (2 Tray Finisher)

Preparation

Install the optional Paper Feed Unit and optional Memory Unit or optional Printer Hard Disk first, and then install the 2 Tray Finisher.

If you want to use the optional Memory Unit, 1394 Interface Unit, User Account Enhance Unit and Printer Hard Disk at the same time, install these options first, and then install the 2 Tray Finisher.

CAUTION:

- *When moving the 2 Tray Finisher, hold the center of both sides, and lift slowly. Lifting it carelessly or dropping it may cause an injury.*

Note

❒ The 2 Tray Finisher weighs approximately 53 kg (116.9 lbs).

Important

❒ You cannot install the 2 Tray Finisher unless both the Paper Feed Unit and Duplex Unit options are installed.

- ❒ The 2 Tray Finisher requires the optional Printer Hard Disk or optional Memory Unit at least 128 MB.
- ❒ You cannot install the 4-bin Mailbox and 2 Tray Finisher at the same time.

1 Turn off the power switch and unplug the power cable.

2 Remove the adhesive tape and packing materials.

Important

- ❒ Do not remove the adhesive tape which hold the cable at this point. Remove it in step 18.

❖ Front and Side

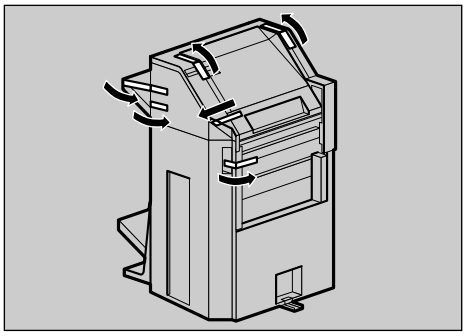

ZDJP059J

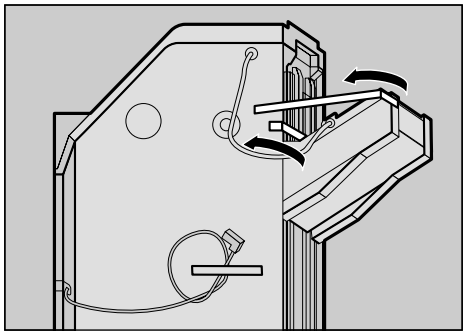

ZDJP062J

❖ Back

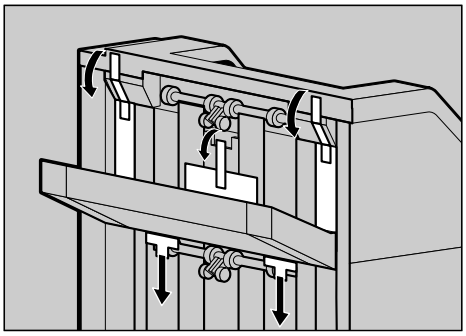

ZDJP950J

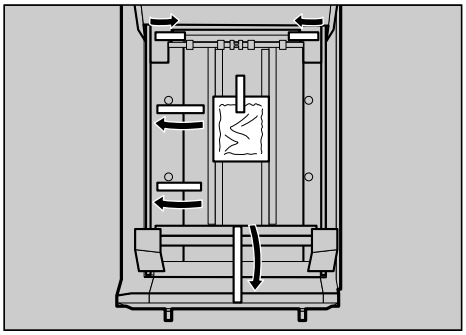

ZDJP060J

❖ Interior

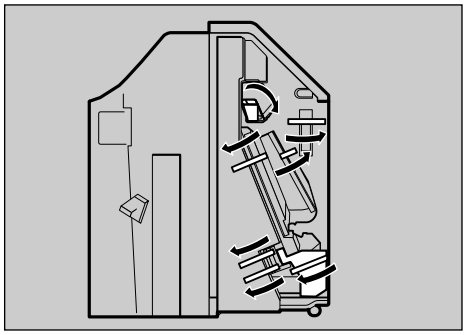

ZDJP061J

3 Check the contents of the box.

❖ **Two short screws, six long screws**

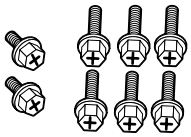

❖ **Connecting Bracket**

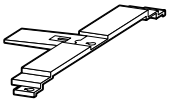

❖ **Mounting Bracket**

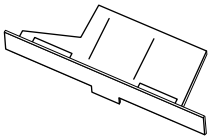

❖ **Rail**

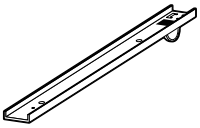

❖ **Two 2 Tray Finisher Trays**

4 Stand the External Tray of the printer.

❶ Stand it vertically.

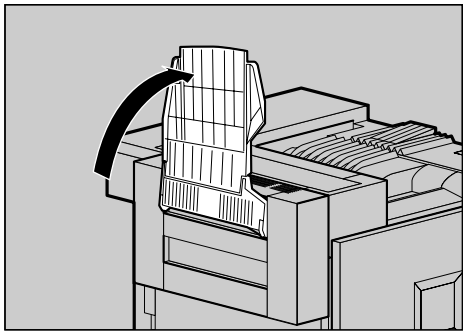

ZDJP064J

❷ Fold it into printer.

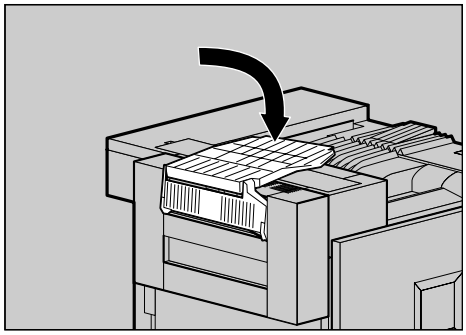

ZDJP065J

5 Insert the rail with a wheel in the mounting bracket.

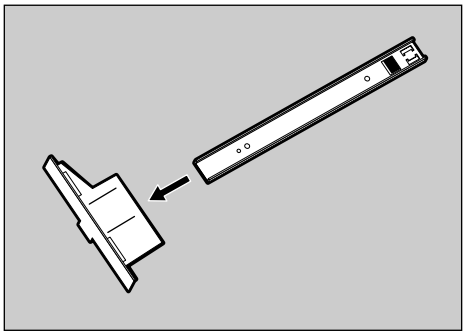

ZDJP066J

6 **Temporarily fasten one long screw in the position shown in the illustration. Turn the screw three to four times using your hand.**

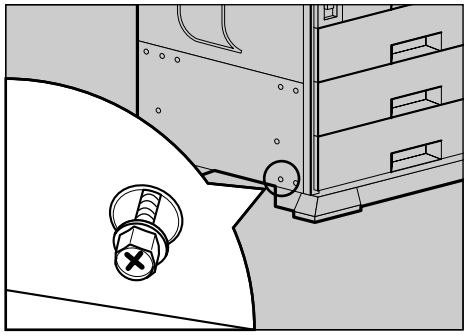

ZDJP067J

7 **Insert the rail, assembled in step 5, into the bottom area of the printer.**

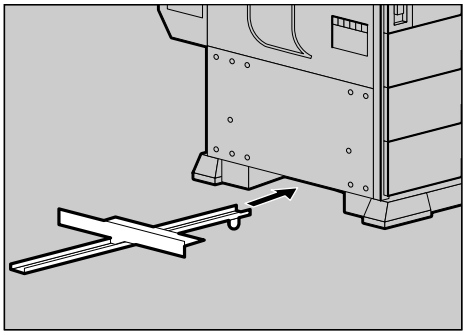

ZDJP068J

8 **Hook the hole of the mounting bracket on the screw that was temporarily fastened in step 6.**

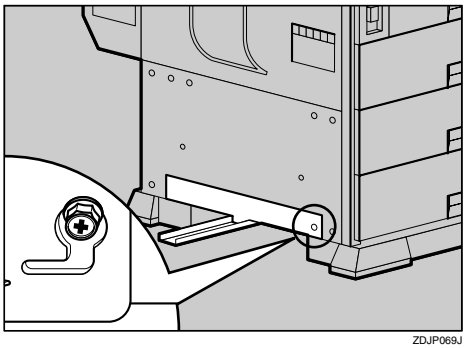

ZDJP069J

9 **Holding the mounting bracket with both hands, move it in the direction of up (①) ⇒ right (②).**

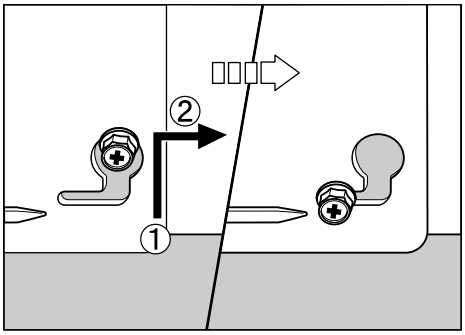

ZDJP070J

10 **With the left corner of the mounting bracket adjusted to the position shown by the arrow in the illustration, fasten the left side of the mounting bracket with a long screw using provided screwdriver. Also tighten the screw on the right side that was temporarily fastened in step 6.**

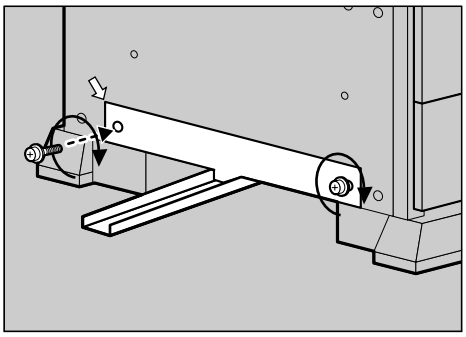

ZDJP071J

Reference

See p.22 "How to Use the Screwdriver".

11 Temporarily fasten the two long screws in the positions shown in the illustration of the Duplex Reversal Unit. Turn the screws three to four times with your hand.

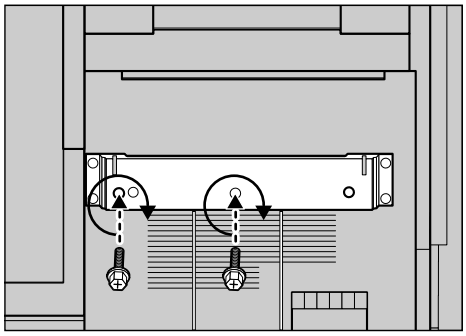

ZDJP072J

12 Hook the connecting bracket on the screws that were temporarily tightened in step 11.

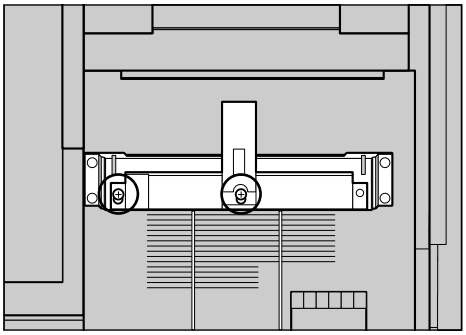

ZDJP073J

13 Fasten the right side of the connecting bracket with a long screw using provided screwdriver. Also tighten two screws that were temporarily tightened in step 11.

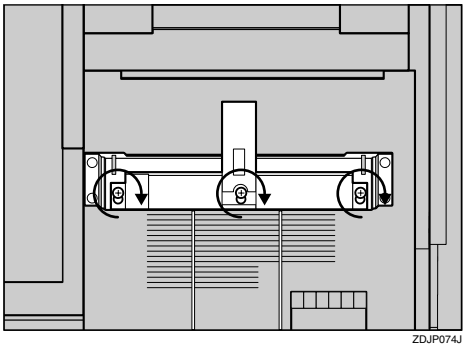

ZDJP074J

Note

❒ If you have the 1000-sheet Paper Feed Unit or 2000-sheet Large Capacity Tray installed, proceed to step 11.

14 If you have the 500-sheet Paper Feed Unit installed, change the position of the connecting bracket on the side of the 2 Tray Finisher to the lower level. Remove two screws using provided screwdriver, move the connecting bracket down, and then refasten the screws.

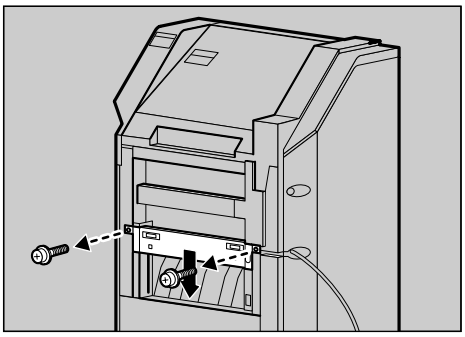

ZDJP075J

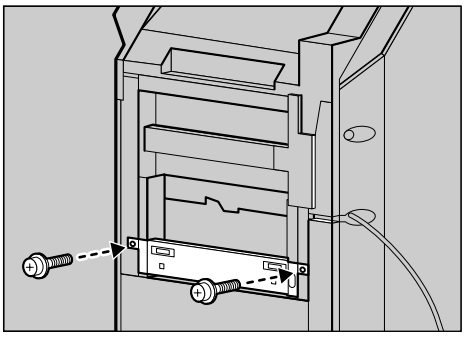

ZDJP076J

15 **Place the rail of the printer on the rail of the 2 Tray Finisher, and then slide until it stops.**

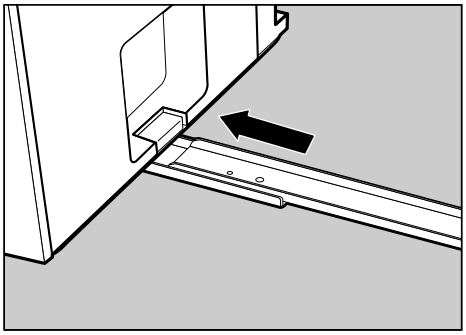

ZDJP077J

16 **Fasten the rails with a long screw using provided screwdriver.**

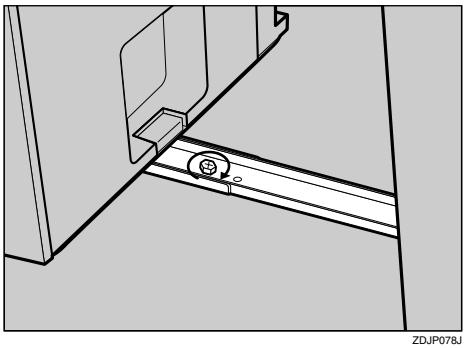

ZDJP078J

17 **Push the 2 Tray Finisher slowly toward the printer until it stops.**

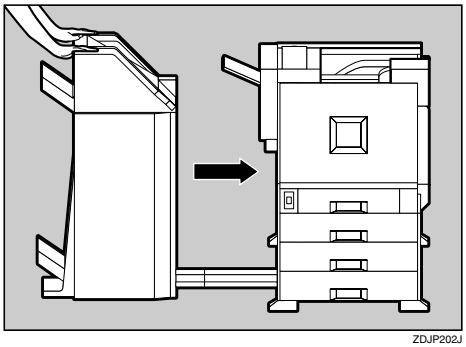

ZDJP202J

18 **Remove the tape that is fastening the cable to the 2 Tray Finisher.**

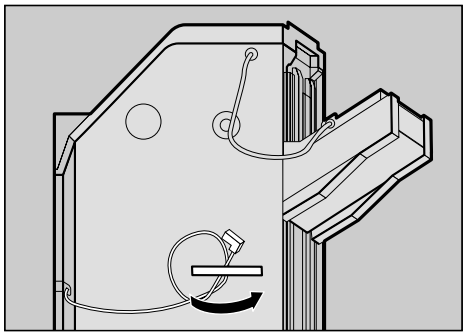

ZDJP080J

19 **Connect the cable of the 2 Tray Finisher to the lower connector on the back of the printer.**

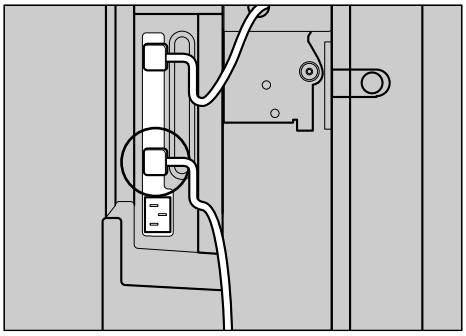

20 **Install the two 2 Tray Finisher Trays to the 2 Tray Finisher.**

Note

❒ The two Fnisher Trays are identical.

❶ **Adjust the notch on the left side of the 2 Tray Fnisher Tray to the cable coming out from the 2 Tray Finisher.**

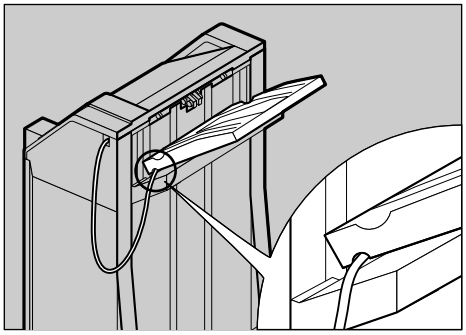

ZDJP082J

2

❷ **With the 2 Tray Fnisher Tray laid horizontally, slide it in at a slant until it stops.**

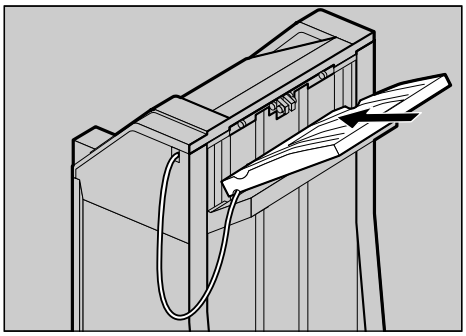

ZDJP083J

❸ **Fasten the Fnisher Tray with a short screw using provided screwdriver.**

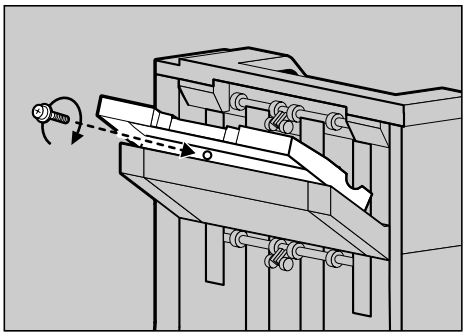

ZDJP084J

❹ **Use the same steps (steps ❷ and ❸) to install the other 2 Tray Fnisher Trays.**

Note

❒ Be sure to return the provided screwdriver to its original position on the inside of the front cover.

21 Return the Fnisher Tray that is installed on the Duplex Unit back into place.

❶ **Lift the top.**

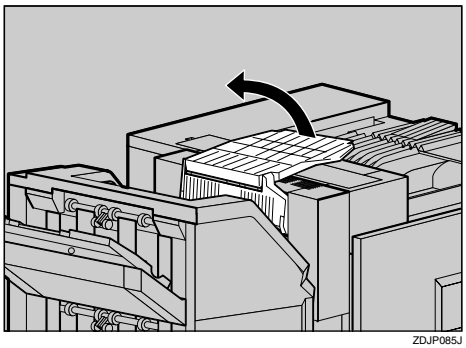

ZDJP085J

❷ **Lower slowly.**

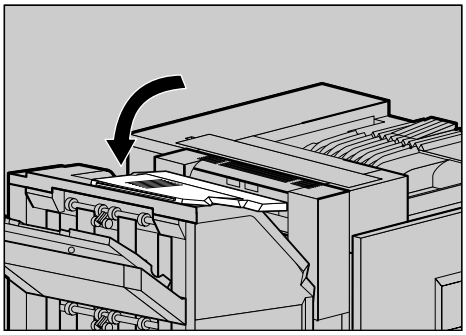

ZDJP086J

Note

❒ After finishing all installation for printing, you can check whether the Finisher is installed properly. Print the Configuration Page from the "List/Test Print" menu. If it is installed properly, you will see "2 Tray Finisher" under the "Options" list.

❒ If the Finisher is not installed properly, reinstall from step 1. If you cannot install it properly even after reinstallation, contact your sales or service representative.

Reference

See p.69 “Test Printing”.

Installing the Mail Bin Type 3800C (4-bin Mailbox)

Preparation

If you want to use the optional Paper Feed Unit at the same time, install the optional Paper Feed Unit first, and then install the 4-bin Mailbox.

⚠ CAUTION:

- *When moving the 4-bin Mailbox, hold the center of both sides, and lift slowly. Lifting it carelessly or dropping it may cause an injury.*

Note

❒ The 4-bin Mailbox weighs approximately 7 kg (15.5 lbs).

⚠ CAUTION:

- *When installing the 4-bin Mailbox, be sure to hold both sides. If you hold it by the bottom, you might get your hand caught and injured.*

Important

❒ You cannot install the 4-bin Mailbox and 2 Tray Finisher at the same time.

1 Turn off the power switch and unplug the power cable.

2 Remove the attached package.

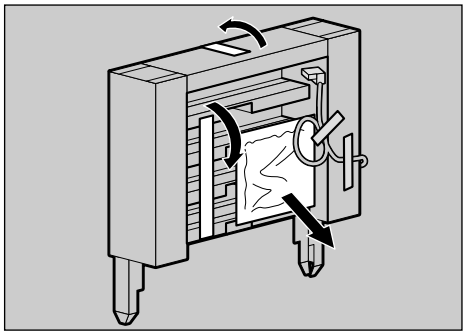

ZDJP087J

Important

❒ Do not remove the adhesive tape that is fastening the cable at this point. Remove it in step 13.

3 Check the contents of the box.

❖ **Two Screws**

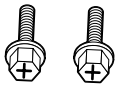

❖ **Four Output Bins**

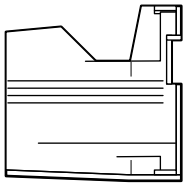

❖ **Labels**

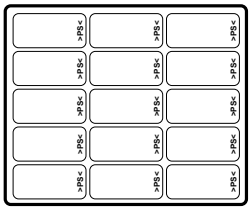

4 Remove the top cover. Draw the lever (①) and lift (②) to remove.

There is an opening for installing the 4-bin Mailbox.

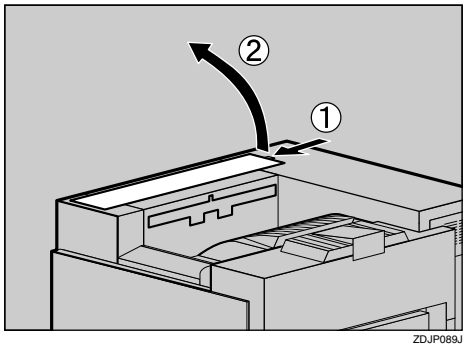

ZDJP089J

Note

❒ You will not use the removed cover.

5 Holding both sides of the 4-bin Mailbox with both hands, stand on the left side of the printer. Lower it slowly to fit into the openings, and then insert until you hear a click.

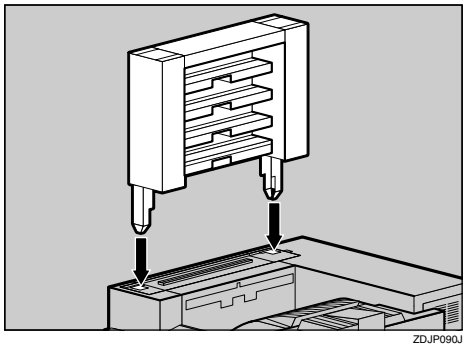

ZDJP090J

If the Duplex Unit is installed, proceed to step **7**.

6 Pull up the External Tray in the direction of the arrow (①), and then remove (②).

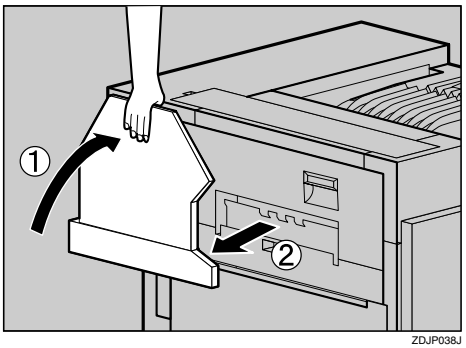

ZDJP038J

7 If the Duplex Unit is installed, open the Duplex Reversal Unit.

❶ Push up the lock release button, and keep in that position.

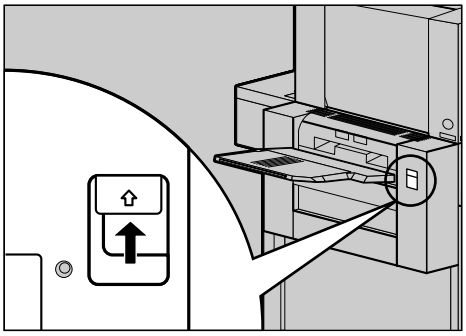

ZDJP092J

❷ Lower the Duplex Reversal Unit slowly until it stops.

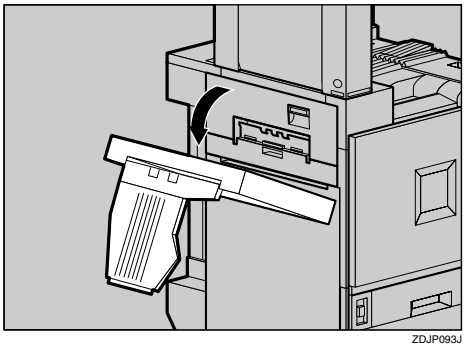

ZDJP093J

8 **Open the upper left cover.**

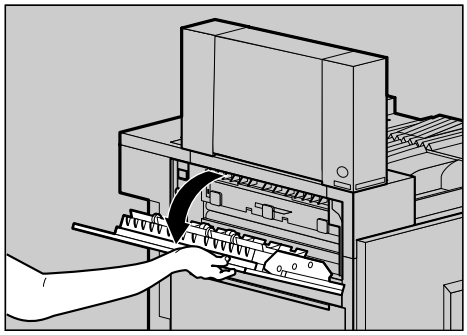

ZDJP094J

9 **Fasten the 4-bin Mailbox with two screws using provided screwdriver.**

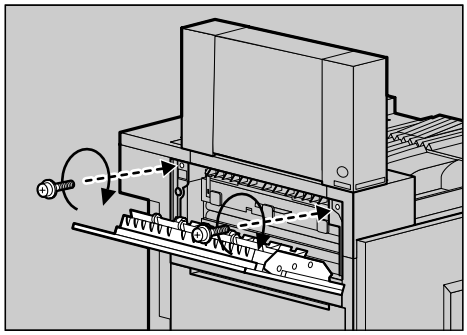

ZDJP095J

Reference

See p.22 "How to Use the Screwdriver".

Note

❒ Be sure to return the provided screwdriver to its original position on the inside of the front cover.

10 **Close the upper left cover.**

If the Duplex Unit is installed, proceed to step 12.

11 **Install the External Tray to the printer. Hook the External Tray to the slits of the printer, and then lower the tray toward you.**

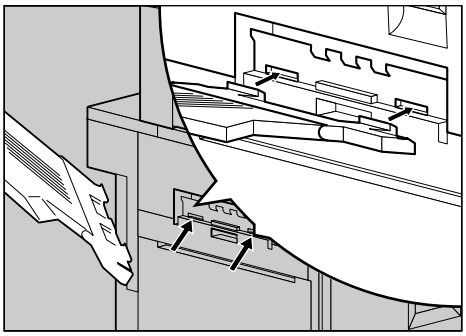

ZDJP096J

12 **If the Duplex Unit is installed, return the Duplex Reversal Unit to its original position. Lift it slowly until you hear a click.**

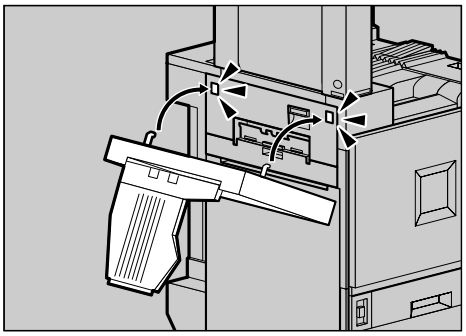

ZDJP098J

13 **Remove the adhesive tape of the cable of the 4-bin Mailbox.**

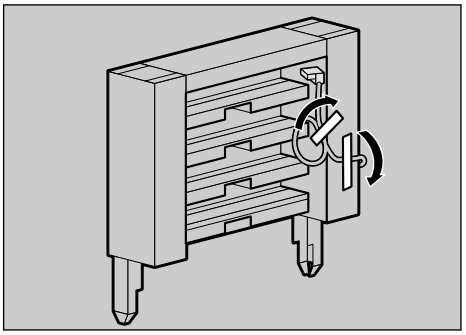

ZDJP994J

14 Check that the cable of the 4-bin Mailbox is in the position as shown in the illustration.

If it is not, change its position in the direction of (①) ⇒ (②).

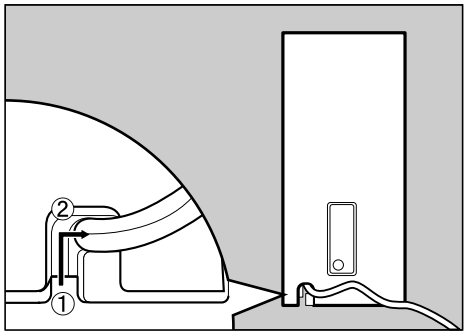

ZDJP091J

15 Connect the cable of the 4-bin Mailbox to the lower connector on the back of the printer.

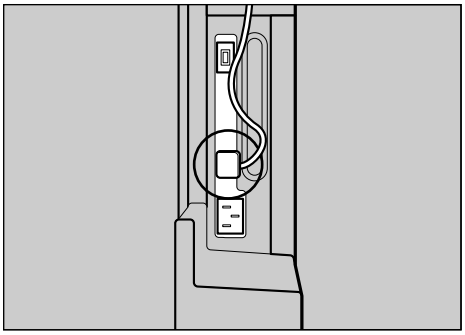

ZDJP100J

16 Insert four output bins in order, starting from the bottom.

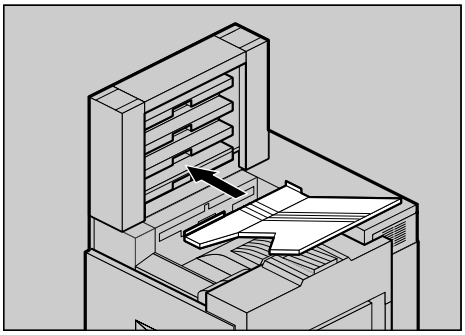

ZDJP099J

Note

- ❒ If you have decided to assign Mail Box Bins to individuals and departments decided, write their names on the labels provided and stick them to the sides of the 4-bin Mailbox.

Note

- ❒ After finishing all installation for printing, you can check whether the 4-bin Mailbox is installed properly. Print the Configuration Page from the "List/Test Print" menu. If it is installed properly, you will see "4-bin Mailbox" under the "Options" list.
- ❒ If the 4-bin Mailbox is not installed properly, reinstall from step **1**. If you cannot install it properly even after reinstallation, contact your sales or service representative.

Reference

See p.69 “Test Printing”.

17 Check for spare part. You will not use this spare part.

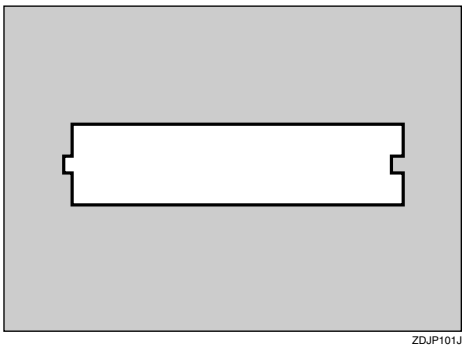

ZDJP101J

Installing the Toner Cartridge

⚠ ***WARNING:***

- ***Do not incinerate spilled toner or used toner. Toner dust is flammable and might ignite when exposed to an open flame.***
- ***Disposal should take place at an authorized dealer or an appropriate collection site. If you dispose of the used toner cartridges yourself, dispose of them according to local regulations.***

⚠ ***CAUTION:***

- *The inside of the machine becomes very hot. Do not touch the parts with a label indicating a "hot surface". Touching a "hot surface" could result in a burn.*
- *Keep toner (used or unused) and the toner cartridge out of reach of children.*
- *Our products are engineered to meet the highest standards of quality and functionality. When purchasing expendable supplies, we recommend using only those provided by an authorized dealer.*

Note

❒ The toner cartridge allows you to print up to about 20,000 pages in black, and about 10,000 pages in color. These numbers were obtained from printing A4▯ 5% charts, and the actual number of pages will differ depending on the paper type, size, contents and settings.

1 **Open the upper right cover.**

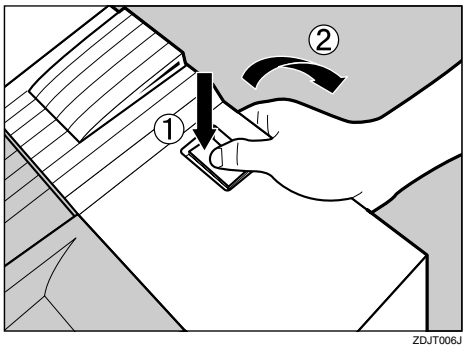

ZDJT006J

2 **Take out the toner cartridges from the box.**

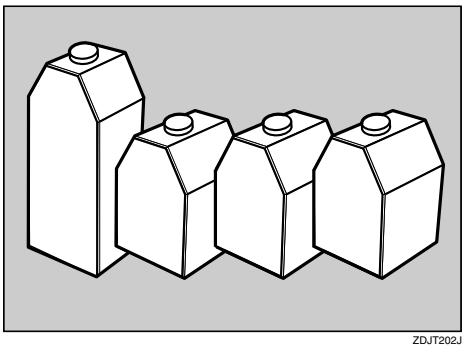

ZDJT202J

Note

❒ The black (K) toner cartridge contains more than the other toner cartridges.

3 **Shake the toner cartridge back and forth about 5 - 6 times.**

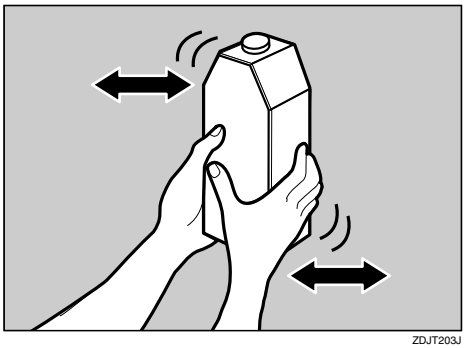

ZDJT203J

4 Holding the toner cartridge with the metal contact area in front, attach in the direction of the arrow.

Insert each toner cartridge to the same color slot.

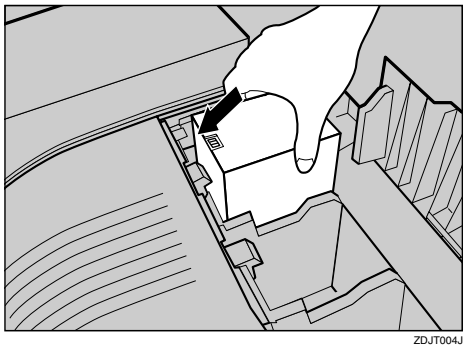

ZDJT004J

Important

❒ Be careful not to touch the metal contact point with your fingers.

5 Insert the toner cartridge slowly until the green hook snaps on the metal contact area.

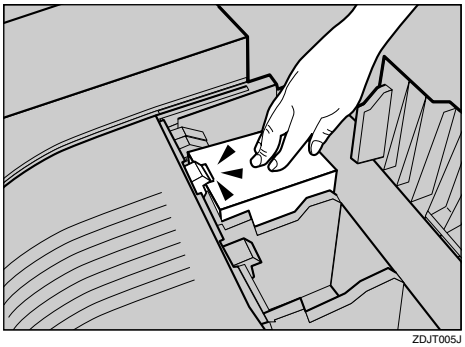

ZDJT005J

Important

❒ Do not insert and remove the toner cartridges over and over. This could result in a toner leak.

6 Use the same steps to attach the remaining three toner cartridges.

7 Close the upper right cover.

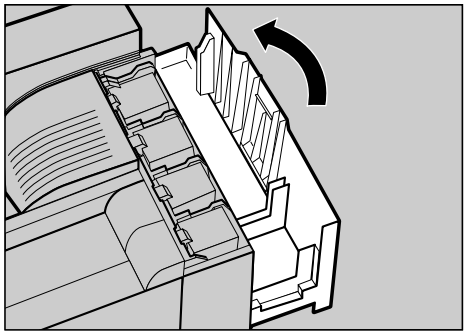

ZDJH042J

Important

❒ Do not turn off the power switch during "Loading Toner..." appears on the panel display to avoid a printer malfunction.

Loading Paper

This section shows how to load paper in the paper tray. If you do not load paper, the setup procedure will not complete properly.

The side guide and end guide of each paper tray is set to the following values at factory default. The loading procedure is different if you choose to load paper that is a different size from that of factory default.

⇒ p.61 “Loading Paper in Tray 1”

⇒ p.63 “Changing the settings”

❖ Settings of the Paper Trays at Factory Default

- Tray 1 (Standard): 11" × $8^1/_2$" ▯ exclusive
- 2000-sheet Large Capacity Tray (Optional): 11" × $8^1/_2$" ▯ exclusive

Reference

For more information on the size and feed direction of paper that can be loaded in the tray, see "*Paper Types and Sizes*" in Maintenance Guide 2.

For more information on loading paper in the Bypass Tray, see "*Load Paper in the Bypass Tray*" in Maintenance Guide 2.

Loading Paper in Tray 1

Important

❒ Tray 1 is 11" × $8^1/_2$" ▯ paper exclusive. Load only the 11" × $8^1/_2$" size paper.

1 Slide the paper tray out slowly until it stops.

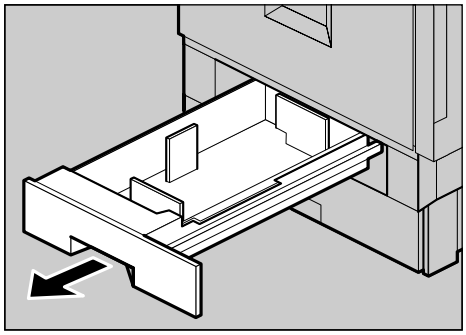

ZDJH003J

2 **Align all four sides of the paper stack, and then load it in the tray.**

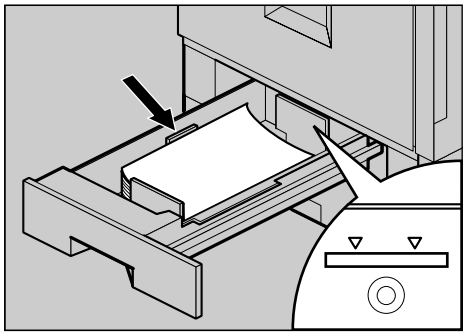

ZDJY001J

Important

- ❒ Confirm that the top of the stack is not higher than the Limit mark inside the tray.
- ❒ Be sure to adjust the side guides to the paper size, or paper misfeeds might occur.

3 **Slide the paper tray back slowly until it stops.**

Tray 2 (Standard), 500-sheet Paper Feed Unit, 1000-sheet Paper Feed Unit

1 **Slide the paper tray out slowly until it stops.**

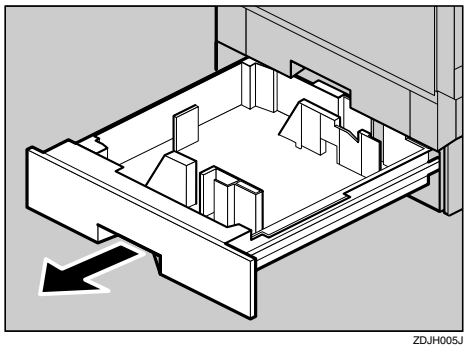

ZDJH005J

2 Align all four sides of the paper stack, and then load it in the tray.

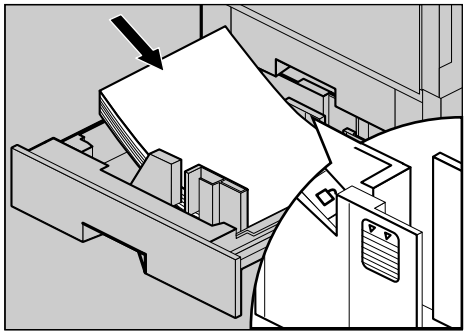

ZDJY002J

Important

- ❒ Confirm that the top of the stack is not higher than the Limit mark inside the tray.

3 Slide the paper tray back slowly until it stops.

Important

- ❒ Do not slide the paper tray in with force. If you do, the front and side guide might move.
- ❒ Be sure to adjust the side guides to the paper size, or paper misfeeds might occur.

Changing the settings

Important

- ❒ Tray 1 is 11" × 8$^1/_2$" ▯ paper exclusive. Load only the 11" × 8$^1/_2$" size paper.
- ❒ If you want to load the A4 paper in 2000-sheet Large Capacity Tray (optional), contact your sales or service representative.

The following example describes changing the settings for Tray 2.

1 Slide the paper tray out slowly until it stops.

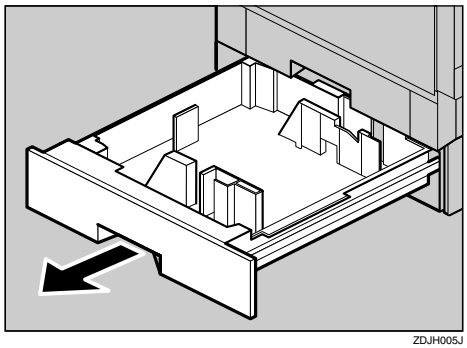

ZDJH005J

2 Release the lock of the side guide.

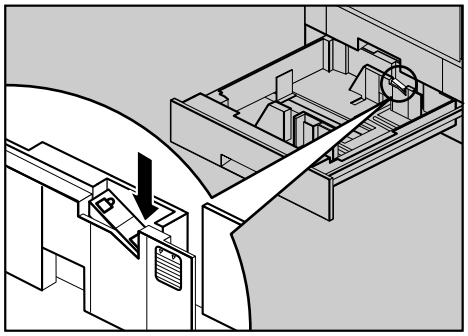

ZDJY003J

3 Align all four sides of the paper stack, and then load it in the tray.

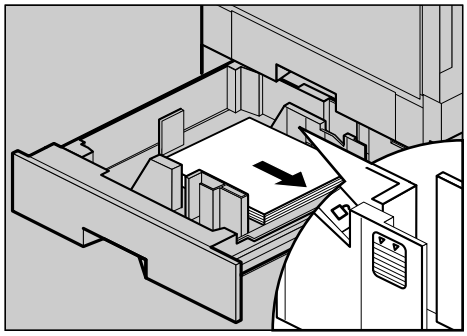

ZDJY901J

Important

- ❒ Confirm that the top of the stack is not higher than the Limit mark inside the tray.

4 Pressing the green lever of the side guide (①), adjust it to the loaded paper size (②).

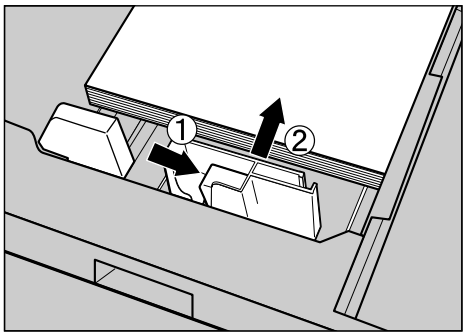

ZDJY006J

Note

- ❒ To avid paper skew, confirm that there is no space between the side guides and the paper.

5 **After checking that the paper is fixed in place, lock the side guide.**

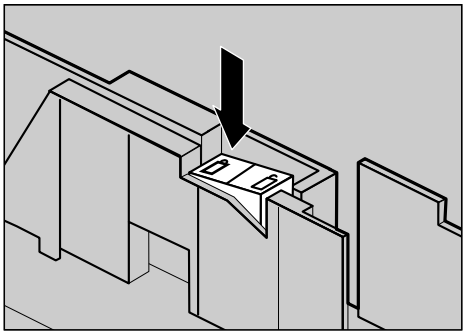

ZDJY007J

6 **Gripping both edges of the end guide (①), move it to the position of the loaded paper (②).**

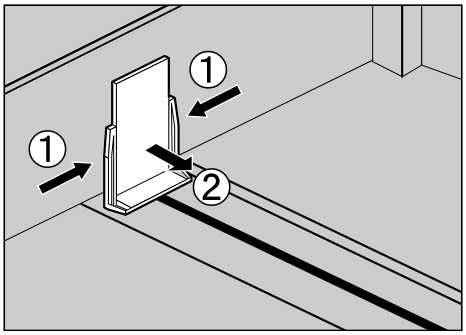

ZDJY005J

7 **Slide the paper tray back slowly until it stops.**

Important

- ❒ Do not slide the paper tray in with force. If you do, the front and side guides might move.
- ❒ Be sure to adjust the side guides to the paper size, or paper misfeed might occur.

2000-sheet Large Capacity Tray

Important

- ❒ The 2000-sheet Large Capacity Tray is set to 11" × 8$^1/_2$" ▯ at factory default.
- ❒ If you want to load the A4 paper in the 2000-sheet Large Capacity Tray (optional), contact your sales or service representative.

1 Slide the paper tray out slowly until it stops.

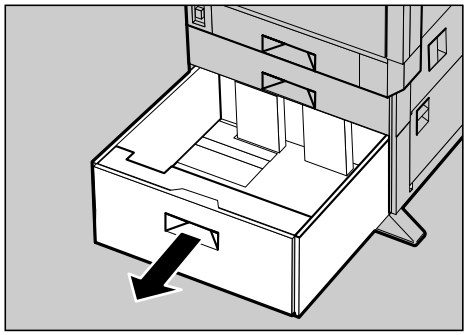

ZDJY008J

2 Align all four sides of the paper stack, and then load two stacks next to each other.

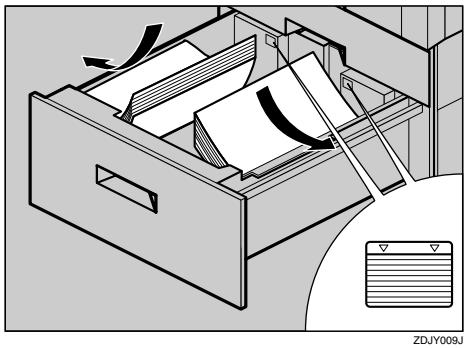

ZDJY009J

Important

- ❒ Be sure to align the paper and load them against the left and right walls, or it could result in a paper misfeed.
- ❒ Confirm that the top of the stack is not higher than the Limit mark inside the tray.

3 Slide the paper tray back slowly until it stops.

Important

- ❒ Do not forcefully slide in the paper tray. This may skew the paper stack and cause misfeeds.

Turning the Power On

⚠ ***WARNING:***

- ***Plug and unplug the power cable with dry hands, or it could result in an electric shock.***

1 **Confirm that the power switch is set to "⏻ Stand by".**

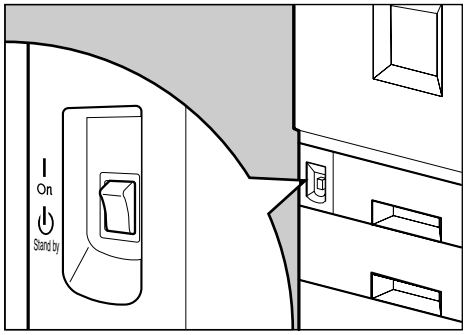

ZDJH029N

2 **Connect the power cable to the connector on the back of the printer.**

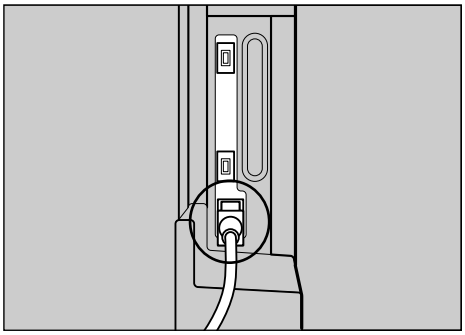

ZDJH030J

3 **Plug in the power cable.**

Important

- ❒ Make sure the power cable is plugged securely into the wall outlet.
- ❒ Turn the power switch off when plugging and unplugging the power plug.

4 **Turn the power switch to " ❙ " On.**

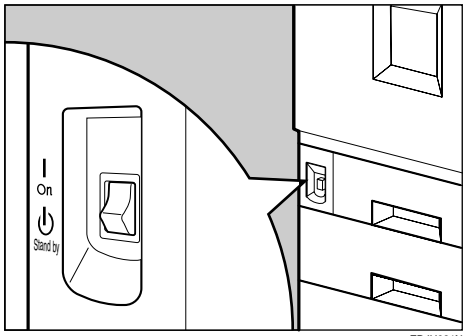

ZDJH031N

2

Selecting the Panel Display Language

Select a language following the procedures described.

The message for the selected language will appear on the panel display.

2

Note

- ❒ The default setting is English.
- ❒ If you want to use the English panel display, the following procedures are unnecessary.

1 Press [Menu].

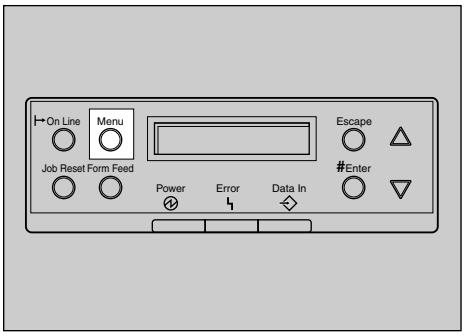

ZDJS001N

"Menu" appears on the panel display.

2 Press [▲] or [▼] to display "Language".

```
Menu:
 Language
```

3 Press [Enter].

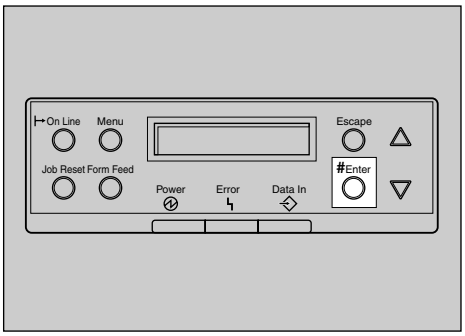

ZDJS021N

The following message appears on the panel display.

```
Language:
*English
```

4 Press [▲] or [▼] until the language you want to select appears on the panel display.

5 Press [Enter]. Wait for two seconds.

"Menu" appears on the panel display.

6 Press [On Line].

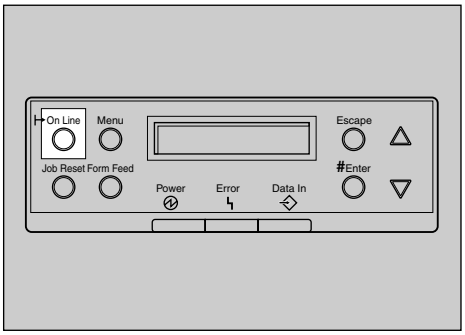

ZDJS022N

"Ready " message appears on the panel display.

```
Ready
```

Test Printing

Test print in order to check that the printer prints normally. Test printing checks the printer actions, and does not test the connection to the host computer.

Here, you will print the Configuration Page to check the options.

1 Press 【Menu】.

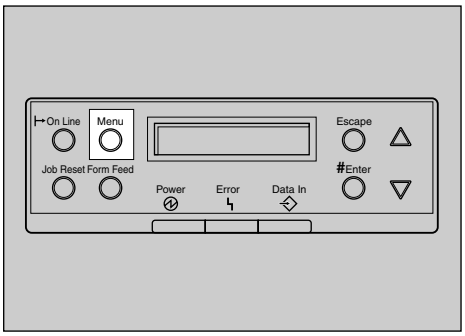

ZDJS001N

"Menu" appears on the panel display.

```
Menu:
 Paper Input
```

2 Press 【▲】 or 【▼】 to display "List/Test Print", and then press 【OK】.

```
Menu:
 List/Test Print
```

The menu for selecting the contents to be test printed is shown.

3 Press 【▲】 or 【▼】 to display the "Config. Page", and then press 【OK】.

```
List/Test Print:
 Config. Page
```

The following message appears and the Configuration Page is printed.

```
Printing...
```

Note

❒ If printing is not normal, check to see if an error message is shown on the panel display. If there is an error message, see "*Troubleshooting*" in Maintenance Guide 2.

4 Check the options.

Note

❒ For details about the Configuration Page, see "*Interpreting the Configuration Page*" in Administrator Reference 2.

5 Press 【On Line】.

"Ready " appears on the panel display.

Connecting the Printer

Connection to a Network

1 **Turn off the power switch.**

2 **Loop the network interface cable and attach the ferrite core.**

Note

❒ The network interface cable loop should be about 15 cm (6") (①) from the end of the cable (on the end closest to the printer).

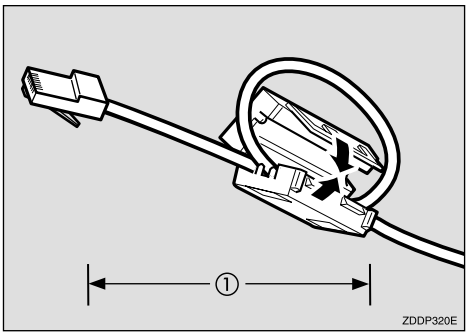

3 **Connect the network interface cable to the port on the right side of the printer.**

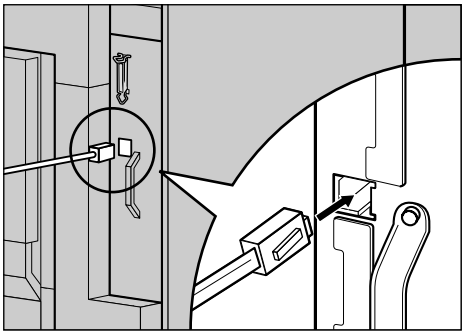

4 **Connect the other end of the network interface cable to network equipment, such as a hub.**

Reference

For details about settings for the network environment, see Administrator Reference 1.

Reading the LED lamps

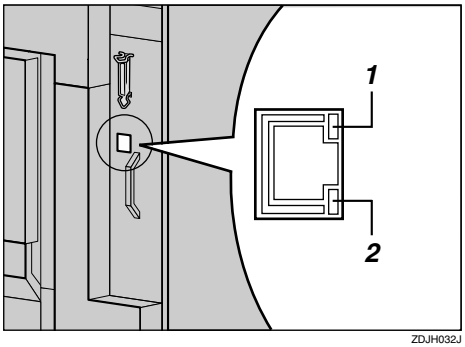

1. **Yellow: Lights up when 100BASE-TX is being used. Turns off when 10BASE-T is being used.**

2. **Green: Lights up when the printer is connected properly to the network.**

Parallel Connection

Use an interface cable to connect the printer to the host computer with a parallel connection. The parallel interface cable is not provided with the printer.

Note

- ❒ Printer's parallel connection is a standard bidirectional interface. It requires a standard 36-pin parallel cable compliant with IEEE 1284 and a parallel port available on the host computer.
- ❒ Use shielded interface cables. Using a cable other than a shielded cable could result in radio interference noise.

1 **Turn off the printer and host computer power.**

2 **Connect the cable to the Parallel Port on the right side of the printer, and then fasten with both clasps.**

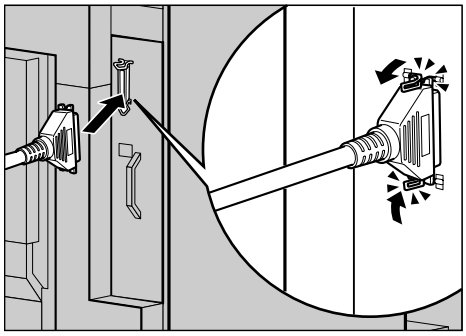

ZDJH033J

3 **Connect the other end of the cable to the interface connector of the host computer.**

Reference

For details about settings for printing with a parallel connection, see Printer Client Reference 1.

INDEX

1394 Interface Unit Type1045, 21, 32
4-bin Mailbox/2 Tray Finisher Port, 4

B

Bypass Tray, 2

C

Caution, ii
Checking the Contents of the Box, 10
Configuration Page, 69
Connecting the Printer, 70
Connection to a Network, 70
Connector, 4
Controller Board, 2

D

Development Unit, 5
Display Language, 68
Duplex Unit
  Duplex Feed Unit, 21
  Duplex Reversal Unit, 20
Duplex Unit Port, 4
Duplex Unit Type 3800C, 42
Dustproof Filter, 4

E

Energy Star, iv
Ethernet Port, 2
Exclusive Screwdriver, 22
External Tray, 4

F

Front Cover, 2
Fuser Oil Unit, 5, 15
Fusing Unit, 5

G

Guide to the Printer
  Exterior -Front View, 2
  Exterior -Rear View, 4
  Inside, 5
  Operation Panel, 6

I

Inner Cover, 5
Installing Options, 18
Installing the Duplex Unit
  Duplex Feed Unit, 47
  Duplex Reversal Unit, 45
  Stand, 42
Installing the Paper Feed Unit, 22

L

Loading Paper, 61

M

Mail Bin Type 3800C (4-bin Mailbox), 20, 55
Memory Unit Type B (SDRAM Module), 21, 30

O

Operation Panel, 2, 6

P

Paper Bank PS470
  (2000-sheet Large Capacity Tray), 20, 28, 66
PAPER FEED UNIT Type 3800C (500×1),
  20, 23, 62
PAPER FEED UNIT Type 3800C (500×2),
  20, 25, 62
Parallel Connection, 71
Parallel Port, 2
Photoconductor Unit, 5
Power Port, 4
Power Switch, 2
Printer Hard Disk Type 3800C, 21, 39

R

Reading the LED Lamps, 70

S

Safety Information, ii
Setting Up, 7
SR770 (2 Tray Finisher), 20, 48
Standard Tray, 2

T

Test Printing, 69
Toner Cartridge, 5, 59
Tray 1, 2, 61
Tray 2, 2, 62
Turning the Power On, 67

U

Unpacking the Printer, 12
Upper Cover, 2
Upper Left Cover, 4
Upper Right Cover, 2
User Account Enhance Unit Type B, 21
User Account Enhance Unit TypeB, 36

W

Warning, ii
Waste Toner Bottle, 5
Where to Put the Printer, 7

Note to users in the United States of America

Notice:

This equipment has been tested and found to comply with the limits for a Class B digital device, pursuant to Part 15 of the FCC Rules. These limits are designed to provide reasonable protection against harmful interference in a residential installation. This equipment generates, uses and can radiate radio frequency energy and, if not installed and used in accordance with the instructions, may cause harmful interference to radio communications.

However, there is no guarantee that interference will not occur in a particular installation. If this equipment does cause harmful interference to radio or television reception, which can be determined by turning the equipment off and on, the user is encouraged to try to correct the interference by one more of the following measures:

Reorient or relocate the receiving antenna.

Increase the separation between the equipment and receiver.

Connect the equipment into an outlet on a circuit different from that to which the receiver is connected.

Consult the dealer or an experienced radio/TV technician for help.

Warning

Changes or modifications not expressly approved by the party responsible for compliance could void the user's authority to operate the equipment.

Caution (in case of 100BaseTX environment):

Properly shielded and grounded cables (STP) and connectors must be used for connections to host computer (and/or peripheral) in order to meet FCC emission limits.

Declaration of Conformity

Product Name: Laser Printer
Model Number: AP3800C/AP828/SLP38c/DSc38
Responsible party: Ricoh Corporation
Address: 5 Dedrick Place, West Caldwell, NJ 07006
Telephone number: 973-882-2000
This device complies with part 15 of FCC Rules.
Operation is subject to the following two conditions:

1. This device may not cause harmful interference, and
2. this device must accept any interference received,

including interference that may cause undesired operation.

Properly shielded cables must be used for connections to host computer (and/or peripheral) in order to meet FCC emission limits.

Network interface cable with ferrite core must be used for RF interference suppression.

Note to users in Canada

Note:

This Class B digital apparatus complies with Canadian ICES-003.

Remarque concernant les utilisateurs au Canada

Avertissement:

Cet appareil numérique de la classe B est conforme à la norme NMB-003 du Canada.

In accordance with IEC 60417, this machine uses the following symbols for the main power switch:

❙ means POWER ON.
○ means POWER OFF.
⏻ means STAND-BY

Copyright © 2001

UE USA G060-6517A

Operating Instructions

Maintenance Guide 1

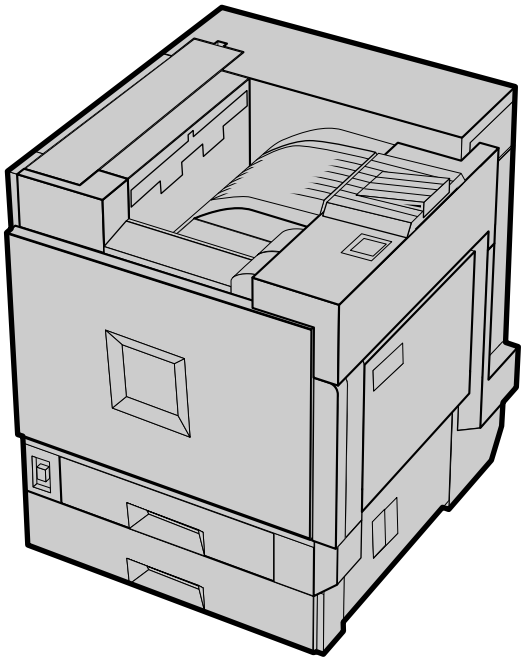

Read this manual carefully before you use this product and keep it handy for future reference.
For safety, please follow the instructions in this manual.

Introduction

This manual contains detailed instructions on the operation and maintenance of this machine. To get maximum versatility from this machine all operators should carefully read and follow the instructions in this manual. Please keep this manual in a handy place near the machine.

Please read the Safety Information before using this machine. It contains important information related to USER SAFETY and PREVENTING EQUIPMENT PROBLEMS.

Trademarks

Microsoft, Windows and Windows NT are registered trademarks of Microsoft Corporation in the United States and/or other countries.

IPS-PRINT™ Printer Language Emulation Copyright 1999-2000, XIONICS DOCUMENT TECHNOLOGIES, INC., All Rights Reserved.

Other product names used herein are for identification purposes only and might be trademarks of their respective companies. We disclaim any and all rights in those marks.

Notes:

Some illustrations might be slightly different from your machine.

Certain options might not be available in some countries. For details, please contact your local dealer.

Note

The proper names of the Windows operating systems are as follows:

- Microsoft® Windows® 95 operating system
- Microsoft® Windows® 98 operating system
- Microsoft® Windows® Millennium Edition (Windows Me)
- Microsoft® Windows ® 2000 Professional
- Microsoft® Windows ® 2000 Server
- Microsoft® Windows NT® Server operating system Version 4.0
- Microsoft® Windows NT® Workstation operating system Version 4.0

Safety Information

When using your printer, the following safety precautions should always be followed.

Safety During Operation

In this manual, the following important symbols are used:

⚠ ***WARNING:***
Indicates a potentially hazardous situation which, if instructions are not followed, could result in death or serious injury.

⚠ ***CAUTION:***
Indicates a potentially hazardous situation which, if instructions are not followed, may result in minor or moderate injury or damage to property.

⚠ *WARNING:*

- ***Disconnect the power plug (by pulling the plug, not the cable) if the power cable or plug becomes frayed or otherwise damaged.***
- ***To avoid hazardous electric shock or laser radiation exposure, do not remove any covers or screws other than those specified in this manual.***
- ***Turn off the power and disconnect the power plug (by pulling the plug, not the cable) if any of the following conditions exists:***
  - ***You spill something into the equipment.***
  - ***You suspect that your equipment needs service or repair.***
  - ***Your equipment's cover has been damaged.***
- ***Do not incinerate spilled toner or used toner. Toner dust might ignite when exposed to an open flame.***
- ***Disposal can take place at our authorized dealer or at appropriate collection sites.***
- ***Dispose of the used toner cartridge in accordance with the local regulation.***

⚠ *CAUTION:*

- *Protect the equipment from dampness or wet weather, such as rain, snow, and so on.*
- *Unplug the power cord from the wall outlet before you move the equipment. While moving the equipment, you should take care that the power cord will not be damaged under the equipment.*
- *When you disconnect the power plug from the wall outlet, always pull the plug (not the cable).*
- *Do not allow paper clips, staples, or other small metallic objects to fall inside the equipment.*
- *Keep toner (used or unused) and toner cartridge out of the reach of children.*
- *For environmental reasons, do not dispose of the equipment or expended supply waste at household waste collection points. Disposal can take place at an authorized dealer or at appropriate collection sites.*
- *The inside of the machine could be very hot. Do not touch the parts with a label indicating the "hot surface". Otherwise it could cause a personal burn.*
- *Our products are engineered to meet high standards of quality and functionality, and we recommend that you only use the expendable supplies available at an authorized dealer.*

ENERGY STAR Program

ENERGY STAR®

As an ENERGY STAR Partner, we have determined that this machine model meets the ENERGY STAR Guidelines for energy efficiency.

The ENERGY STAR Guidelines intend to establish an international energy-saving system for developing and introducing energy-efficient office equipment to deal with environmental issues, such as global warming.

When a product meets the ENERGY STAR Guidelines for energy efficiency, the Partner shall place the ENERGY STAR logo onto the machine model.

This product was designed to reduce the environmental impact associated with office equipment by means of energy-saving features, such as Low-power mode.

❖ Low-power Mode (Energy Saver mode)

This printer automatically lowers its power consumption 60 minutes after the last operation has been completed. To exit Low-power (Energy Saver) mode, press any key on the operation panel. For details about how to configure Energy Saver mode, see "*Making Printer Settings with the Operation Panel*" in Administrator Reference 2 as a PDF file on the CD-ROM.

❖ Specifications

Energy Saver mode	Power Consumption	45 W or less
	Default Time	60 minutes
	Recovery Time	120 seconds or less

How to Read This Manual

Symbols

In this manual, the following symbols are used:

⚠ ***WARNING:***
This symbol indicates a potentially hazardous situation which, if instructions are not followed, could result in death or serious injury.

⚠ ***CAUTION:***
This symbol indicates a potentially hazardous situation which, if instructions are not followed, may result in minor or moderate injury or damage to property.

* The statements above are notes for your safety.

Important
If this instruction is not followed, paper might be misfed, or data might be lost. Be sure to read this.

Preparation
This symbol indicates the prior knowledge or preparations required before operating.

Note
This symbol indicates precautions for operation, or actions to take after misoperation.

Limitation
This symbol indicates numerical limits, functions that cannot be used together, or conditions in which a particular function cannot be used.

Reference
This symbol indicates a reference.

[ ]
Keys that appear on the machine's panel display.

Keys and buttons that appear on the computer's display.

【 】
Keys built into the machine's operation panel.

Keys on the computer's keyboard.

TABLE OF CONTENTS

1. Replacing Consumables and Maintenance Kit

Detaching the SR770 (2 Tray Finisher) 1
Opening and Closing the Duplex Reversal Unit 2
Replacing the Toner Cartridge 3
Replacing the Fuser Oil Unit 6
Replacing the Photoconductor Unit 10
Replacing the Development Unit 14
Replacing the Fusing Unit 18
Replacing the Dustproof Filter 23
Replacing the Waste Toner Bottle 25
Replacing the Paper Feed Rollers 27

2. Clearing and Adjusting the Printer

Cautions to Take When Cleaning 31
Cleaning the Registration Roller 32
Cleaning the DustProof Glass 33
Adjusting the Color Registration 34
Auto Adjust 34
Fuser Adjust 35
Manual Adjust 38
Test Sheet Samples 40
Adjusting the Image Density 42
Adjusting the Registration of the Trays 43

3. Appendix

Removing Misfed Paper in the Duplex Feed Unit 45
When the Front Cover Does Not Close 48
Consumables 50
INDEX 52

1. Replacing Consumables and Maintenance Kit

Detaching the SR770 (2 Tray Finisher)

There are times when you might have to detach the 2 Tray Finisher from the printer to remove misfed paper. This section describes how to detach the 2 Tray Finisher.

1 Hold the handle at the top of the 2 Tray Finisher firmly with one hand, pull the 2 Tray Finisher straight out, and let go when it stops.

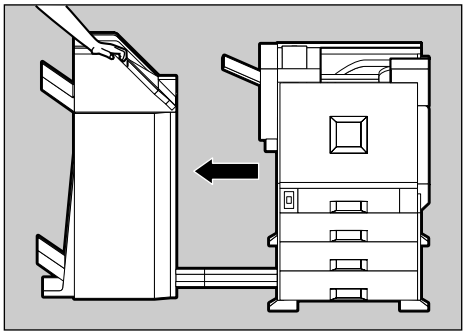

ZDJP201J

The 2 Tray Finisher is detached from the printer.

2 Use both hands to push it straight back in, and let go when it clicks into place.

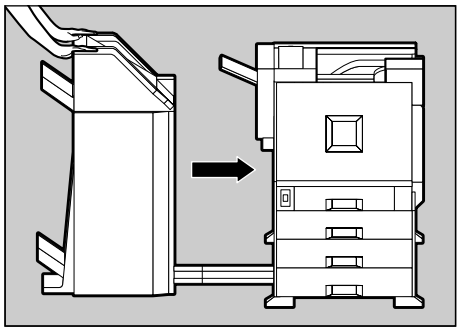

ZDJP202J

The 2 Tray Finisher is reattached to the printer.

Important

- ❒ Be sure to attach the 2 Tray Finisher to the printer after closing the Duplex Reversal Unit. See p.2 “Opening and Closing the Duplex Reversal Unit”.

Opening and Closing the Duplex Reversal Unit

There are times when you might have to detach the Duplex Reversal Unit to remove misfed paper. This section describes how to detach the Duplex Reversal Unit.

1 Push up the lock release button and keep it in place.

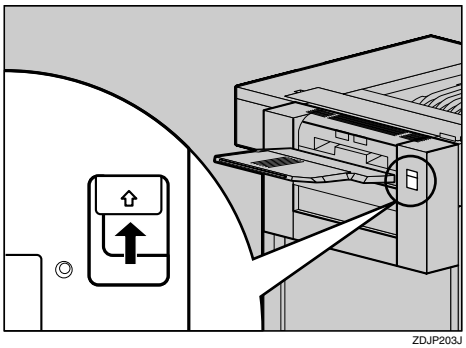

ZDJP203J

2 Lower the Duplex Reversal Unit slowly until it stops.

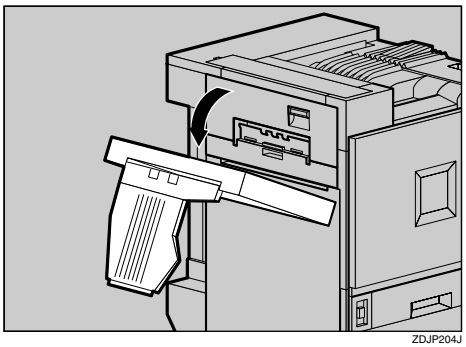

ZDJP204J

Important

- ❒ Open the Duplex Reversal Unit after detaching the 2 Tray Finisher from the printer. See p.1 "Detaching the SR770 (2 Tray Finisher)".

Note

- ❒ You do not have to remove the External Tray even if the 2 Tray Finisher is attached.

The Duplex Reversal Unit is opened.

3 Raise the Duplex Reversal Unit slowly with both hands, and push it in until it clicks into place.

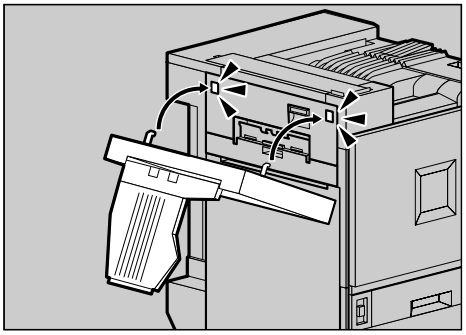

ZDJP205J

The Duplex Reversal Unit is closed.

Important

- ❒ Attach the Duplex Reversal Unit after closing the upper left cover of the printer.

Replacing the Toner Cartridge

⚠ ***WARNING:***

- ***Do not incinerate spilled toner or used toner. Toner dust is flammable and might ignite when exposed to an open flame. Disposal should take place at an authorized dealer or an appropriate collection site. If you dispose of the used toner cartridges yourself, dispose of them according to local regulations.***

⚠ ***CAUTION:***

- *The inside of the machine becomes very hot. Do not touch the parts with a label indicating a "hot surface". Touching a "hot surface" could result in a burn.*
- *Keep toner (used or unused) and the toner cartridge out of reach of children.*
- *Our products are engineered to meet the highest standards of quality and functionality. When purchasing expendable supplies, we recommend using only those provided by an authorized dealer.*

Note

❒ The actual number of printed pages will differ depending on the paper type, size, contents and settings. For more information, see p.50 “Toner cartridge”.

If "Add Toner" appears on the panel display, replace the toner cartridge.

```
Add Toner
XXX
```

or

```
Add Toner
XXX/XXX
```

Note

❒ A combination of one to four colors, yellow, magenta, cyan, black, is displayed in "XXX".

❒ If cyan or magenta or yellow toner runs out, you can print in black and white mode using the black toner. Change the color mode setting to "Black and White" from the printer driver .

❒ If black toner runs out, printing is not possible until the black toner cartridge is replaced.

1 While pushing the lock button on the upper right cover of the printer (①), open the upper right cover (②).

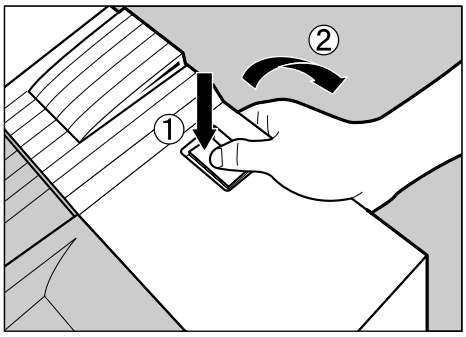

ZDJT006J

From the end, the toner cartridges are installed in the order of magenta (M), cyan (C), yellow (Y), and black (K).

2 Remove the toner cartridge for the color you want to replace.

❶ Unhook the green hook on the toner cartridge with one hand.

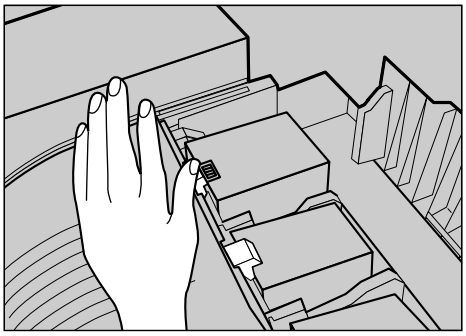

ZDJT999J

❷ Holding the toner cartridge with the other hand, pull out the cartridge up slowly.

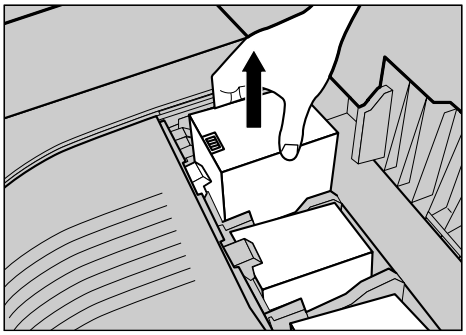

ZDJT201J

Important

- ❒ Do not shake the removed toner cartridge. The remaining toner might scatter.

Note

- ❒ Depending on the setting up environment, toner might be left in a toner cartridge. In such case, reinstall the toner cartridge.

3 Take out a new toner cartridge from the box.

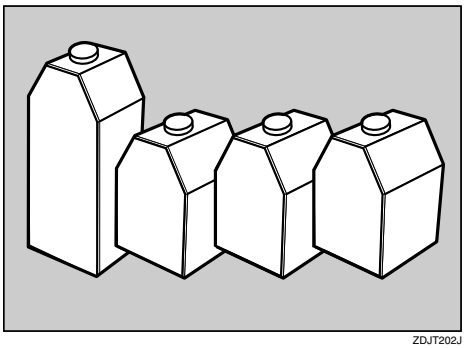

ZDJT202J

Note

- ❒ The black toner cartridge contains more than the other toner cartridges.

4 Shake the toner cartridge back and forth 5-6 times.

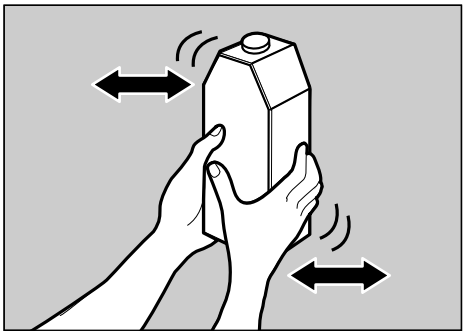

ZDJT203J

5 Holding the toner cartridge with the metal contact area in front, attach in the direction of the arrow.

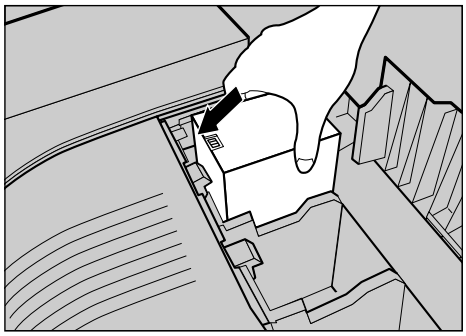

ZDJT004J

Important

- ❒ Do not touch the metal contact point with your fingers.

6 Insert the toner cartridge slowly until the green hook snaps on the metal contact area.

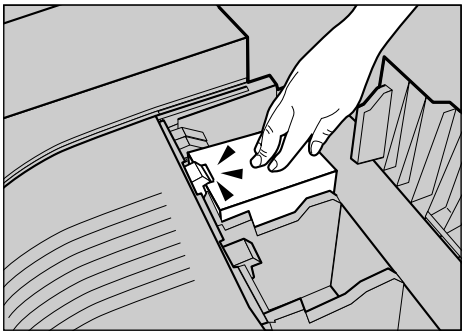

ZDJT005J

Important

- ❒ Do not install and remove the toner cartridges over and over. This could result in a toner leak.

7 Close the upper right cover.

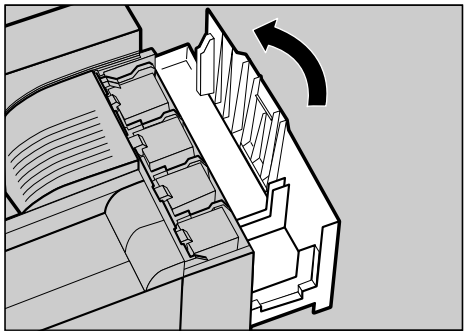

ZDJH042J

The following message appears on the panel display. Please wait a while.

```
Loading Toner...
```

Important

- ❒ Do not turn off the power switch during "Loading Toner..." appears on the panel display to avoid a printer malfunction.

Replacing the Fuser Oil Unit

1

⚠ ***CAUTION:***

- *The Fusing Unit becomes very hot. When installing the new Fuser Oil Unit, turn off the printer and wait about an hour. After that, install the new Fusing Unit. Not waiting for the unit to cool down can result in a burn.*

If "Replace Fuser Oil Unit (TypeG)" appears on the panel display, replace the Fuser Oil Unit.

```
Replace Fuser
Oil Unit (TypeG)
```

1 Turn off the power switch and unplug the power cable.

Important

❒ Be sure to wait about an hour to prevent a burn.

2 If 2 Tray Finisher is installed, detach it from the printer.

Reference

See p.1 “Detaching the SR770 (2 Tray Finisher)”

3 If the Duplex Unit is installed, open the Duplex Reversal Unit.

Reference

See p.2 “Opening and Closing the Duplex Reversal Unit”

4 If the External Tray is attached to the printer, raise it in the direction of the arrow (①), and remove it (②).

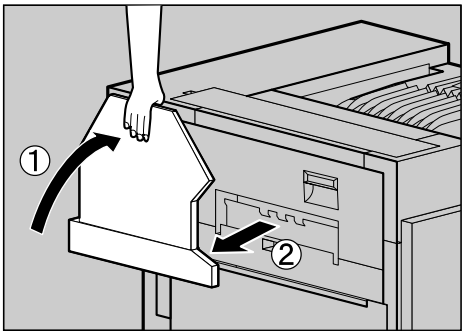

ZDJP038J

5 Pull out the left cover of the printer slowly.

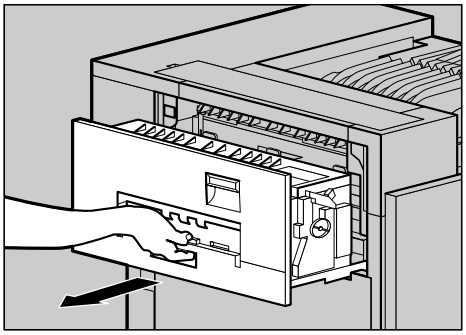

ZDJH047J

6 Open the upper left cover.

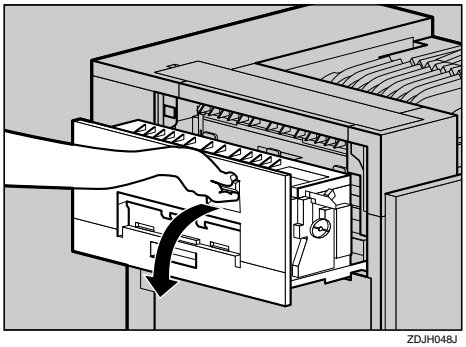

ZDJH048J

7 **Holding the green handle, pull up the Fusing Unit slowly in the direction of the arrow.**

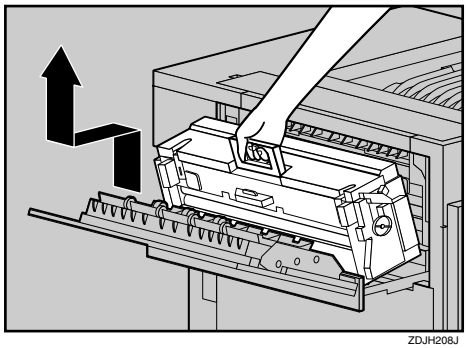

ZDJH208J

Important

- ❒ Do not touch any areas other than the handle.

8 **Put the removed Fusing Unit in a stable and level place.**

9 **Lift the Fuser Oil Unit in the direction of the arrow to remove it, and put it in a stable and level place.**

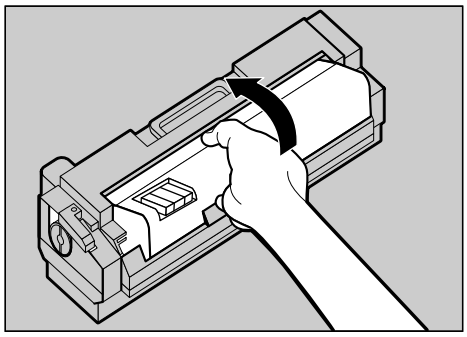

ZDJH052E

Important

- ❒ Do not touch inside of the Fusing Unit.
- ❒ Be careful no to touch the area other than the shown in the illustration.

10 **Take out the Fuser Oil Unit from the bag, and remove seal (①), and then remove seal (②) as shown in the illustration.**

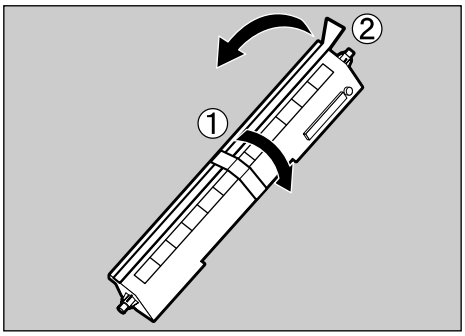

ZDJH053J

Note

- ❒ Be sure to remove seal (①), and then pull it out in a level manner.

Important

- ❒ Be sure to remove the seals to avoid printer malfunction.
- ❒ Be sure to remove seal (①) first, and then remove seal (②) to avoid oil leak.
- ❒ Be sure to put the Fuser Oil Unit in a stable and level place to avoid oil leak.
- ❒ There is oil on the removed seals and fuser oil roller. Be careful not to let them come in contact with your clothes.

11 Match (▲) on the front of the Fuser Oil Unit and the arrow on the Fusing Unit as shown in the illustration.

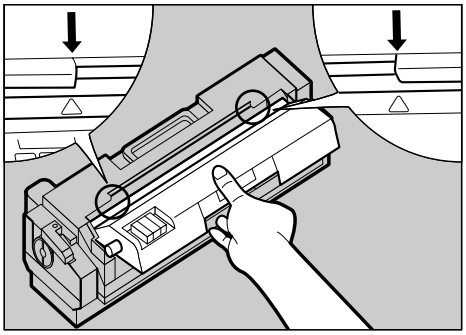

ZDJH055J

Important

- ❒ Be careful not to get oil on the metal point of the left side of the Fuser Oil Unit.

12 Insert the left and right protrusions of the Fuser Oil Unit into the white holders of the Fusing Unit (①), and then move the Fuser Oil Unit in the direction shown by the arrow (②) to attach the Fuser Oil Unit to the Fusing Unit.

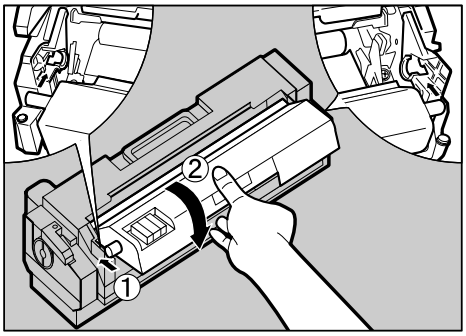

ZDJH054J

13 Holding the green handle with one hand, use your other hand to push the front area of the handle to create a slight slant, and push the Fusing Unit slowly to the back.

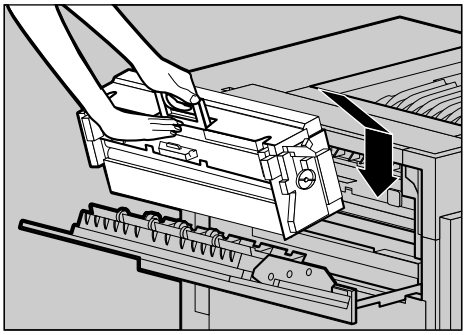

ZDJH050E

Note

- ❒ Confirm that the Fuser Oil Unit is facing the inside of the printer.

At this point, make sure the Fusing Unit is on the stand properly.

14 Close the upper left cover (①) and push the handle slowly (②) to the back until it clicks into place.

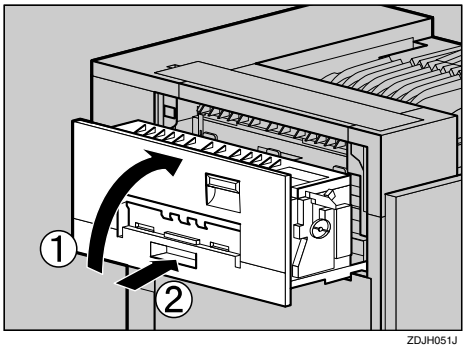

ZDJH051J

15 Place the old Fuser Oil Unit into the bag which contained the new Fuser Oil Unit, and seal the bag.

16 If you removed the External Tray in step 4, reattach it to the printer. Insert the hooks of the External Tray into the printer slits, and lower it toward you.

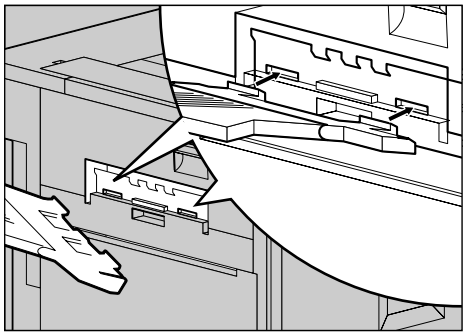

17 If the Duplex Unit is installed, close the Duplex Reversal Unit.

Reference

See p.2 "Opening and Closing the Duplex Reversal Unit"

18 If the 2 Tray Finisher was installed, reattach the 2 Tray Finisher to the printer.

Reference

See p.1 "Detaching the SR770 (2 Tray Finisher)"

19 Plug in the power cable and turn on the power switch.

Note

❒ If you dispose of the used toner cartridges by yourself, dispose of them according to local regulations.

Replacing the Photoconductor Unit

If "Replace Black PCU (Type F)" appears on the panel display, replace the black Photoconductor Unit.

```
Replace Black
PCU (Type F)
```

If "Replace Color PCU (Type A)" appears on the panel display, replace the three color Photoconductor Units.

```
Replace Color
PCU (Type A)
```

1 Turn off the power switch and unplug the power cable.

2 Open the front cover slowly by pulling down from the two areas on the left and right.

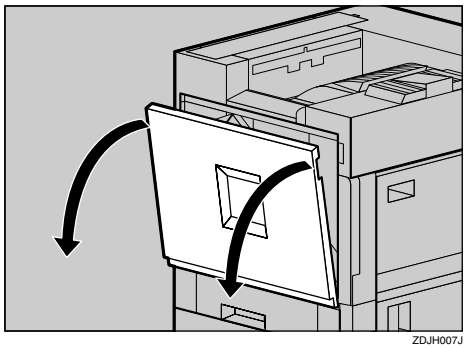

ZDJH007J

3 Take out the green screwdriver.

Use this screwdriver for all attachment and detachment of screws.

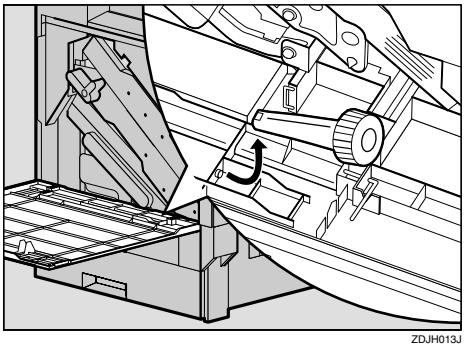

ZDJH013J

4 Turn the light brown lever counterclockwise.

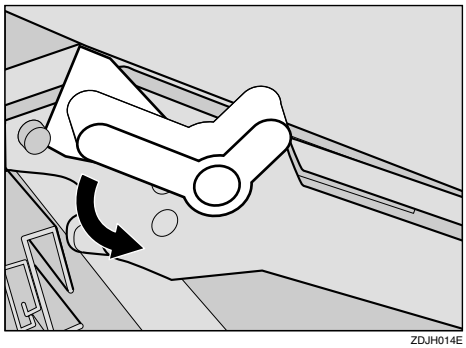

ZDJH014E

5 Loosen two screws that are fastening the inner cover using provided screwdriver.

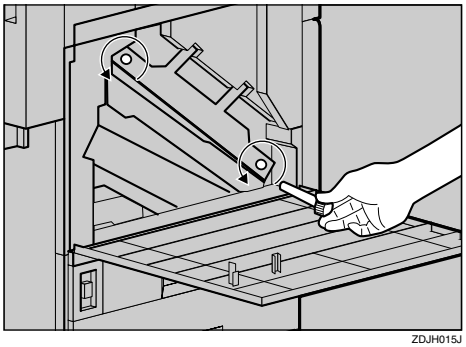

ZDJH015J

You cannot remove these two screws.

6 Lift the inner cover until it clicks into place and holds.

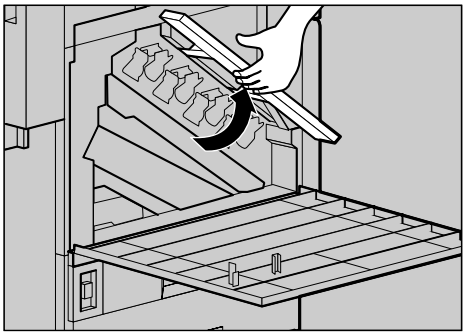

ZDJH016J

The Photoconductor Units are installed as shown in the illustration. The black Photoconductor Unit is at the upper left period. The other three are color Photoconductor Units.

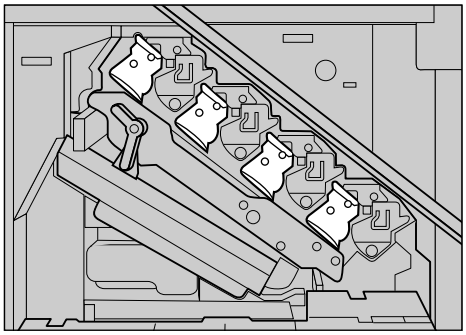

ZDJH045J

7 Remove the Photoconductor Unit you want to replace.

For black, remove the upper left one, and for color, remove the three on the right.

❶ Move the green hook slowly to the right as shown in the illustration. The green hook is located on the upper right of the Photoconductor Unit.

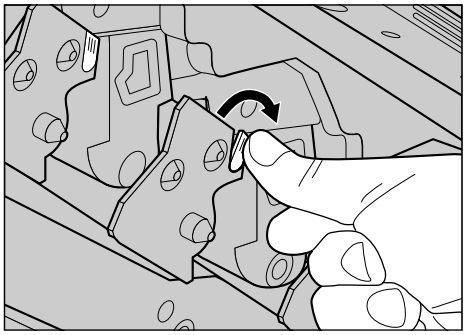

ZDJX701J

❷ Grip the green areas at the top and bottom of the Photoconductor Unit, and pull slowly until you can see all of the green handle.

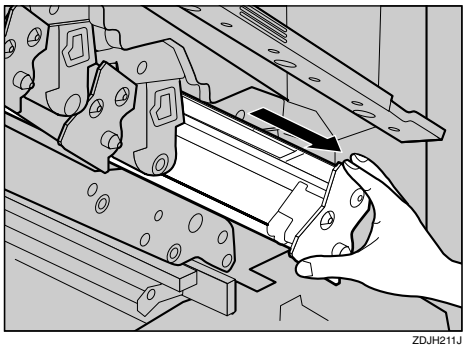

ZDJH211J

Important

❒ Pulling out the Photoconductor Unit quickly might cause it to drop.

❸ **Lift and hold the green handle at the top (①), and pull out the unit slowly (②).**

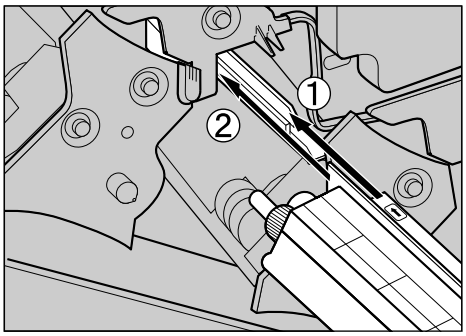

ZDJH227E

8 Install a new Photoconductor Unit.

For black, install one, and for color, install three.

❶ **Take the unit out from the bag.**

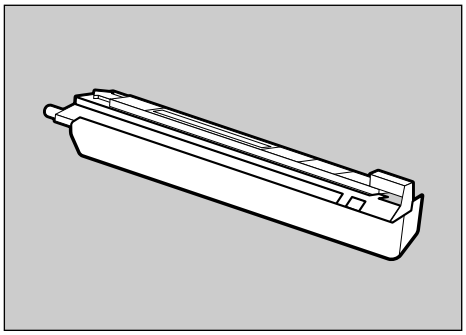

ZDJH221J

Important

❒ Do not remove the cover that is attached to the bottom of the Photoconductor Unit at this time.

❷ **Place the Photoconductor Unit in your hand, and remove the adhesive tape at the tip of the unit.**

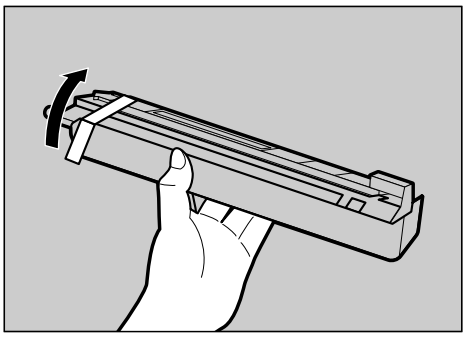

ZDJH222J

❸ **Match the green arrow at the tip of the Photoconductor Unit to the rail inside the printer.**

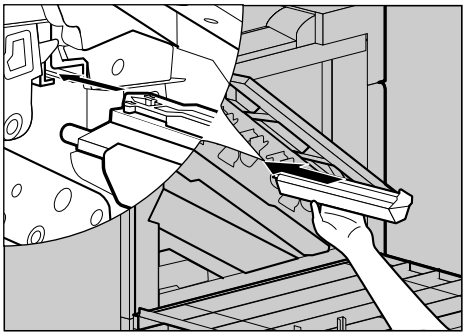

ZDJH223J

Important

❒ Make sure the green arrow fits securely on the rail before proceeding to the next step.

❹ **Push the front of the Photoconductor Unit slowly, slide the unit on the cover, and push in until it stops.**

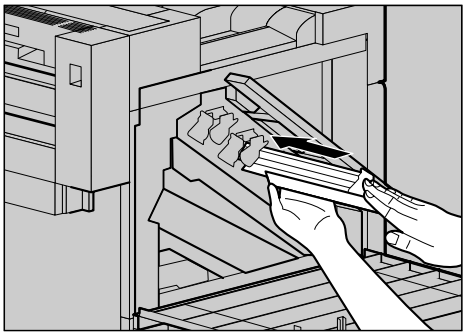

ZDJH224J

Important

❒ If you do not attach the green arrow of the Photoconductor Unit securely to the rail, you might damage the Photoconductor Unit.

❒ Do not touch the light-sensitive area of the Photoconductor Unit.

❺ **Remove the cover and push in the Photoconductor Unit until it stops.**

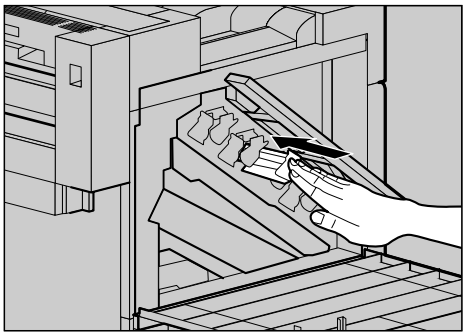

ZDJX702E

9 Lower the inner cover slowly.

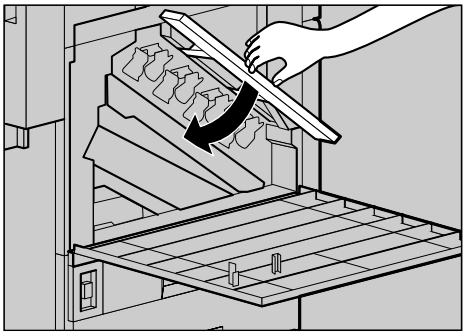

ZDJH018J

10 Tighten two screws using provided screwdriver.

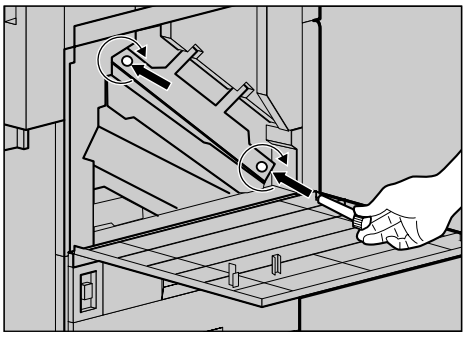

ZDJH019J

Note

❒ Be sure to return the provided screwdriver to its original position on the back of the front cover.

11 Turn the light brown lever clockwise.

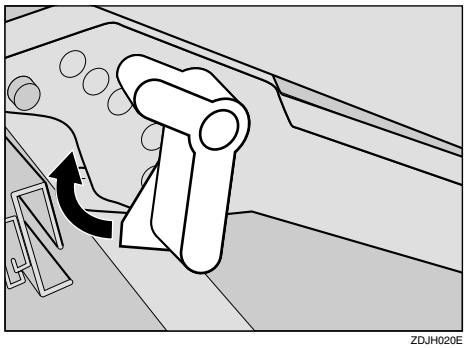

ZDJH020E

12 Close the front cover slowly by pushing the two areas on the left and right.

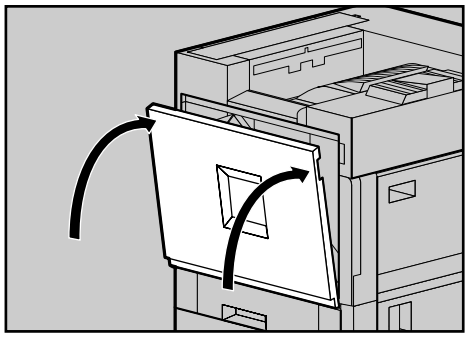

ZDJH041J

13 Plug in the power cable and turn on the power switch.

The following message appears on the panel display. The printer starts calibration. Please wait until it stops.

```
Calibrating...
```

Important

❒ Do not turn off the power switch during calibration to avoid a printer malfunction.

Replacing the Development Unit

If "Replace Black Dev. Unit(TypeD)" appears on the panel display, replace the black Development Unit.

```
Replace Black
Dev. Unit(TypeD)
```

If "Replace Color Dev. Unit(TypeB)" appears on the panel display, replace the three color (CMY) Development Units.

```
Replace Color
Dev. Unit(TypeB)
```

Note

- ❒ A dustproof filter is attached to the black Development Unit. When replacing the black Development Unit, also replace the dustproof filter. See p.23 “Replacing the Dustproof Filter”.
- ❒ When replacing the black Development Unit, clean the registration roller. See p.32 “Cleaning the Registration Roller”.

1 Turn off the power switch and unplug the power cable.

2 Open the front cover slowly by pulling down from the two areas on the left and right.

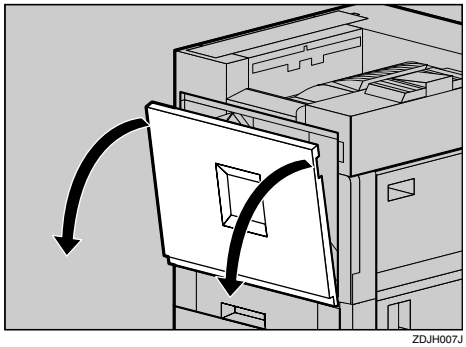

ZDJH007J

3 Take out the green screwdriver.

Use this screwdriver for all attachment and detachment of screws.

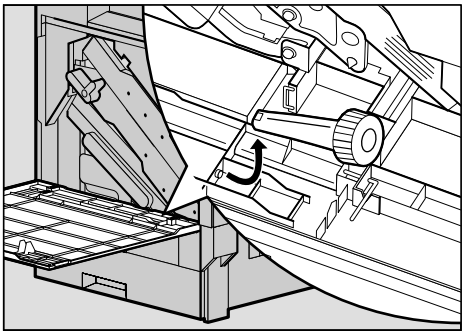

ZDJH013J

4 Turn the light brown lever counterclockwise.

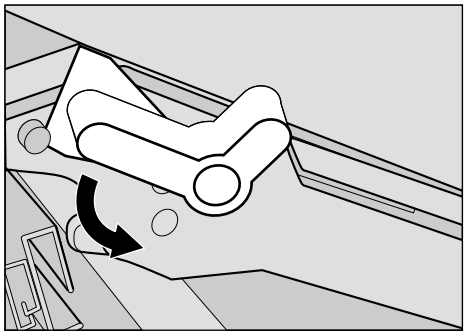

ZDJH014E

5 Loosen two screws that are fastening the inner cover using provided screwdriver.

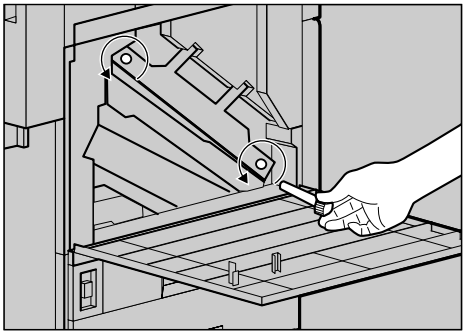

ZDJH015J

You cannot remove these two screws.

6 Lift the inner cover until it clicks into place and holds.

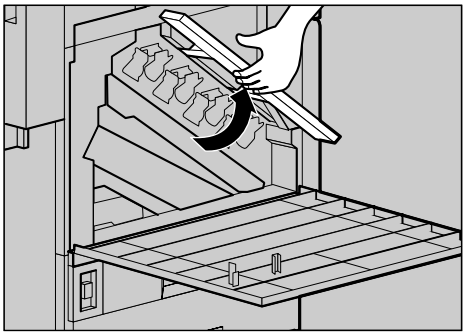

ZDJH016J

The Development Unit is installed shown in the illustration. Starting from the upper left, the units are attached in the order of black (K), yellow (Y), cyan (C), and magenta (M).

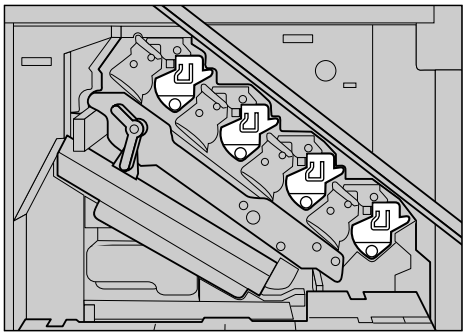

ZDJH046J

7 Remove the Development Unit.

The procedure for removing the unit is the same for all four colors.

❶ Hook your finger on the green tab in front of the Development Unit you want to replace, and pull it out halfway.

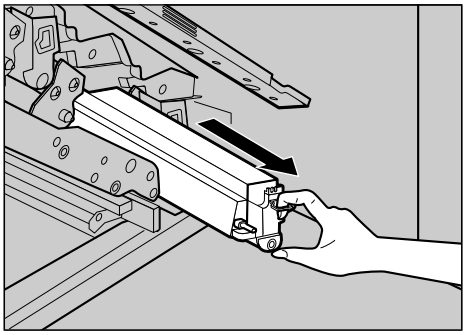

ZDJH225J

Important

- ❒ Pulling out the Development Unit quickly might cause it to drop.

❷ Hold the right side of the Development Unit with your right hand, and pull out the unit slowly.

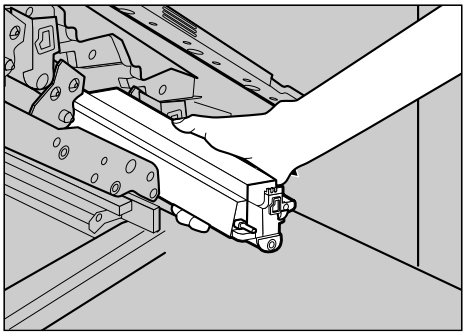

ZDJH993J

Important

- ❒ Be careful not to touch the right side of the Photoconductor Unit.
- ❒ Be careful not to let it get in contact with your hands or clothes.

8 Install a new Development Unit.

The procedure for attaching the Development Unit is the same for all four colors.

❶ Take the unit out from the bag.

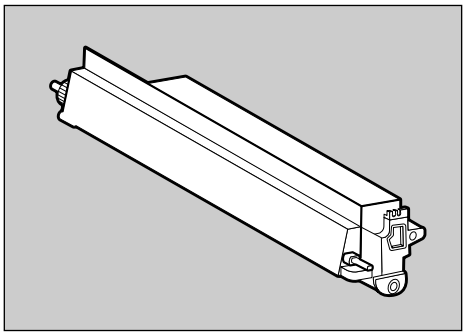

ZDJH226J

❷ **Insert the Development Unit along the rail, and push in slowly until it stops.**

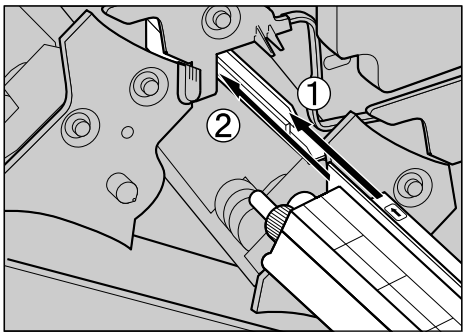

ZDJH227E

❸ **Holding the Development Unit, pull out the tape slowly in a level manner.**

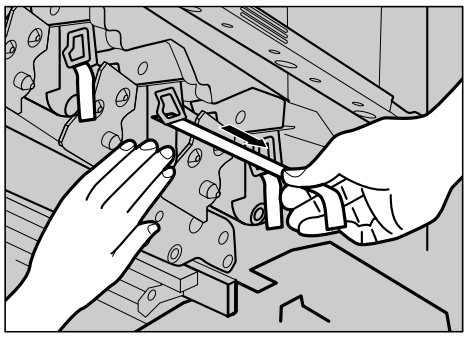

ZDJH039J

Important

- ❒ Be sure to pull out the tape to avoid printer malfunction during operation.
- ❒ The removed tape is dirty. Be careful not to let it get in contact with your hands or clothes.

9 Lower the inner cover slowly.

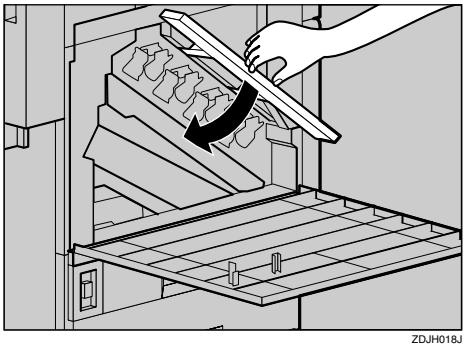

ZDJH018J

10 Tighten two screws using provided screwdriver.

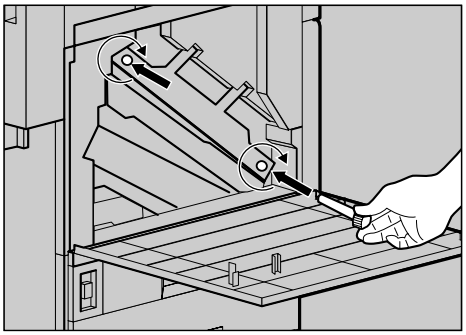

ZDJH019J

Note

- ❒ Be sure to return the provided screwdriver to its original position on the inside of the front cover.

11 Turn the light brown lever clockwise.

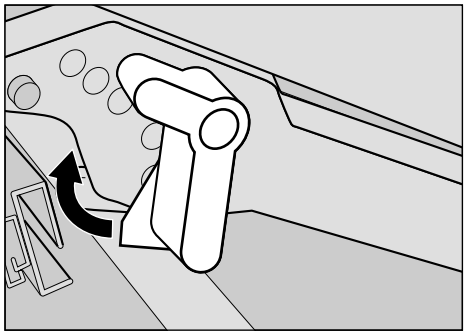

ZDJH020E

12 Close the front cover slowly by pushing the two areas on the left and right.

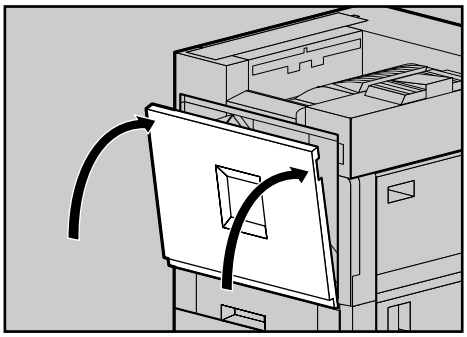

ZDJH041J

13 Plug in the power cable and turn on the power switch.

"Please Wait " appears on the panel display, and initial adjustments begin. Please wait until it stops.

```
Please Wait
```

Important

- ❒ Do not turn off the power switch during adjustments to avoid a printer malfunction.

Replacing the Fusing Unit

1

⚠ ***CAUTION:***

- *The Fusing Unit becomes very hot. When installing the new Fusing Unit, turn off the printer and wait about an hour. After that, install the new Fusing Unit. Not waiting for the unit to cool down can result in a burn.*

If "Replace Fusing Unit (Type C)" appears on the panel display, replace the Fusing Unit.

```
Replace Fusing
Unit (Type C)
```

1 Turn off the power switch and unplug the power cable.

Important

❒ Be sure to wait about an hour to prevent a burn.

2 If the 2 Tray Finisher is installed, detach it from the printer.

Reference

See p.1 “Detaching the SR770 (2 Tray Finisher)”

3 If the Duplex Unit is installed, open the Duplex Reversal Unit.

Reference

See p.2 “Opening and Closing the Duplex Reversal Unit”

4 If the External Tray is attached to the printer, raise it in the direction of the arrow (①), and remove it (②).

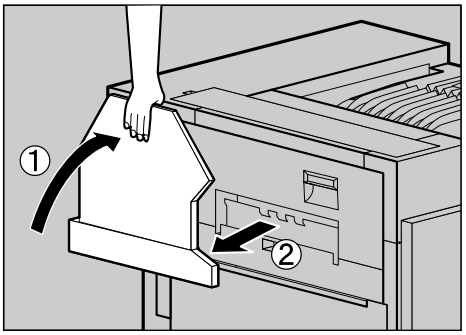

ZDJP038J

5 Pull out the left cover of the printer.

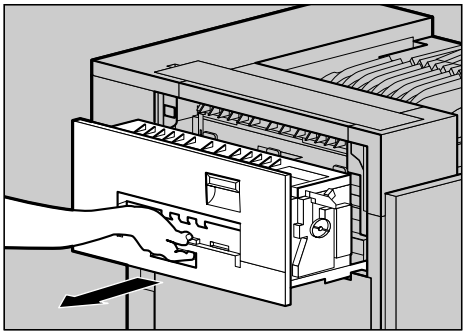

ZDJH047J

6 Open the upper left cover.

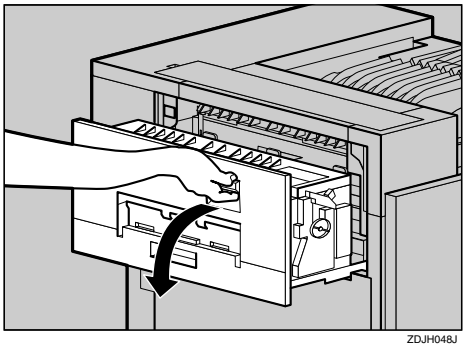

ZDJH048J

Important

❒ Do not touch any areas other than the handle.

7 Holding the green handle, pull up the Fusing Unit slowly in the direction of the arrow, and then put it in a stable and level place.

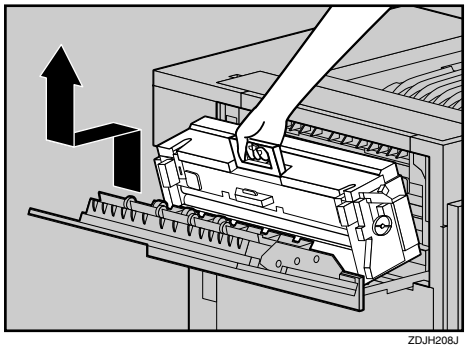

ZDJH208J

8 Take out the new Fusing Unit from the bag and put it in a stable and level place.

Important

- ❒ The A3 paper which comes with the new Fusing Unit will be used in a later step 20, so be careful not to lose it.
- ❒ Do not turn the blue dial at the side of the new fusing unit when replacing it or before turning on the power switch.

9 Remove the Fuser Oil Unit in the direction of the arrow.

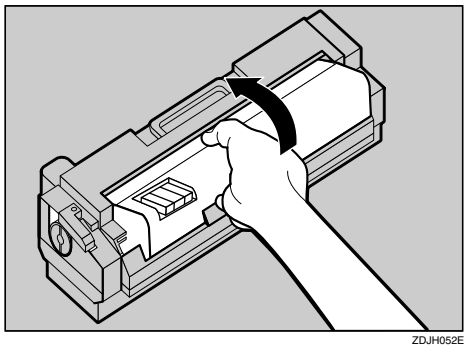

ZDJH052E

Important

- ❒ Do not touch inside of the Fusing Unit.
- ❒ Be careful not to touch the oil.

10 Match (▲) on the front of the Fuser Oil Unit and the arrow on the Fusing Unit as shown in the illustration.

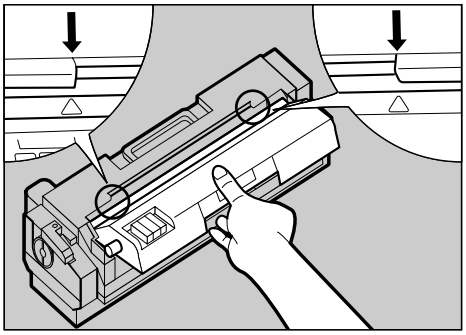

ZDJH055J

Important

- ❒ Be careful not to get oil on the metal point of the left side of the Fuser Oil Unit.

11 Insert the left and right protrusions of the Fuser Oil Unit into the white holders of the Fusing Unit (①), and then move the Fuser Oil Unit in the direction shown by the arrow (②) to attach the Fuser Oil Unit to the Fusing Unit.

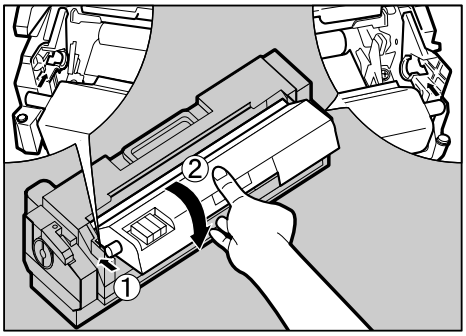

ZDJH054J

12 Put the removed Fuser Oil Unit in the bag that enclosed the new Fusing Unit, and then seal it.

13 Holding the green handle of the new Fusing Unit, use your other hand to push the area right in front of the handle to create a slight slant, and then push the Fusing Unit slowly to the back.

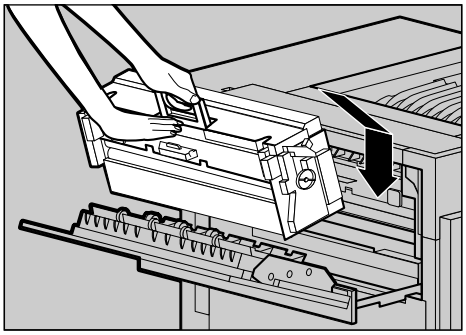

ZDJH050E

Important

- ❒ Confirm that the Fuser Oil Unit is facing the inside of the printer.
- ❒ Confirm that the Fusing Unit is properly positioned in the machine.

14 Close the upper left cover (①) and push the handle (②) slowly to the back until it clicks into place.

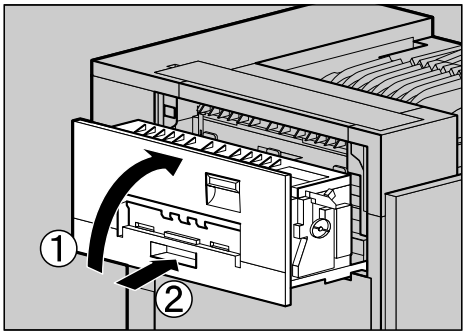

ZDJH051J

15 If you removed the External Tray in step 4, reattach it to the printer. Insert the hooks of the External Tray into the printer slits, and lower it toward you.

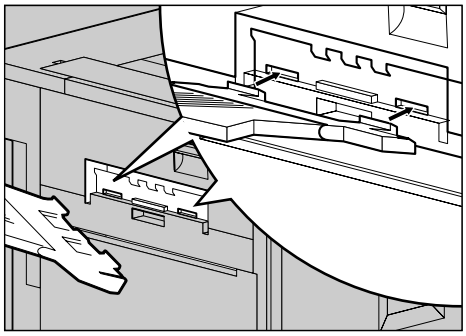

ZDJH010J

16 If the Duplex Unit is installed, close the Duplex Reversal Unit.

Reference

See p.2 "Opening and Closing the Duplex Reversal Unit"

17 If the 2 Tray Finisher was installed, reattach the 2 Tray Finisher to the printer.

Reference

See p.1 "Detaching the SR770 (2 Tray Finisher)"

18 Plug in the power cable and turn on the power switch.

The following message appears on the panel display. Please wait for a while.

```
Please Wait
```

The following message appears on the panel display, and the printer starts color registration adjustment automatically. Please wait for a while.

```
Calibrating...
```

After finishing adjustment, the following message appears.

```
Initializing...
Please Wait
```

19 Confirm that the following message is displayed on the panel display, and then press 【Enter】.

```
Press # for
Fuser Adjust
```

20 Confirm that the following message is displayed on the panel display, and then load the A3 paper which comes with the Fusing Unit in the Bypass Tray.

```
Set Sheet in
Bypass, then #
```

❶ Open the Bypass Tray.

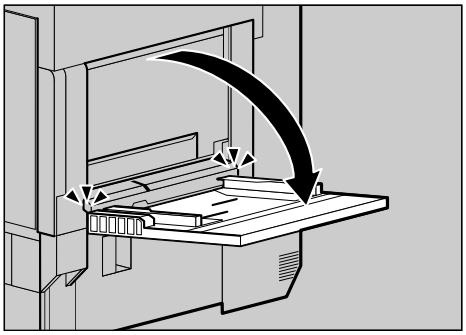

ZDJH202J

❷ Pull out the Bypass Tray Extension, and then flip it open.

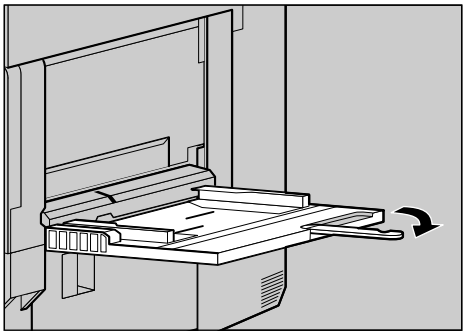

ZDJH203J

❸ Slide the side guides outward (①), and then load paper until it stops (②).

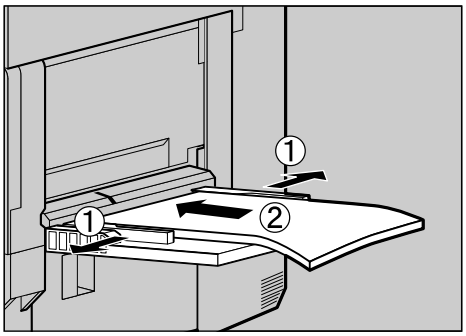

ZDJH204J

❹ Adjust the side guides to the paper width.

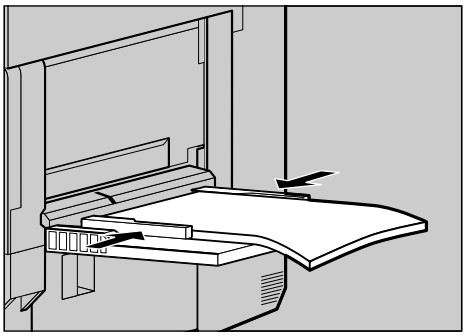

ZDJH205J

Important

- ❒ Be sure to shuffle the paper before loading the stack onto the tray so multiple sheets are not fed in at one time.

1

21 Confirm that the A3 paper which comes with the Fusing Unit is in the Bypass Tray, and then press 【Enter】.

The printer prints 8 Test Sheet (A - H). For details about Test Sheet, see p.40 “Test Sheet Samples”.

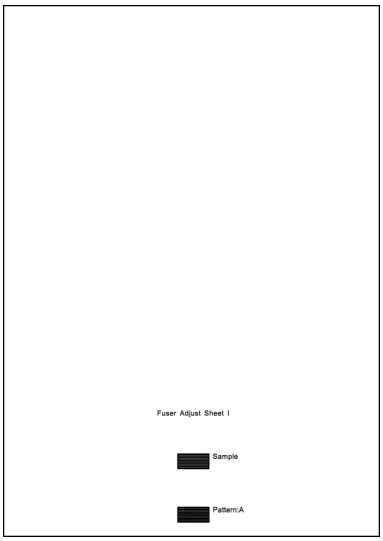

Note

❒ It takes about a minute to start printing.

22 Check the test sheets and select the correction value for A through H.

- **Select "1", if black and magenta square overlap sharply and you can see white slits as the sample.**
- **Select "0", if black and magenta square do not overlap sharply and you can not see white slits clearly.**

```
A B C D E F G H
0 0 0 0 0 0 0 0
```

Press 【▲】 or 【▼】 to select "0" or "1" as the values for A - H. Press 【Enter】 to move to the next letter. After setting the value for "H", press 【Enter】, and the printer returns to the ready condition.

```
Ready
```

Important

❒ If you select "0" for each alphabets or an invalid value is selected, an error message is displayed. In this case, press 【Enter】 to return to the ready condition, and perform the "Fuser Adjust" manually. See p.35 “When replacing the fusing unit”.

```
Invalid Value
Press #
```

❒ When "Toner is Almost Empty" appears on the panel display, replace the toner cartridge and perform the "Auto Adjust", and then perform "Fuser Adjust" manually.

Reference

⇒ p.3 “Replacing the Toner Cartridge”

⇒ p.34 “Auto Adjust”

⇒ p.35 “When replacing the fusing unit”for "Fuser Adjust"

Replacing the Dustproof Filter

The dustproof filter is attached to the black Development Unit. When replacing the black Development Unit, also replace the dustproof filter.

The dustproof filter is attached to the left side of the printer shown in the illustration.

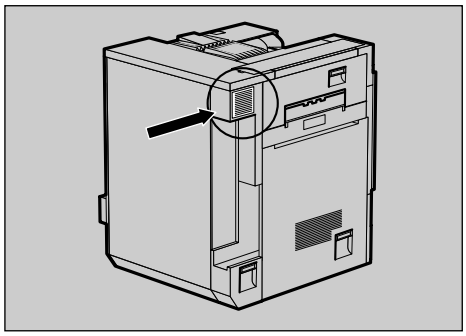

ZDJH801J

1 Turn off the power switch and unplug the power cable.

2 Push in the grips on both sides of the dustproof filter cover to pull it off.

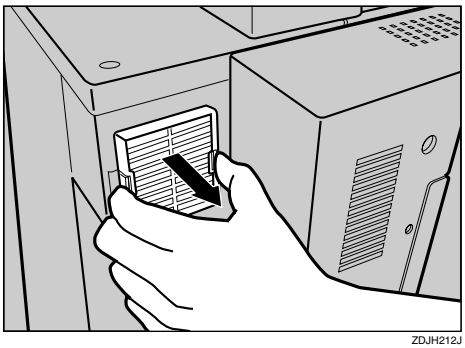

ZDJH212J

Note

❒ Be sure to put the removed dustproof filter cover in a stable and level place.

3 From the box which contained the black Development Unit, take out the new dustproof filter and glove.

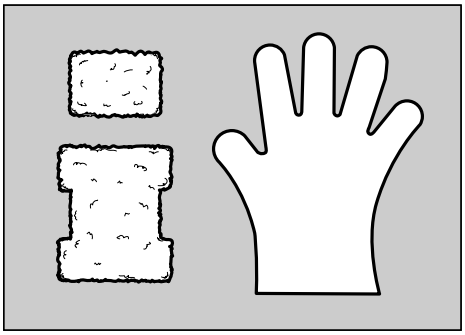

ZDJH214J

4 Wear the glove on either hand.

5 **With the hand wearing the glove, take out the dustproof filter that is attached to the dustproof filter cover slowly, one by one, and put them into the box which contained the black Development Unit.**

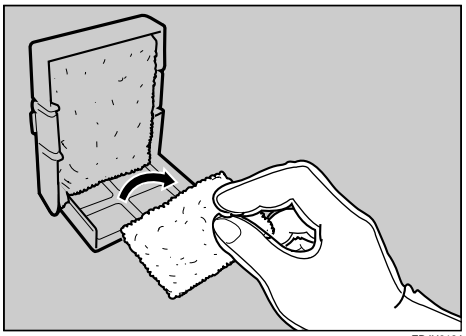

ZDJH213J

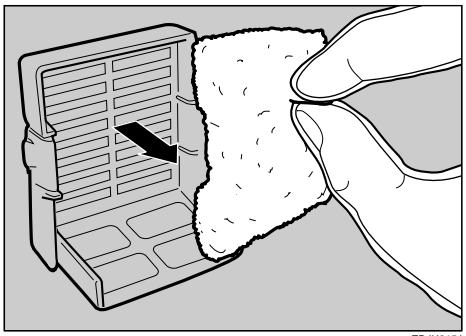

ZDJH215J

Important

- ❒ Handle the removed dustproof filters with care. If you shake them, the attached dust might scatter.
- ❒ Be sure to remove the gloves to attach the new dustproof filter.

6 **Attach the new dustproof filters to the dustproof filter cover one by one.**

❶ **Attach the large filter.**

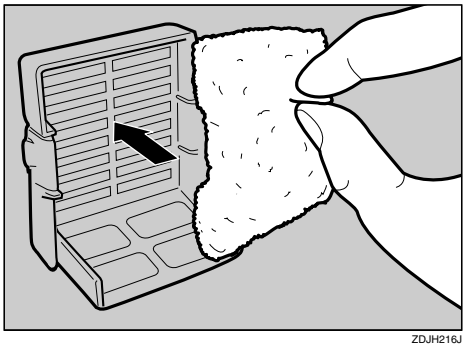

ZDJH216J

❷ **Attach the small filter.**

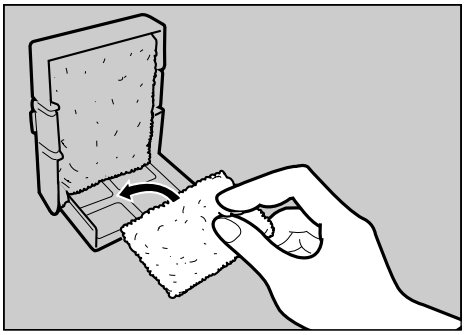

ZDJH217J

7 **Insert the dustproof filter cover into the upper left area of the printer.**

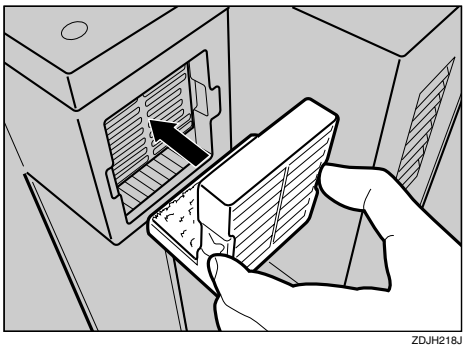

ZDJH218J

8 **Plug in the power cable and turn on the power switch.**

Replacing the Waste Toner Bottle

If "Replace Waste Toner (Type E)" appears on the panel display, replace the waste toner bottle.

```
Replace Waste
Toner (Type E)
```

1 Turn off the power switch and unplug the power cable.

2 Open the front cover slowly by pulling down from the two areas on the left and right.

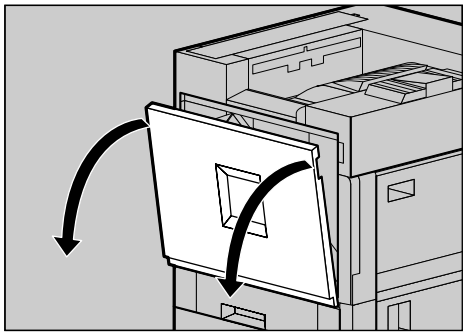

ZDJH007J

3 Take out a new waste toner bottle from the bag.

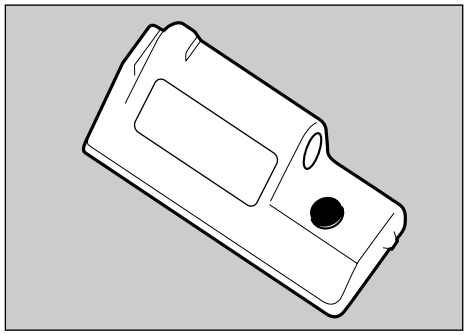

ZDJH228J

4 Remove the used waste toner bottle slowly from inside the printer.

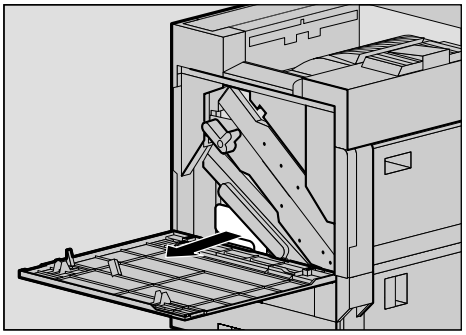

ZDJH802J

Important

- ❒ Be sure to remove the waste toner bottle in a level manner.

5 Remove the lid (①), and then put it on the position shown in the illustration (②).

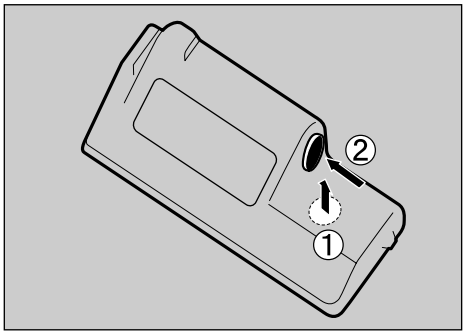

ZDJH229J

6 Put the used waste toner bottle into the bag that contained the new waste toner bottle, and then seal the bag.

Important

- ❒ Be sure to handle the bottle carefully so the waste toner does not spill.

7 **Insert the new waste toner bottle in the position shown in the illustration.**

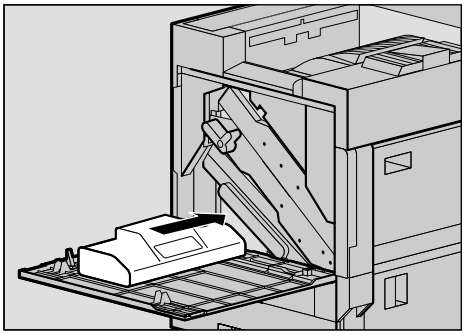

ZDJH230J

8 **Push it in until it stops.**

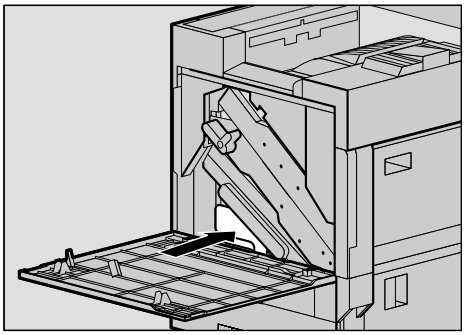

ZDJH231J

Important

- ❒ Be sure to insert the waste toner bottle firmly to avoid the toner from leaking inside the printer.

9 **Close the front cover slowly by pushing the two areas on the left and right.**

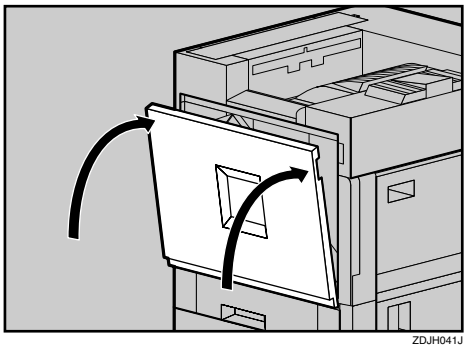

ZDJH041J

10 **Plug in the power cable and turn on the power switch.**

Replacing the Paper Feed Rollers

Note

❒ The following illustrations are the an examples of replacing the paper feed rollers of Tray 1. The same procedure is followed with the other trays.

1 **Check the contents of the box.**

❖ **Paper Feed Roller A**

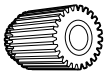

❖ **Paper Feed Roller B**

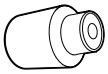

❖ **Paper Feed Roller C**

❖ **Two Stoppers**

2 **Turn off the power switch and unplug the power cable and interface cable.**

Important

❒ If you replace the paper feed rollers of the optional 2000-sheet Large Capacity Tray, remove all paper from the tray.

3 **Pull out all trays slowly while lifting it up a little.**

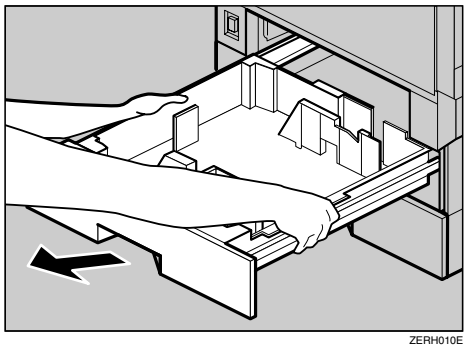

ZERH010E

Note

❒ If you replace the paper feed rollers of the optional Paper Feed Unit, or 2000-sheet Large Capacity Tray, pull out all the paper trays from each unit.

4 **Confirm the position of the paper feed rollers.**

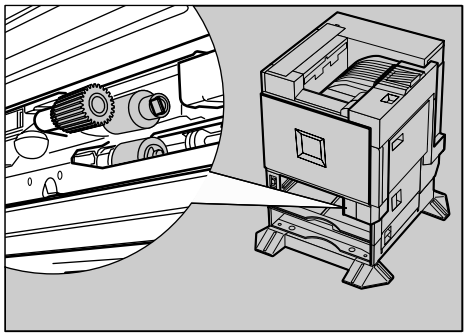

ZERH020E

Confirm the positions and names of each roller.

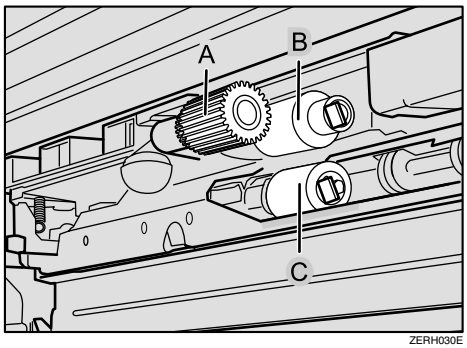

ZERH030E

5 **While pushing the pin of the paper feed roller A outwards (①), remove the paper feed roller (②).**

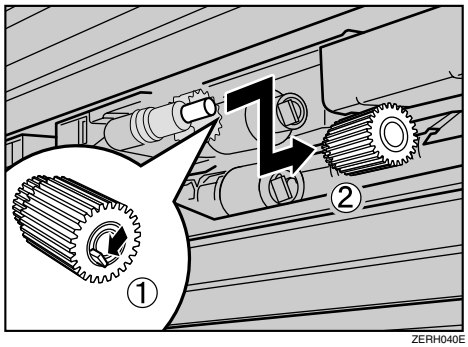

ZERH040E

6 **Remove the stopper from the paper feed roller B (①), and remove the paper feed roller (②).**

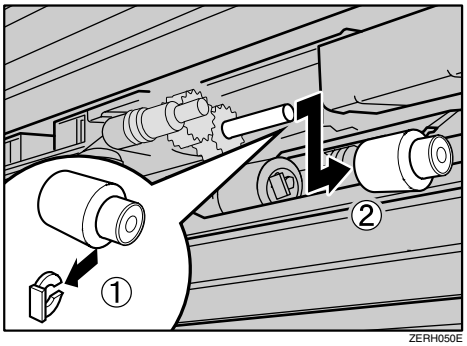

ZERH050E

7 **Remove the stopper from the paper feed roller C (①), and remove the paper feed roller (②).**

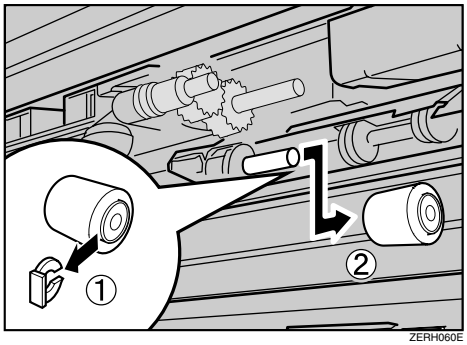

ZERH060E

8 **Hold the new paper feed roller C with its gear towards the shaft. Insert it into the rear shaft so that the roller gear is meshed with the shaft gear (①). Lock the roller with the stopper (②).**

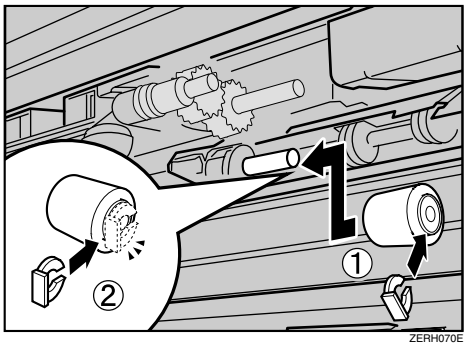

ZERH070E

9 **Hold the new paper feed roller B with its gear towards the shaft. Insert it into the rear shaft so that the roller gear is meshed with the shaft gear (①). Lock the roller with the stopper (②).**

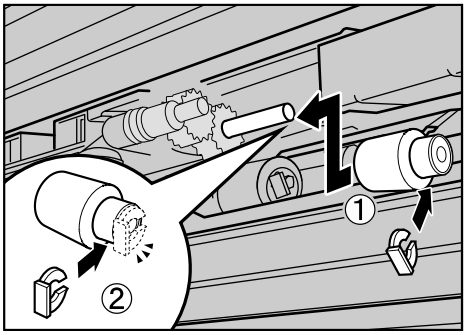

ZERH080E

10 Hold the new paper feed roller A with its pin towards you (①). Insert the roller onto the front shaft until it clicks into place (②).

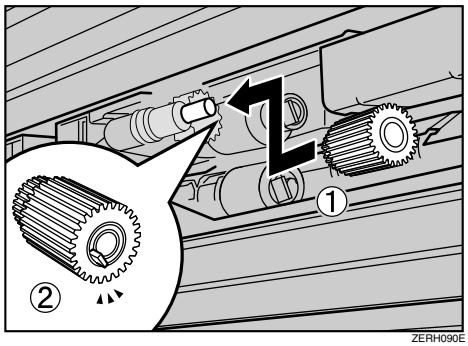

ZERH090E

11 Slide all trays back into the printer slowly until it stops.

Note

❒ If you replaced the paper feed rollers of the optional 2000-sheet Large Capacity Tray, load stocks that you removed at step 2 in the tray.

2. Clearing and Adjusting the Printer

Cautions to Take When Cleaning

⚠ ***WARNING:***

- ***Do not remove any covers or screws other than those specified in this manual. Some parts of the machine are at a high voltage and could give you an electric shock. Also, if the machine has laser systems, direct (or indirect) reflected eye contact with the laser beam may cause serious eye damage. When the machine needs to be checked, adjusted, or repaired, contact your service representative.***
- ***Do not take apart or attempt any modifications to this machine. There is a risk of fire, electric shock, explosion or loss of sight. If the machine has laser systems, there is a risk of serious eye damage.***

⚠ ***CAUTION:***

- *When removing misfed paper, do not touch the fusing section because it could be very hot.*

Clean the printer periodically to maintain fine printing.

Dry wipe the exterior with a soft cloth. If dry wiping is not enough, wipe with a soft, wet cloth that is wrung out well. If you still cannot remove the stain or grime, use a neutral detergent, then wipe over with a well-wrung wet cloth, dry wipe, and let it dry.

Important

❒ To avoid deformation, discoloration, or cracking, do not use volatile chemicals, such as benzine and thinner, or spray insecticide on the printer.

❒ If there is dust or grime inside the printer, wipe with a clean, dry cloth.

Cleaning the Registration Roller

⚠ ***CAUTION:***

- *The inside of the printer becomes very hot. Do not touch the parts with a label indicating the "hot surface", otherwise it could cause a burn.*

Clean the roller when replacing the black Development Unit.

1 Turn off the power switch and unplug the power cable.

2 Open the right cover shown in the illustration.

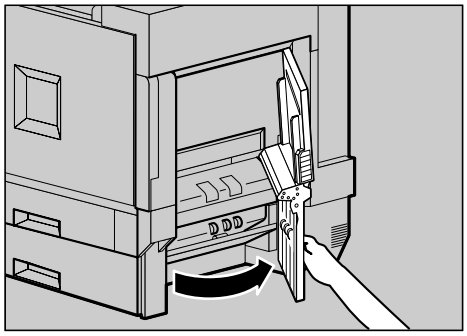

ZDJH206J

The registration roller is set shown in the illustration.

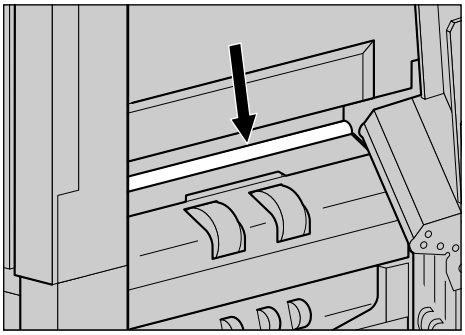

ZDJH703J

3 Wipe around the registration roller by turning with a soft damp cloth.

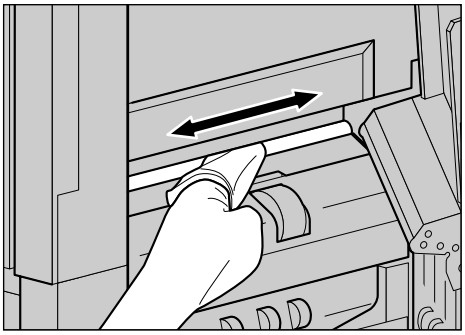

ZDJH704J

Important

❒ Do not use chemical cleaner or organic solvent such as thinner or benzene.

4 Close the right cover by pushing the area labeled "PUSH".

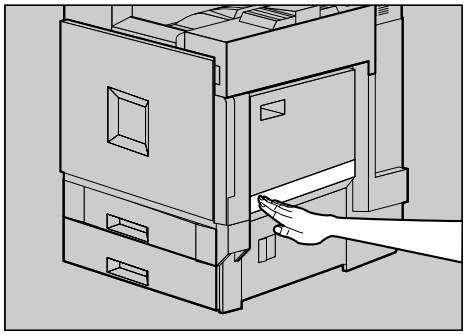

ZDJP708J

5 Plug in the power cable and turn on the power switch.

Cleaning the DustProof Glass

The dustproof glass may require cleaning if white lines appear on the print side of the document.

1 Turn off the power switch and unplug the power cable.

2 Open the front cover and remove the cleaning brush.

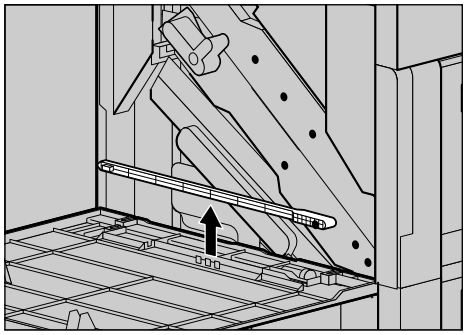

ZDJP705J

There are four holes for cleaning the dustproof glass.

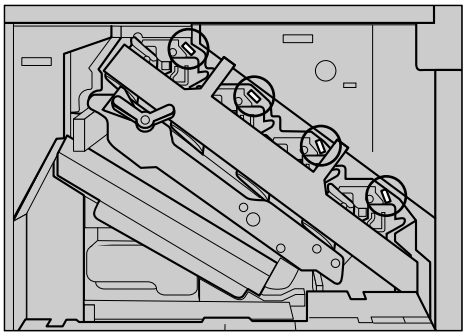

ZDJP706J

3 Slide the cleaning brush in and out slowly 8 to 10 times to clean all four areas.

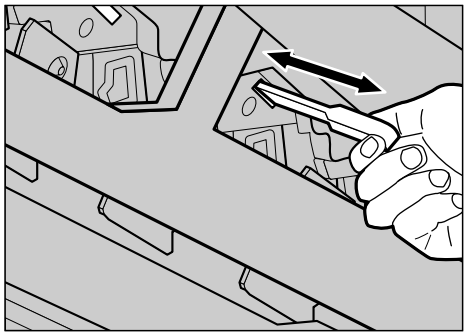

ZDJP707J

Important

- ❒ Do not insert the brush roughly, or the printer might be damaged.

4 Return the cleaning brush to its original position.

5 Plug in the power cable and turn on the power switch.

Adjusting the Color Registration

When the printer is moved, when the Fusing Unit is replaced, or after printing repeatedly for some time, registration shifting might occur. By performing color registration adjustment, you can maintain optimum print results.

Note

- ❒ Normally, do not perform manual color adjustment.

Auto Adjust

If the color documents show registration shifting, perform automatic color adjustment.

1 Press [Menu].

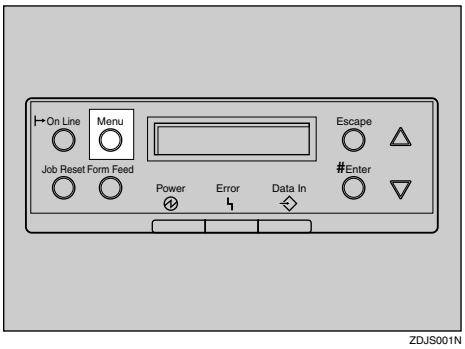

"Menu" appears on the panel display.

2 Press [▲] or [▼] to display "Maintenance", and then press [Enter].

```
Menu:
 Maintenance
```

The maintenance menu is displayed.

3 Press [▲] or [▼] to display "Color Regist.", and then press [Enter].

```
Maintenance:
 Color Regist.
```

4 Confirm that "Auto Adjust" is displayed, and then press [Enter].

```
Color Regist.:
Auto Adjust
```

5 Confirm that "Now" is displayed, and then press [Enter].

```
Auto Adjust:
Now
```

The check message is displayed.

```
Press #
To Adjust
```

6 Press [Enter].

Automatic color adjustment begins, and the following message is displayed.

```
Adjusting...
```

Important

- ❒ Do not turn off the power switch during "Adjusting..." appears on the panel display to avoid printer malfunction.

Automatic color adjustment takes about two minutes. When it completes, a check message is displayed.

```
Completed
```

Press [Enter] to return to the color adjustment menu.

```
Color Regist.:
Auto Adjust
```

7 **When you have made all the settings, press [On Line].**

"Ready " appears on the panel display.

```
Ready
```

Fuser Adjust

When replacing the fusing unit

Note

❒ When "Toner is Almost Empty" appears on the panel display, replace the toner cartridge and perform "Auto Adjust", and then perform the "Fuser Adjust".

Reference

⇒ p.3 “Replacing the Toner Cartridge”

⇒ p.34 “Auto Adjust”

1 **Press [Menu].**

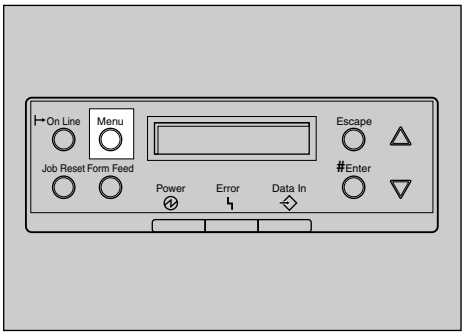

ZDJS001N

"Menu" appears on the panel display.

2 **Press [▲] or [▼] to display "Maintenance", and then press [Enter].**

```
Menu:
 Maintenance
```

The maintenance menu is displayed.

3 **Press [▲] or [▼] to display "Color Regist.", and then press [Enter].**

```
Maintenance:
 Color Regist.
```

4 **Press [▲] or [▼] to display "Fuser Adjust", and then press [Enter].**

```
Color Regist.:
Fuser Adjust
```

Important

❒ When the toner cartridge is almost empty or "Auto Adjust” is not finished, the following message appears on the panel display and Fuser Adjust is not available.

```
Cannot Adjust
See User's Guide
```

Confirm that the toner cartridge is installed. The toner cartridge must be installed. See p.3 “Replacing the Toner Cartridge”.

If the toner cartridge is installed, perform "Auto Adjust". See p.34 “Auto Adjust”.

5 **Press [▲] or [▼] to display "At Unit Replace", and then press [Enter].**

```
Fuser Adjust:
At Unit Replace
```

2

6 Confirm that "Print" is displayed on the menu for printing the test sheet, and then press [Enter].

```
Test Sheet:
Print
```

The following message appears on the panel display.

```
Set Sheet in
Bypass, then #
```

7 Confirm that the A3 paper which comes with the Fusing Unit is in the Bypass Tray, and then press [Enter].

The printer prints 8 Test Sheet (A - H). For details about Test Sheet, see p.40 "Test Sheet Samples"

8 Check the test sheets and select the correction value for A through H.

- **Select "1", if black and magenta square overlap sharply and you can see white slits as the sample.**
- **Select "0", if black and magenta square do not overlap sharply and you can not see white slits clearly.**

```
A B C D E F G H
0 0 0 0 0 0 0 0
```

Press [▲] or [▼] to select "0" or "1" as the values for A - H. Press [Enter] to move to the next letter. After setting the value for "H", press [Enter] and the printer returns to "At Unit Replace".

Note

❒ If you select "0" for each alphabets or an invalid value is selected, an error message is displayed and the printer returns to "At Unit Replace". In this case, try again from step 5.

```
Invalid Value
Cannot Adjust
```

9 Press [On Line].

"Ready " appears on the panel display.

```
Ready
```

When color shifting occurs

Perform this procedure when color shifting occurs even after performing "Auto Adjust".

1 Load A4▭ or larger paper in the Bypass Tray.

Note

❒ Be sure to select paper size in the "Paper Input" menu.

Reference

For details about paper size and the procedure for loading paper in the Bypass Tray, see "*Loading Paper*" in Maintenance Guide 2.

2 Press [Menu].

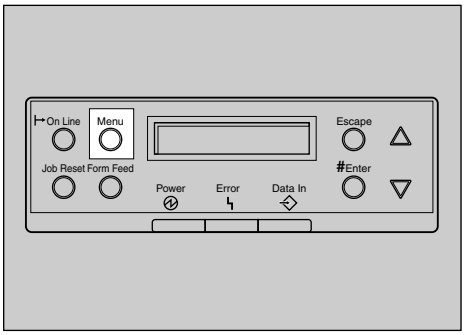

ZDJS001N

"Menu" appears on the panel display.

3 Press [▲] or [▼] to display "Maintenance", and then press [Enter].

```
Menu:
 Maintenance
```

The maintenance menu is displayed.

4 Press [▲] or [▼] to display "Color Regist.", and then press [Enter].

```
Maintenance:
 Color Regist.
```

5 Press [▲] or [▼] to display "Fuser Adjust", and then press [Enter].

```
Color Regist.:
Fuser Adjust
```

Important

- ❒ When the toner cartridge is almost empty, or Auto Adjust is not finished, the following message appears on the panel display and "Fuser Adjust" is not available.

```
Cannot Adjust
See User's Guide
```

Confirm that the toner cartridge is installed. The toner cartridge must be installed. See p.3 “Replacing the Toner Cartridge”.

If the toner cartridge is installed, perform "Auto Adjust". See p.34 “Auto Adjust”.

6 Press [▲] or [▼] to display "Custom Adjust", and then press [Enter].

The following message appears on the panel display.

```
Fuser Adjust:
Custom Adjust
```

7 Press [▲] or [▼] to display the paper types and resolution in which color shifting occurs, and then press [Enter].

```
Custom Adjust:
Plain: 600dpi
```

Select a value from "Plain: 600dpi", "Plain: 1200dpi" and "Thick: 600dpi".

Note

- ❒ The current resolution is displayed on the printer driver properties.
- ❒ To adjust the color registration on thick paper, select "Thick: 600dpi" regardless of the current resolution.

2

8 Confirm that the following message is displayed, and then press 【Enter】.

```
Press # for Test
Print (Bypass)
```

The following message appears on the panel display. The size of the paper loaded in step 1 is shown.

```
Set Sheet, then#
A3 (297 X 420)
```

9 Confirm that A4▭ or larger paper is in the Bypass Tray, and then press 【Enter】.

The Test Sheet is printed. See p.40 "Test Sheet Samples"

10 Press 【▲】 or 【▼】 to make the offset settings, and then press 【Enter】.

When such a clear (not smeared in red) square as the sample is:

- at its center position, select "0".
- shifted to the left, select "-1".
- shifted to the right, select "+1".

```
Select Action:
0: Exit
```

```
Select Action:
-1: Re-adjust
```

```
Select Action:
+1: Re-adjust
```

If you select "0: Exit", the printer returns to the previous menu.

If you select "-1" or "+1", the printer returns to step 8. Keep adjusting until "0" is available.

11 Press 【On Line】.

"Ready " appears on the panel display.

```
Ready
```

Manual Adjust

Important

❒ Normally, do not perform manual color adjustment.

1 Press 【Menu】.

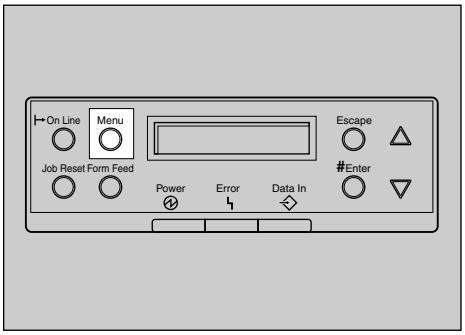

ZDJS001N

"Menu" appears on the panel display.

2 Press 【▲】 or 【▼】 to display "Maintenance", and then press 【Enter】.

```
Menu:
 Maintenance
```

The maintenance menu is displayed.

3 Press 【▲】 or 【▼】 to display "Color Regist.", and then press 【Enter】.

```
Maintenance:
 Color Regist.
```

4 Press 【▲】 or 【▼】 to display "Manual Adjust", and then press 【Enter】.

```
Color Regist.:
Manual Adjust
```

5 Confirm that "Print" is displayed in the menu for printing the Test Sheet, and then press 【Enter】.

```
Test Sheet:
Print
```

The Test Sheet is printed. See p.40 "Test Sheet Samples".

6 Enter the corrective values for A through L on the Test Sheet in order.

```
Adjustment A:
(-7.0 +7.0)   +0
```

Note

❒ Confirm the printed Test Sheet to enter the correction values.

❶ **Use 【▲】 or 【▼】 to enter the value (-7.0 to +7.0) shown next to the whitest square, into box A of the Test Sheet.**

```
Adjustment A:
(-7.0 +7.0)   +2
```

Note

❒ Pressing 【▲】 or 【▼】 increases or decreases the value in 0.5 units.

❒ Sometimes, there are two of the whitest squares next to each other. For example, if the two squares of "+1" and "+2" are the whitest, enter "+1.5".

❒ You can adjust the color alignment for each color in the range of "-7.0 to +7.0".

❒ There is an area on the Test Sheet for you to put down the values of "A" through "L".

❷ **Press 【Enter】.**

❸ **Make the settings for "B" to "L" in the same manner, using steps ❶ and ❷.**

❹ **When you finish the settings up to "L", press 【Enter】 in the next menu.**

```
Manual Adjust:
Print Result
```

The Test Sheet is printed. See p.40 "Test Sheet Samples".

```
Printing...
```

❺ **Confirm that square "0" is the whitest within A through L on the printed Test Sheet.**

Note

❒ If a square other than "0" is the whitest, redo the procedure from step **4**.

The display is returned to the manual adjustment menu.

```
Color Regist.:
Manual Adjust
```

7 When you have made all the settings, press 【On Line】.

"Ready " appears on the panel display.

```
Ready
```

Test Sheet Samples

Following images are samples for the test sheet.

❖ ColorRegistSheet

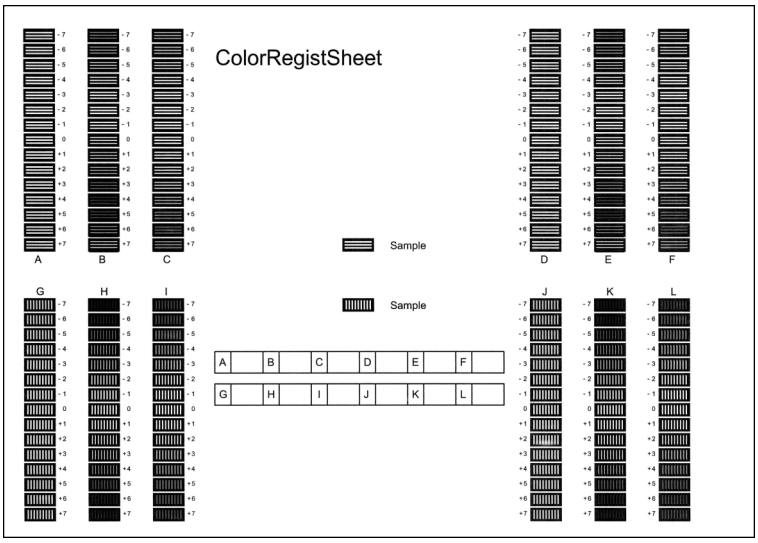

❖ Fuser Adjust Sheet I

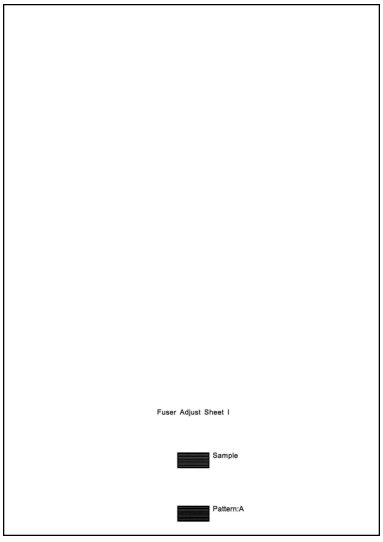

❖ Fuser Adjust Sheet II

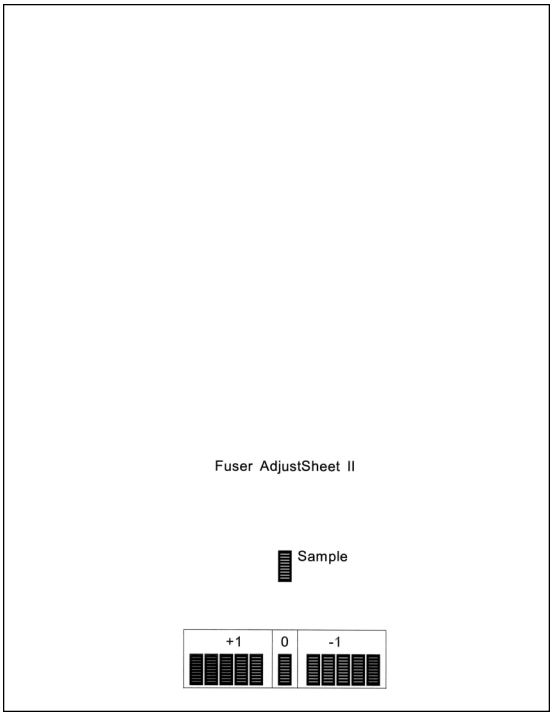

Adjusting the Image Density

Adjust the image density when the print side of the page is a hazy gray or the print image looks patchy.

Important

- ❒ Extreme settings may create output that appears dirty.
- ❒ Image density settings should be made from the application or the printer driver whenever possible.

Note

- ❒ Changing the image density setting might cause a deterioration of color balance. We recommend that you leave the image density at its factory default setting.

1 **Press [Menu].**

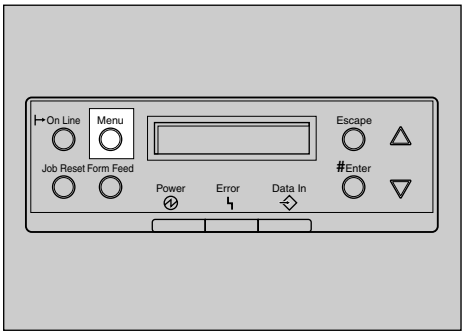

"Menu" appears on the panel display.

2 **Press [▲] or [▼] to display "Maintenance", and then press [Enter].**

```
Menu:
 Maintenance
```

3 **Press [▲] or [▼] to display "Image Density", and then press [Enter].**

```
Maintenance:
 Image Density
```

4 **Press [▲] or [▼] to select the color you want to adjust, and then press [Enter].**

```
Image Density:
 Black
```

5 **Press [▲] or [▼] to set the image density value, and then press [Enter].**

```
Black:
(-3 +3)          0
```

Note

- ❒ You can adjust the image density in seven steps from -3 to +3. Increasing the value makes the printouts darker and decreasing the value makes the printouts lighter.

To adjust another color, repeat step **4** and **5**.

6 **Press [On Line].**

"Ready " appears on the panel display.

```
Ready
```

Adjusting the Registration of the Trays

You can adjust the registration of each tray. The vertical adjustment is used for all trays. Normally, you need not update the registration. But when the optional Paper Feed Unit or the Duplex Unit is installed, updating the registration is useful in some cases. The following procedure describes how to adjust Tray 3. You can use the same procedure to adjust the other tray as well.

1 Press 【Menu】.

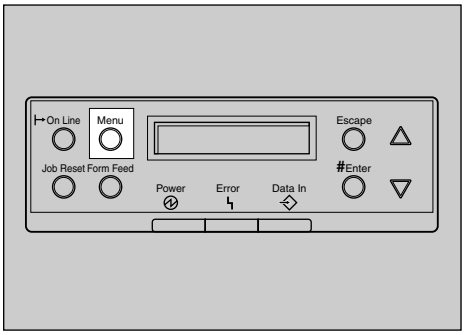

ZDJS001N

"Menu" appears on the panel display.

2 Press 【▲】 or 【▼】 to display "Maintenance", and then press 【Enter】.

```
Menu:
 Maintenance
```

3 Press 【▲】 or 【▼】 to display "Registration", and then press 【Enter】.

```
Maintenance:
 Registration
```

4 Print the test sheet to preview the settings.

❶ **Confirm that "Test Sheet" is displayed, and then press 【Enter】.**

```
Registration:
 Prt. Test Sheet
```

❷ **Press 【▲】 or 【▼】 to display the tray to adjust, then press 【Enter】.**

```
Prt. Test Sheet:
 Tray 3
```

5 Confirm the position of the image to test sheet, and then adjust the registration value.

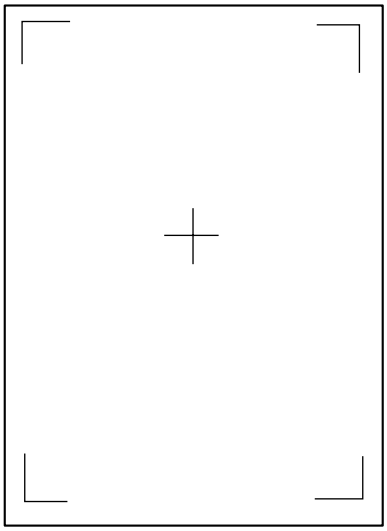

The following are examples for adjusting the margin on the test sheet.

❶ **Press 【Escape】.**

2

❷ **Press 【▲】 or 【▼】 to display the "Adjustment", and then press 【Enter】.**

```
Registration:
 Adjustment
```

❸ **Press 【▲】 or 【▼】 to display the tray to adjust, and then press 【Enter】.**

```
Adjustment:
 Vert.: Tray 3
```

❹ **Press 【▲】 or 【▼】 to set the digit of the registration value (mm).**

```
Vert.: Tray 3:
(-5.0 +5.0) 0
```

Note

❒ Increase the value to shift the print area in a positive direction, and decrease to shift in a negative direction.

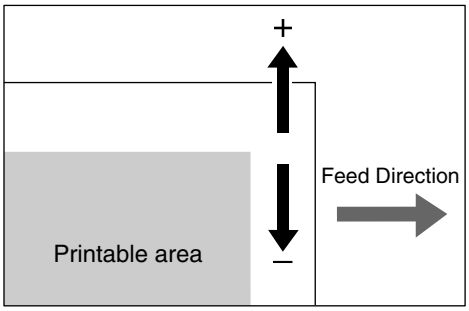

ZDJX900J

❒ Pressing 【▲】 or 【▼】 makes the value increase or decrease by 1.0 mm step.

❺ **Press 【Enter】.**

❻ **Press 【Escape】.**

The current setting is displayed for 2 seconds, and then the printer returns to the previous menu.

6 **Print the test sheet to check the settings you have made.**

7 **Press 【On Line】.**

"Ready " appears on the panel display.

```
Ready
```

Removing Misfed Paper in the Duplex Feed Unit

You can remove misfed paper from the Duplex Feed Unit following the procedure below.

Note

- ❒ When a paper misfeed occurs in the Duplex Feed Unit, the printer usually sends the misfed paper to the right cover and there is no need to execute following procedure. See *"When "Remove Misfeed A:Internal Path" Appears"* in Maintenance Guide 2.

Important

- ❒ Be sure to remove a misfed paper following the procedure below, only when "Remove Misfeed Z2:Dup. Feed Unit" appears on the panel display.

1 Turn off the power switch and unplug the power cable.

2 Open the front cover slowly by pulling down from the two areas on the left and right.

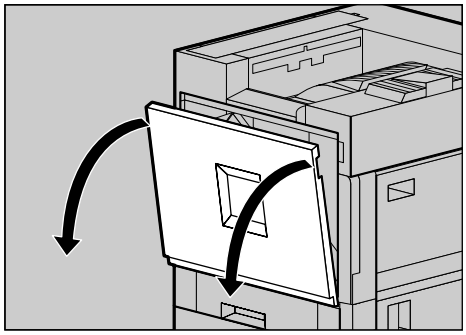

ZDJH007J

3 Take out the green screwdriver.

Use this screwdriver for all attachment and detachment of screws.

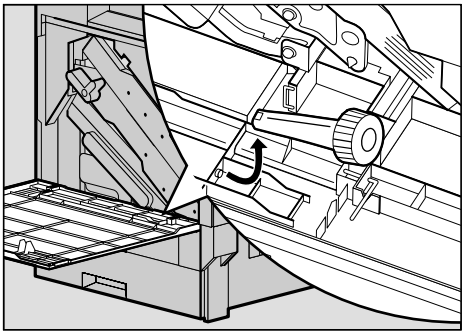

ZDJH013J

4 Remove the screw that is fastening the Duplex Feed Unit using provided screwdriver.

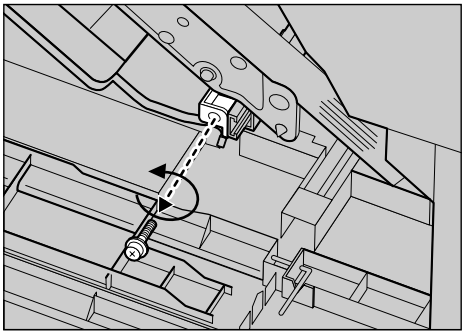

ZDJP221J

You will use this screw to refasten the Duplex Feed Unit later.

5 **Pinch the upper left area of the Duplex Feed Unit, and pull it out slowly halfway.**

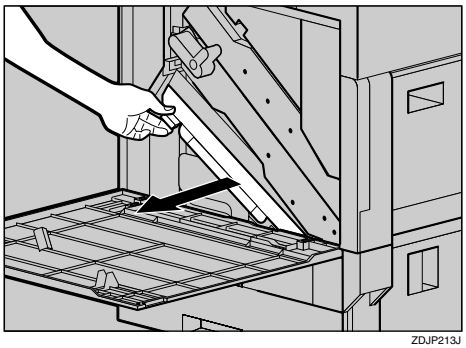

ZDJP213J

6 **Holding the Duplex Feed Unit firmly with both hands, pull it straight out.**

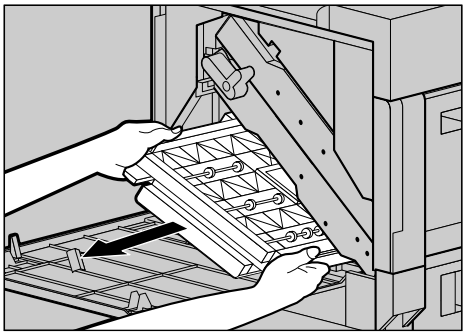

ZDJP214J

7 **Place the Duplex Feed Unit on the floor slowly. Open it slowly, and remove the misfed paper.**

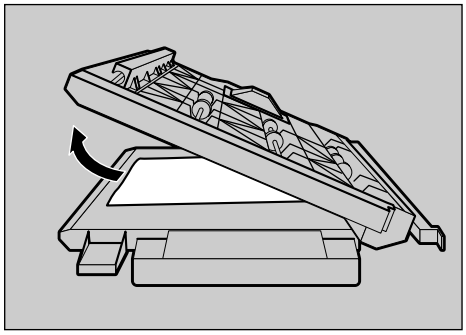

ZDJP215J

Important

❒ Do not open the Duplex Feed Unit by force. It might damage the unit.

8 **Close the Duplex Feed Unit.**

9 **Holding the Duplex Feed Unit with both hands, insert it along the rails slowly until it stops.**

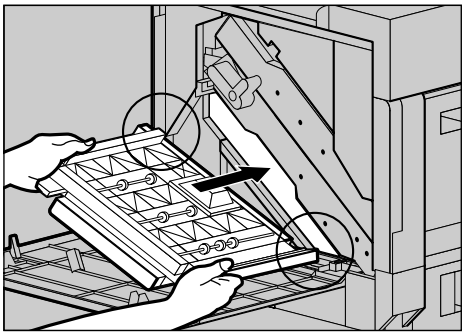

ZDJP056J

The top and bottom rails are located in the position shown in the illustration.

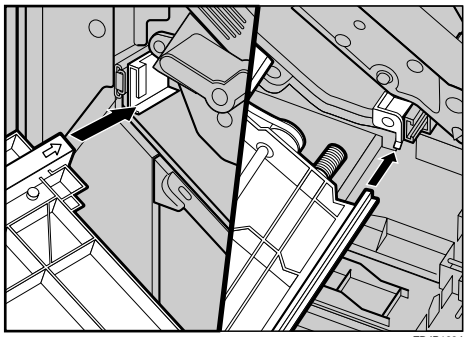

ZDJP133J

There are two arrows located on the left and right sides of the Duplex Feed Unit.

10 Refasten the Duplex Feed Unit using provided screwdriver. Use the screw that was removed in step 4.

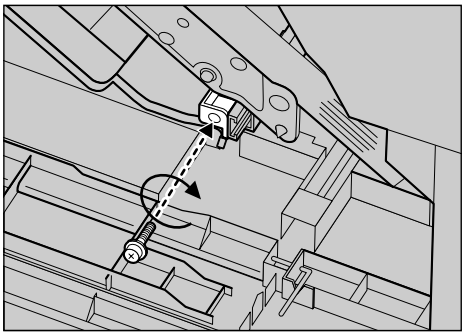

ZDJP057J

Note

❒ Be sure to return the provided screwdriver to its original position on the inside of the front cover.

11 Close the front cover slowly by pushing the two areas on the left and right.

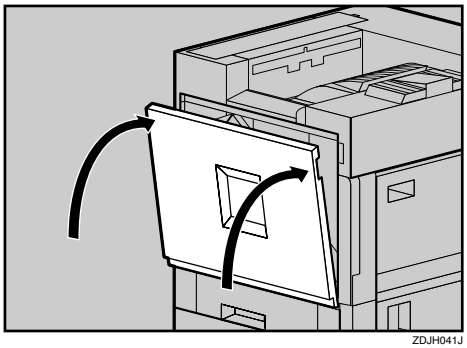

ZDJH041J

12 Plug in the power cable and turn on the power switch.

When the Front Cover Does Not Close

When "Close Front Cover" appears on the panel display, even if the cover seems to be closed properly, it is not.

```
Close
Front Cover
```


When the front cover does not close, confirm that the Transfer Unit is attached firmly.

The Transfer Unit is attached to the position shown in the illustration.

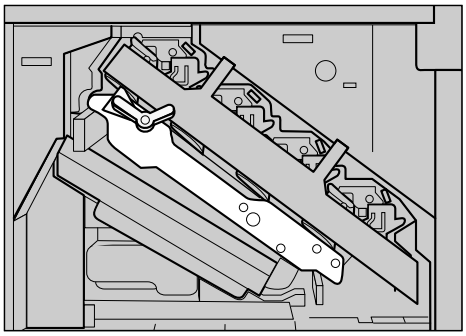

ZDJH995J

1 Turn off the power switch and unplug the power cable.

2 If the light brown lever is in the position shown in the illustration, turn it counterclockwise.

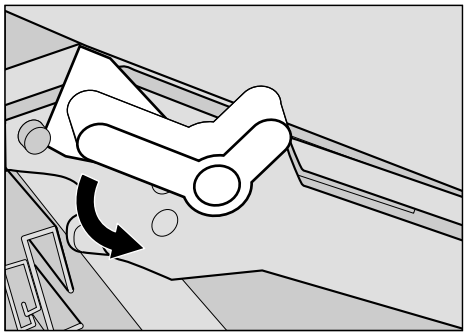

ZDJH014E

3 Push in the Transfer Unit until it stops.

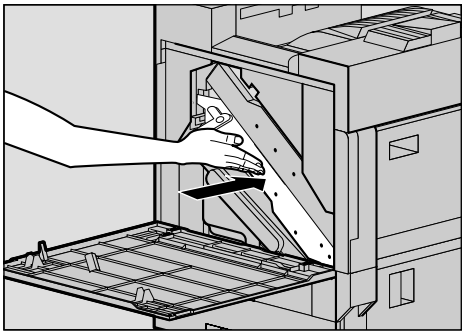

ZDJH999J

Confirm that the protrusion inside the printer is in the upper left hole of the Transfer Unit.

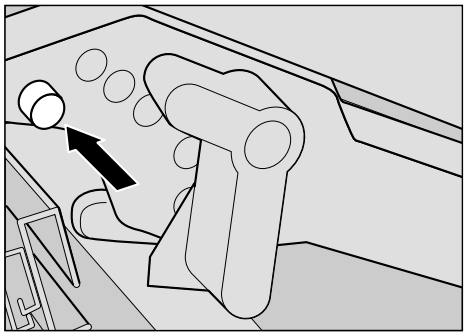

ZDJH992J

4 Turn the light brown lever clockwise.

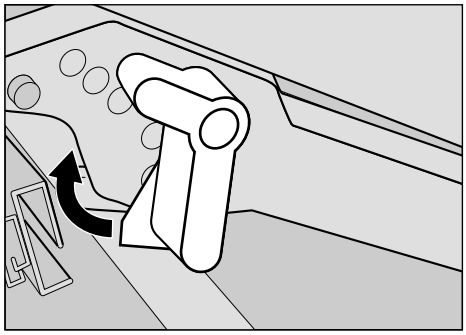

ZDJH020E

5 **Close the front cover slowly by pushing the two areas on the left and right.**

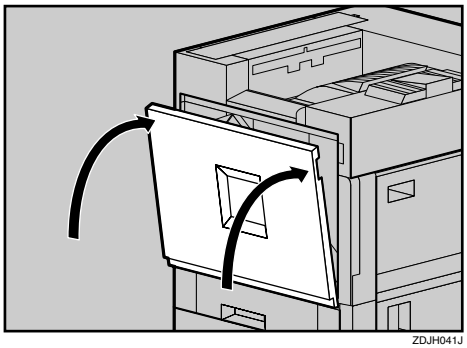

6 **Plug in the power cable and turn on the power switch.**

Consumables

⚠ ***CAUTION:***

- *Our products are engineered to meet the highest standards of quality and functionality. When purchasing expendable supplies, we recommend using only those specified by an authorized dealer.*

❖ Toner cartridge

Toner cartridge	Average printable number of pages per cartridge [*1]
Cyan	10,000 pages
Magenta	10,000 pages
Yellow	10,000 pages
Black	20,000 pages

[*1] A4 5% test chart, 5 pages/job

Note

❒ The actual number of printed pages you get from a particular toner cartridge depends on the type and size of paper you are using, the contents of your print images, and printing environment conditions. All this means that a toner cartridge might require replacement sooner than the normal life described above.

❒ Toner cartridges that come with the printer are for setup purposes, and will not provide the number of pages described above. The average number of printable pages that can be expected from the toner cartridges included in the printer are as follows:

- Black toner cartridge : about 10,000 pages
- Cyan, magenta and yellow toner cartridges : about 5,000 pages for each cartridge.

❖ Staple Cartridge

Cartridge type	Number of shots
Staple cartridge	5000 shots × 1 with cartridge
Staple Refill cartridge	Refill 5000 shots × 3

❖ Other consumables

Note

❒ Actual life of consumables depends on the type and size of paper you are using, the contents of your print images, and printing environment conditions. All that means that consumables might require replacement sooner than the life indicated. Furthermore, the life of color consumables may considerably shorten as mixed printing of black & white pages and color pages frequently occurs.

Name	Consumables	Average printable number of pages *1
Printer Maintenance Kit Type 3800A	Color Photoconductor Unit × 3	50,000 pages *2
Printer Maintenance Kit Type 3800B	Color Development Unit × 3	100,000 pages *2
Printer Maintenance Kit Type 3800C	Fusing Unit × 1	100,000 pages *2
Printer Maintenance Kit Type 3800D	Black Development Unit × 1	100,000 pages *2
Printer Maintenance Kit Type 3800E	Waste Toner Bottle × 1	50,000 pages
Printer Maintenance Kit Type 3800F	Black Photoconductor Unit × 1	50,000 pages *2
Printer Maintenance Kit Type 3800G	Fuser Oil Unit × 1	20,000 pages *2
Printer Maintenance Kit Type 3800H	Paper Feed Rollers × 1	150,000 pages

*1 A4 5% test chart, 5 pages/job
*2 When printing each page as a single job, the unit needs extra idling, thus reducing the unit's print life by half.

INDEX

A

Adjusting the Color Registration, 34
Auto Adjust, 34
Manual Adjust, 38
Adjusting the Image Density, 42
Adjusting the Registration of the Trays, 43
Appendix, 45

C

Caution, ii
Cleaning the DustProof Glass, 33
Cleaning the Registration Roller, 32
Clearing and Adjusting the Printer, 31
Color Adjustment
Checking the Test Sheet, 40
Consumables, 50

D

Detaching the SR770 (2 Tray Finisher), 1

E

Energy Star, iv

O

Opening and Closing the Duplex Reversal Unit, 2

R

Removing Misfed Paper into the Duplex Feed Unit, 45
Replacing Consumables and Maintenance Kit, 1
Replacing the Development Unit, 14
Replacing the Dustproof Filter, 23
Replacing the Fuser Oil Unit, 6
Replacing the Fusing Unit, 18
Replacing the Photoconductor Unit, 10
Replacing the Toner Cartridge, 3
Replacing the Waste Toner Bottle, 25

T

Toner Cartridge, 50

W

Warning, ii
When the Front Cover Does Not Close, 48

Copyright © 2001

UE USA G060-6920A

Introduction **3**
Trademarks **4**
ENERGY STAR Program **5**
How to Read This Manual **7**

1. Paper and Other Media

Paper and Other Media Supported by This Printer **9**
Paper Sizes 9
Paper Recommendations 21
Printable Area **27**
Loading Paper **28**
Loading Paper in Tray 1 28
Loading Paper in Tray 2 and the Optional Paper Feed Unit 29
Loading paper in Paper Bank PS470 (2000-sheet Large Capacity Tray) 32
If you load a paper size that is not selected automatically 33
Changing the paper type 35
Load Paper in the Bypass Tray 37

2. Troubleshooting

Error & Status Messages on the Operation Panel **44**

Printer Does Not Print **62**

Other Printing Problems **65**

Removing Misfed Paper **71**

Detaching the 2 Tray Finisher 71
Opening and Closing the Duplex Reversal Unit 72
When "Remove Misfeed A:Internal Path" Appears 74
When "Remove Misfeed B: Fusing Unit" Appears 75
When "Remove Misfeed W: Mailbox" Appears 77
When "Remove Misfeed R: Finisher" Appears 78
When "Remove Misfeed Y: Paper Tray" Appears 81
When "Remove Misfeed Z1: Duplex Unit" Appears 82

Removing Jammed Staples **84**

Adding Staples **86**

Removing Punch-hole Chips **89**

When the message appears even after removing the Punch-hole chips 90

INDEX **91**

Introduction

To get maximum versatility from this machine all operators should carefully read and follow the instructions in this manual. Please keep this manual in a handy place near the machine.

Please read the Safety Information in the "Setup Guide" before using this machine. It contains important information related to USER SAFETY and PREVENTING EQUIPMENT PROBLEMS.

Trademarks

Microsoft, Windows and Windows NT are registered trademarks of Microsoft Corporation in the United States and/or other countries.

PostScript is a registered trademark of Adobe Systems Incorporated.

PCL is a registered trademark of Hewlett-Packard Company.

IPS-PRINT™ Printer Language Emulation Copyright 1999-2000, XIONICS DOCUMENT TECHNOLOGIES, INC., All Rights Reserved.

Ethernet is a registered trademark of Xerox Corporation.

Other product names used herein are for identification purposes only and might be trademarks of their respective companies. We disclaim any and all rights in those marks.

Notes:

Some illustrations might be slightly different from your machine.

Certain options might not be available in some countries. For details, please contact your local dealer.

Note

The proper names of the Windows operating systems are as follows:

- Microsoft® Windows® 95 operating system
- Microsoft® Windows® 98 operating system
- Microsoft® Windows® Millennium Edition (Windows Me)
- Microsoft® Windows ® 2000 Professional
- Microsoft® Windows ® 2000 Server
- Microsoft® Windows NT® Server operating system Version 4.0
- Microsoft® Windows NT® Workstation operating system Version 4.0

ENERGY STAR Program

ENERGY STAR®

As an ENERGY STAR Partner, we have determined that this machine model meets the ENERGY STAR Guidelines for energy efficiency.

The ENERGY STAR Guidelines intend to establish an international energy-saving system for developing and introducing energy-efficient office equipment to deal with environmental issues, such as global warming.

When a product meets the ENERGY STAR Guidelines for energy efficiency, the Partner shall place the ENERGY STAR logo onto the machine model.

This product was designed to reduce the environmental impact associated with office equipment by means of energy-saving features, such as Low-power mode.

❖ Low-power Mode (Energy Saver mode)

This printer automatically lowers its power consumption 60 minutes after the last operation has been completed. To exit Low-power (Energy Saver) mode, press any key on the operation panel. For details about how to configure Energy Saver mode, see "*Making Printer Settings with the Operation Panel*" in Administrator Reference 2 as a PDF file on the CD-ROM.

❖ Specifications

Energy Saver mode	Power Consumption	45 W or less
	Default Time	60 minutes
	Recovery Time	120 seconds or less

Recycled Paper

In accordance with the ENERGY STAR Program, we recommend use of recycled paper which is environment friendly. Please contact your sales or service representative for recommended paper.

How to Read This Manual

Symbols

In this manual, the following symbols are used:

⚠ *WARNING:*

This symbol indicates a potentially hazardous situation which, if instructions are not followed, could result in death or serious injury.

⚠ *CAUTION:*

This symbol indicates a potentially hazardous situation which, if instructions are not followed, may result in minor or moderate injury or damage to property.

* The statements above are notes for your safety.

Important

If this instruction is not followed, paper might be misfed, originals might be damaged, or data might be lost. Be sure to read this.

Preparation

This symbol indicates the prior knowledge or preparations required before operating.

Note

This symbol indicates precautions for operation, or actions to take after misoperation.

Limitation

This symbol indicates numerical limits, functions that cannot be used together, or conditions in which a particular function cannot be used.

Reference

This symbol indicates a reference.

[ ]

Keys that appear on the machine's panel display.

Keys and buttons that appear on the computer's display.

【 】

Keys built into the machine's operation panel.

Keys on the computer's keyboard.

Paper and Other Media Supported by This Printer

Paper Sizes

This section describes the type, size, feed direction, and maximum amount of paper that can be loaded into each paper tray in this printer.

Note

❒ The following symbols and terminology are used to represent the feed direction.

In this manual	On the panel display	Paper feed direction
← (Feed direction)	A4 (210 × 297) 8 1/2 × 11	Short-edge feed direction
← (Feed direction)	A4 (297 × 210) 11 × 8 1/2	Long-edge feed direction

❒ Be careful of the paper feed direction. The direction is determined for each paper size.

❖ Input Paper Sizes (Metric version)

	Feed direction	Size (mm)	Bypass tray	Paper Tray (Tray 1)	Paper Feed Unit (Tray 2/3/4)	2000-sheet Large Capacity Tray
A3	▭	297 × 420	☆	×	◎	×
B4 JIS	▭	257 × 364	☆	×	☆	×
A4	▭	210 × 297	☆	×	☆	×
	▯	297 × 210	☆	×	◎	×
B5 JIS	▭	182 × 257	☆	×	☆	×
	▯	257 × 182	☆	×	◎	×
A5	▭	148 × 210	☆	×	×	×
	▯	210 × 148	☆	×	◎	×
B6 JIS	▭	128 × 182	★	×	×	×
A6	▭	105 × 148	☆	×	×	×
11" × 17"	▭	279 × 432	☆	×	◎	×
Legal (LG, $8^1/_2$" × 14")	▭	216 × 356	☆	×	◎	×

	Feed direction	Size (mm)	Bypass tray	Paper Tray (Tray 1)	Paper Feed Unit (Tray 2/3/4)	2000-sheet Large Capacity Tray
Letter (LT, $8^1/_2$" × 11")	▭	216 × 279	☆	×	◎	×
	▯	279 × 216	☆	●	◎	●
$5^1/_2$" × $8^1/_2$"	▭	140 × 216	☆	×	×	×
Executive (Exec., $7^1/_4$" × $10^1/_2$")	▭	184 × 276	☆	×	☆	×
	▯	276 × 184	☆	×	×	×
Folio ($8^1/_4$" × 13")	▭	210 × 330	☆	×	☆	×
Foolscap (F4, $8^1/_2$" × 13")	▭	216 × 330	☆	×	☆	×
F/GL (8" × 13")	▭	203 × 330	☆	×	☆	×
Com#10 Env ($4^1/_8$" × $9^1/_2$")	▭	104.8 × 241.3	☆	×	×	×
C5 Env (6.38" × 9.02")	▭	162 × 229	☆	×	×	×
C6 Env (4.49" × 6.38")	▭	114 × 162	☆	×	×	×
DL Env (4.33" × 8.66")	▭	110 × 220	☆	×	×	×
Monarch Env ($3^7/_8$" × $7^1/_2$")	▭	98.4 × 190.5	☆	×	×	×

	Feed direction	Size (mm)	Bypass tray	Paper Tray (Tray 1)	Paper Feed Unit (Tray 2/3/4)	2000-sheet Large Capacity Tray
Custom Size	-	-	★*	×	×	×
8K ($10^1/_2$" × 15.35")	▭	267 × 390	☆	×	☆	×
16K (7.68" × $10^1/_2$")	▭	195 × 267	☆	×	☆	×
	▯	267 × 195	☆	×	☆	×

- ◎ means that the size is supported and printer select the paper size automatically.
- ☆ means that the size is supported but paper size should be selected with the operation panel.
- ★ means that the size is supported but paper size should be set with the operation panel as a custom size.
- ★* means that the supported size is approximately 90 - 305 mm in width, and approximately 148 - 458 mm in length. The supported size may differ depending on the printer language you use. Set the custom size setting with the operation panel.
- × means that the size is not supported.

❖ Input Paper Sizes (Inch version)

	Feed direction	Size (inch)	Bypass Tray	Paper Tray (Tray 1)	Paper Feed Unit (Tray 2/3/4)	2000-sheet Large Capacity Tray
11" × 17"	▭	11" × 17"	☆	×	◎	×
Legal (LG)	▭	$8^1/_2$" × 14"	☆	×	◎	×
Letter (LT)	▭	$8^1/_2$" × 11"	☆	×	◎	×
	▯	11" × $8^1/_2$"	☆	●	◎	●
$5^1/_2$" × $8^1/_2$"	▭	$5^1/_2$" × $8^1/_2$"	☆	×	×	×
Executive (Exec.)	▭	$7^1/_4$" × $10^1/_2$"	☆	×	☆	×
	▯	$10^1/_2$" × $7^1/_4$"	☆	×	×	×
A3	▭	11.26" × 16.54"	☆	×	◎	×
B4 JIS	▭	10.12" × 14.33"	☆	×	☆	×
A4	▭	8.26" × 5.83"	☆	×	☆	×
	▯	5.83" × 8.26"	☆	×	◎	×

	Feed direction	Size (inch)	Bypass Tray	Paper Tray (Tray 1)	Paper Feed Unit (Tray 2/3/4)	2000-sheet Large Capacity Tray
B5 JIS	▭	7.17" × 10.12"	☆	×	☆	×
	▯	10.12" × 7.17"	☆	×	◎	×
A5	▭	5.83" × 8.26"	☆	×	×	×
	▯	8.26" × 5.83"	☆	×	◎	×
B6 JIS	▭	5.04" × 7.17"	★	×	×	×
A6	▭	4.13" × 5.63"	☆	×	×	×
Folio	▭	$8^1/_4$" × 13"	☆	×	☆	×
Foolscap F4	▭	$8^1/_2$" × 13"	☆	×	☆	×
F/GL	▭	8" × 13"	☆	×	☆	×
Com#10 Env	▭	$4^1/_8$" × $9^1/_2$"	☆	×	×	×
C5 Env	▭	6.38" × 9.02"	☆	×	×	×
C6 Env	▭	4.49" × 6.38"	☆	×	×	×
DL Env	▭	4.33" × 8.66"	☆	×	×	×

	Feed direction	Size (inch)	Bypass Tray	Paper Tray (Tray 1)	Paper Feed Unit (Tray 2/3/4)	2000-sheet Large Capacity Tray
Monarch Env	▭	$3^7/_8$" × $7^1/_2$"	☆	×	×	×
Custom Size	-	-	★*	×	×	×
8K	▭	$10^1/_2$" × 15.35"	☆	×	☆	×
16K	▭	7.68" × $10^1/_2$"	☆	×	☆	×
	▯	$10^1/_2$" × 7.68"	☆	×	☆	×

- ◎ means that the size is supported and printer select the paper size automatically.
- ☆ means that the size is supported but the paper size should be selected with the operation panel.
- ★ means that the size is supported but the paper size should be set with the operation panel as a custom size.
- ★* means that the supported size is approximately 3.5 - 12 inch in width, and approximately 5.8 - 18 inch in length. The supported size may differ depending on the printer language you use. Set the custom size setting with the operation panel.
- × means that the size is not supported.

❖ Paper weight and number of sheets to be set

	Supported paper weight	**Maximum number of sheets (plain paper)** [*1]
Tray 1	60 - 105 g/m^2 (16 - 28 lb)	500 (80 g/m^2, 20 lb)
Tray 2	60 - 105 g/m^2 (16 - 28 lb)	500 (80 g/m^2, 20 lb)
Bypass Tray	52 - 162 g/m^2 (14 - 42 lb)	100 (80 g/m^2, 20 lb)
PAPER FEED UNIT Type 3800C (500 × 1)	60 - 105 g/m^2 (16 - 28 lb)	500 (80 g/m^2, 20 lb)
PAPER FEED UNIT Type 3800C (500 × 2)	60 - 105 g/m^2 (16 - 28 lb)	1000 (80 g/m^2, 20 lb)
Paper Bank PS470 (2000-sheet Large Capacity Tray)	60 - 105 g/m^2 (16 - 28 lb)	2000 (80 g/m^2, 20 lb)
SR770 (2 Tray Finisher)	60 - 105 g/m^2 (16 - 28 lb)	2000 (80 g/m^2, 20 lb)

[*1] Confirm that the top of the stack is not higher than the limit mark inside the tray.

❖ Output Paper Sizes (Metric version)

	Feed direction	Size (mm)	Standard Tray	Output Tray	2 Tray Finisher	4-bin Mailbox
A3	▭	297 × 420	○	○	○	○
B4 JIS	▭	257 × 364	○	○	○	○
A4	▭	210 × 297	○	○	○	○
	▯	297 × 210	○	○	○	○
B5 JIS	▭	182 × 257	○	○	○	○
	▯	257 × 182	○	○	○	○
A5	▭	148 × 210	○	○	×	○
	▯	210 × 148	○	○	○	○
B6 JIS	▭	128 × 182	○	○	×	×
A6	▭	105 × 148	○	○	×	×
11" × 17"	▭	279 × 432	○	○	○	○
Legal (LG, $8^1/_2$" × 14")	▭	216 × 356	○	○	○	○
Letter (LT, $8^1/_2$" × 11")	▭	216 × 279	○	○	○	○
	▯	279 × 216	○	○	○	○
$5^1/_2$" × $8^1/_2$"	▭	140 × 216	○	○	×	×

	Feed direction	Size (mm)	Standard Tray	Output Tray	2 Tray Finisher	4-bin Mailbox
Executive (Exec., $7^1/_4$" × $10^1/_2$")	▭	184 × 276	○	○	○	○
	▯	276 × 184	○	○	×	×
Folio ($8^1/_4$" × 13")	▭	210 × 330	○	○	○	×
Foolscap (F4, $8^1/_2$" × 13")	▭	216 × 330	○	○	○	×
F/GL (8" × 13")	▭	203 × 330	○	○	○	○
Com#10 Env ($4^1/_8$" × $9^1/_2$")	▭	104.8 × 241.3	×	○	×	×
CA Env (6.38" × 9.02")	▭	162 × 229	×	○	×	×
C6 Env (4.49" × 6.38")	▭	114 × 162	×	○	×	×
DL Env (4.33" × 8.66")	▭	110 × 220	×	○	×	×
Monarch Env ($3^7/_8$" × $7^1/_2$")	▭	98.4 × 190.5	×	○	×	×
Custom Size	-	-	○	○	×	○
8K ($10^1/_2$" × 15.35")	▭	267 × 390	○	○	○	×
16K (7.68" × $10^1/_2$")	▭	195 × 267	○	○	○	○
	▯	267 × 195	○	○	○	○

- ○ means that the size is supported.
- × means that the size is not supported.

❖ Output Paper Sizes (Inch version)

	Feed direction	Size (inch)	Standard Tray	Output Tray	2 Tray Finisher	4-bin Mailbox
11" × 17"	▭	11" × 17"	○	○	○	○
Legal (LG)	▭	$8^1/_2$" × 14"	○	○	○	○
Letter (LT)	▭	$8^1/_2$" × 11"	○	○	○	○
	▯	11" × $8^1/_2$"	○	○	○	○
$5^1/_2$" × $8^1/_2$"	▭	$5^1/_2$" × $8^1/_2$"	○	○	×	×
Executive (Exec.)	▭	$7^1/_4$" × $10^1/_2$"	○	○	○	○
	▯	$10^1/_2$" × $7^1/_4$"	○	○	×	×
A3	▭	11.26" × 16.54"	○	○	○	○
B4 JIS	▭	10.12" × 14.33"	○	○	○	○
A4	▭	8.26" × 5.83"	○	○	○	○
	▯	5.83" × 8.26"	○	○	○	○
B5 JIS	▭	7.17" × 10.12"	○	○	○	○
	▯	10.12" × 7.17"	○	○	○	○
A5	▭	5.83" × 8.26"	○	○	×	○
	▯	8.26" × 5.83"	○	○	○	○

	Feed direction	Size (inch)	Standard Tray	Output Tray	2 Tray Finisher	4-bin Mailbox
B6 JIS	▭	5.04" × 7.17"	○	○	×	×
A6	▭	4.13" × 5.63"	○	○	×	×
Folio	▭	$8^1/_4$" × 13"	○	○	○	×
Foolscap F4	▭	$8^1/_2$" × 13"	○	○	○	×
F/GL	▭	8" × 13"	○	○	○	○
Com#10 Env	▭	$4^1/_8$" × $9^1/_2$"	×	○	×	×
C6 Env	▭	4.49" 6.38"	×	○	×	×
C5 Env	▭	6.38" × 9.02"	×	○	×	×
DL Env	▭	4.33" × 8.66"	×	○	×	×
Monarch Env	▭	$3^7/_8$" × $7^1/_2$"	×	○	×	×
Custom Size	-	-	○	○	×	○
8K	▭	$10^1/_2$" × 15.35"	○	○	○	×
16K	▭	7.68" × $10^1/_2$"	○	○	○	○
	▯	$10^1/_2$" × 7.68"	○	○	○	○

- ○ means that the size is supported and that the paper size should be set with the operation panel. There is no dial in the tray.
- × means that the size is not supported.

Paper Recommendations

Loading Paper

Important

- ❒ Do not use paper that is meant for an ink-jet printer or it may stick to the Fusing Unit and cause a paper misfeed.
- ❒ When printing on an OHP transparency that has a print side, load it with the print side over on the Bypass Tray. Not taking this precaution may cause it to stick to the Fusing Unit and cause a misfeed.
- ❒ Print quality cannot be guaranteed if recommended paper is not used. For details about recommended paper, contact your sales or service representative.
- ❒ Do not use paper that has already been printed onto by other printers.

Storing Paper

- Paper should always be stored properly. Improperly stored paper might result in poor print quality, paper misfeeds, or printer damage. Recommendations are as follows:
  - Avoid storing paper in humid areas.
  - Avoid exposing paper to direct sunlight.
  - Store on a flat surface.
- Keep open reams of paper in the package in which the paper came.

Types of Paper and Other Media

❖ Plain Paper

- Tray 1/2 can hold up to 500 sheets.
  PAPER FEED UNIT Type 3800C (500x1) can hold up to 500 sheets.
  PAPER FEED UNIT Type 3800C (500x2) can hold up to 1000 sheets.
  Paper Bank PS470 can hold up to 2000 sheets.
  Confirm that the top of the stack is not higher than the limit mark inside the tray.
- Bypass Tray supports custom size, approximately 3.5 - 12 inch in width, and approximately 5.8 - 18 inch in length.
- When printing on the reverse side of plain paper that is already printed on, you should load it on the Bypass Tray and select **[Plain (Duplex Backside)]** from **[Paper Type:]** with the printer driver.

❖ Thick Paper

- Use the Bypass Tray.
- The Bypass Tray can hold paper up to 135 kg (163 g/m^2) in weight. The print quality on paper that is thicker cannot be guaranteed.
- Confirm that the top of the stack is not higher than the limit mark inside the tray.
- When printing on thick paper, select thick paper mode with the printer driver.
- When printing on the reverse side of plain paper that is already printed on, you should load it on the Bypass Tray and select **[Thick (Duplex Backside)]** from **[Paper Type:]** with the printer driver.

Note

❒ The number of sheets to be set may vary depending on the paper thickness and paper type.

❖ OHP transparencies

- When printing on OHP transparencies, use the Bypass Tray.
- Load OHP transparencies on the tray with the print side over or they may stick to the Fusing Unit and cause a misfeed.
- Remove any unused OHP transparencies from the Bypass Tray after you are finished printing. Leaving them in the tray may cause them to stick together.
- When printing on OHP transparencies, you should select the OHP transparency mode with the printer driver.
- Confirm that the top of the stack is not higher than the limit mark inside the tray.
- When you print OHP transparencies more than one copies, remove each sheet from the tray one by one before next sheet is printed out, or select "Slip Sheet" in the printer driver. For details about using "Slip Sheet", see the printer driver Help file.

❖ Envelopes

Important

❒ Only envelopes ① and ② as shown below are supported.

① 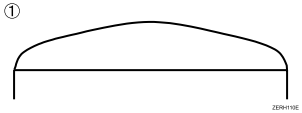	Supported *1
② 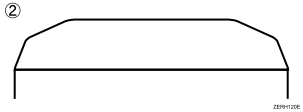	Supported *1
③ 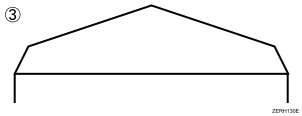	Not supported

*1 Misfeeds also might occur when using envelopes ① and ② depending on the length and shape of the flaps.

- When printing on envelopes, use the bypass tray, and select "Thick Paper" as a paper type in the "Paper Input" menu on the control panel. See p.41 “Specifying a paper type for the Bypass Tray”.
- Specifications of envelopes are as follows:

	Metric version	Inch version
Weight	72 - 90 g/m^2	19 - 24 lb
Recommended weight and size	72 g/m ^{2}, 114 × 162 mm (C6 Env)	24 lb, $3^7/_8$" × $7^1/_2$" (Monarch)

- You can load up to 10 envelopes (72 - 92 g/m^2, 19 - 24 lb) in the Bypass Tray at the same time, without forcibly pressing them. Confirm that the envelopes are not damp, and that the top of the stack is not higher than the limit mark on the side guide.
- Confirm that the print side is facing up when loading onto the Bypass Tray.
- When loading envelopes, be sure to unfold the flaps and position them opposite to the paper feed direction.

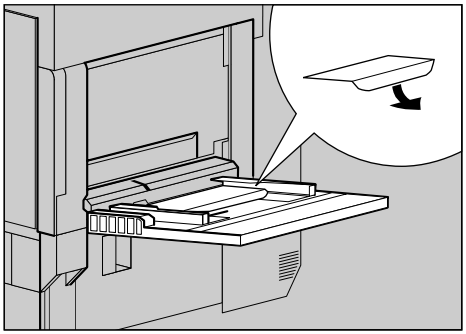

Note

❒ Make the printer driver's setting for rotating the print image by 180 degrees. For details, see the Help file for the printer driver.

- Confirm that there is no air in the envelopes before loading.
- To get better print quality, it is recommended that you set the right, left, top, and bottom print margin, to at least 15 mm (0.6") each.
- Do not print on both sides of envelopes.
- Load only one size and type of envelopes at the same time.
- Before loading envelopes, flatten the leading edges (the side being fed into the printer) of them by running a pencil or ruler across them.

- Before loading envelopes, confirm that they are rectangular in shape.
- Supported size of envelope is listed on *"Paper and Other Media"* in Maintenance Guide 2.

❖ Paper not supported by this printer

Avoid using the following types of paper that are not supported by this printer:

- Paper meant for an ink-jet printer
- Bent, folded, or creased paper
- Curled or twisted paper
- Torn paper
- Wrinkled paper
- Damp paper
- Paper that is dry enough to emit static electricity
- Paper that has already been printed onto, except a preprinted letterhead
- Coated paper
- Special paper, such as thermal paper, aluminum foil, carbon paper and conductive paper
- Paper whose weight is heavier or lighter than the limitation.
- With windows, holes, perforations, cutouts, or embossing
- Label paper on which glue or base paper is exposed
- Paper with clips or staples

Printable Area

The following shows the printable area for this printer. Be sure to set the print margins correctly by the application.

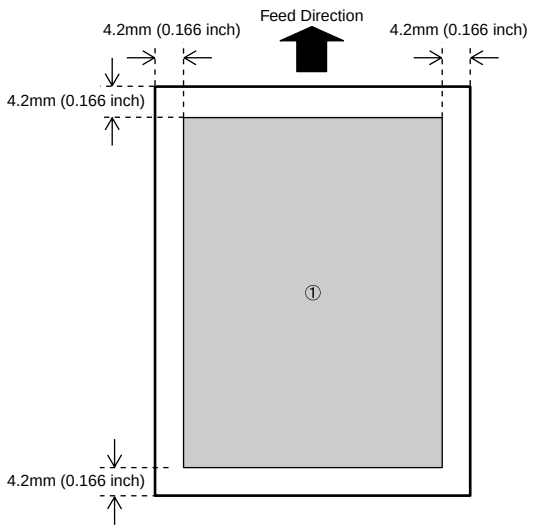

① : printable area

Note

❒ The printable area may vary depending on the paper size, printer language and printer driver settings.

Loading Paper

Load paper and change the paper size in Tray 1, Tray 2 and the optional Paper Feed Unit by following the procedures below.

Important

- ❒ Tray 1 uses 11 × 8$^1/_2$ ▯ paper exclusively. Load only 11 × 8$^1/_2$ paper at all times.
- ❒ 2000-sheet Large Capacity Tray uses 11 × 8$^1/_2$ ▯ paper exclusively. Load only 11 × 8$^1/_2$ paper at all times.
- ❒ If you want to load A4 ▯ paper in Tray 1 and optional 2000-sheet Large Capacity Tray, contact your sales or service representative.

Reference

- ❒ See p.9 “Paper Sizes” concerning paper to be loaded in the Paper Tray and optional Paper Feed Unit.

Loading Paper in Tray 1

Important

- ❒ Tray 1 uses 11 × 8$^1/_2$ ▯ paper exclusively. Load only 11 × 8$^1/_2$ paper at all times.
- ❒ If you want to load A4 ▯ paper in Tray 1, contact your sales or service representative.

1 Pull out the paper tray slowly until it stops.

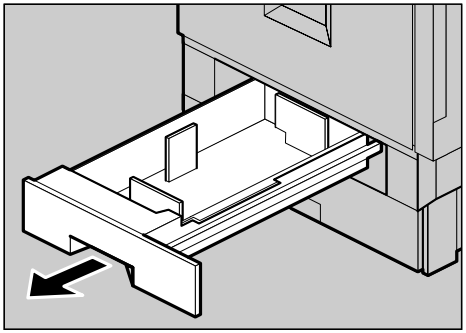

ZDJH003J

2 **Load paper into the tray with the print side down.**

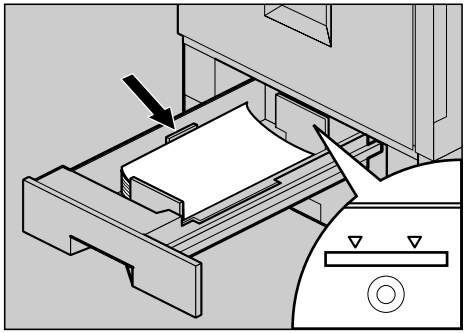

ZDJY001J

Important

❒ Confirm that the top of the stack is not higher than the limit mark inside the tray.

3 **Carefully slide the paper tray into the printer until it stops.**

Loading Paper in Tray 2 and the Optional Paper Feed Unit

This section describes loading paper which is different from default size in Tray 2.

1 **Pull out the Paper Tray slowly until it stops.**

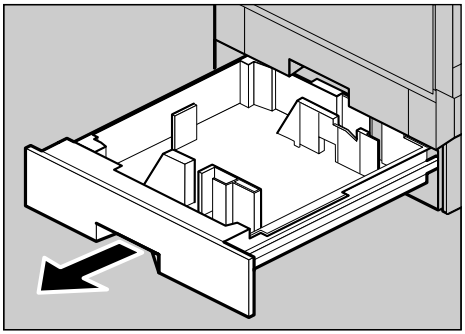

ZDJH005J

2 **Set the paper guide lock to the "unlocked" position.**

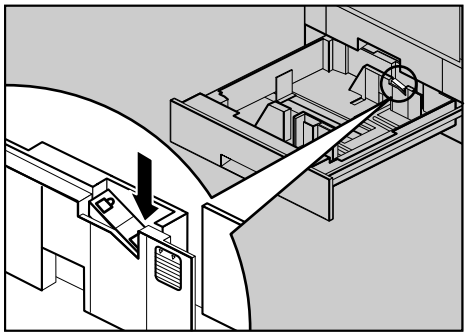

ZDJY003J

3 **Pushing the green lever of the side guide (①), move the side guide toward you to open it (②).**

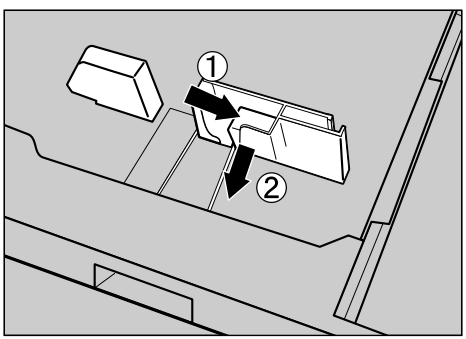

ZDJY802J

4 **Pinching both sides of the end guide (①), move the end guide in the direction of the arrow to open it.**

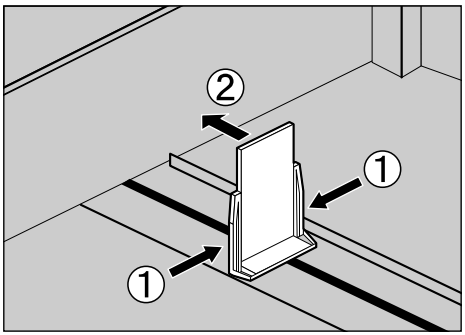

ZDJY801J

5 **Load paper in the same direction.**

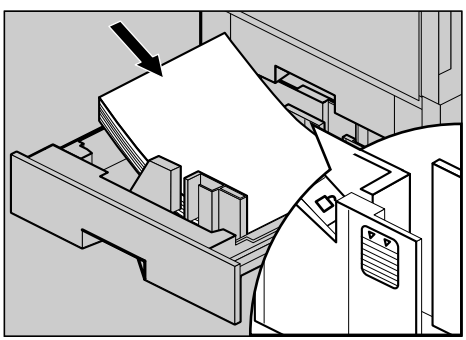

ZDJY002J

Important

- ❒ Confirm that the top of the stack is not higher than the limit mark inside the tray.

6 **Pushing the green lever of the side guide (①), move the side guide toward the paper stack until it stops (②).**

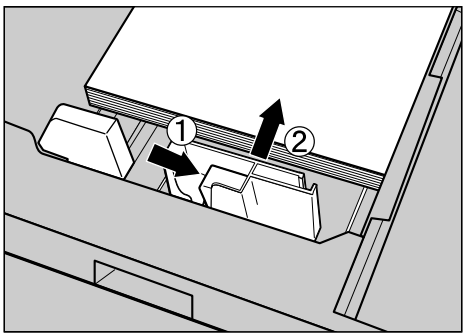

ZDJY006J

7 **Make sure the paper is fixed in place, and then lock the side guide.**

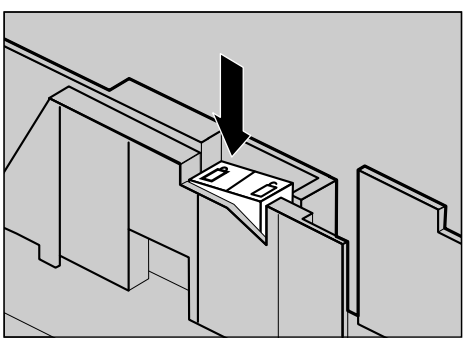

ZDJY007J

8 **Pinching both sides of the end guide (①), move the end guide toward the paper stack until it stops (②).**

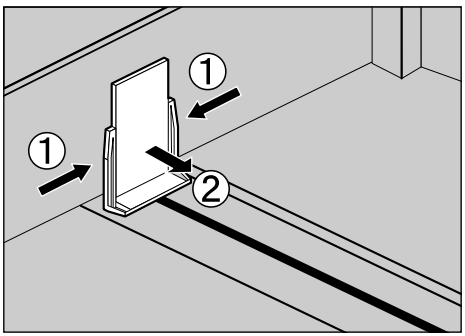

ZDJY005J

9 **Carefully slide the paper tray into the printer until it stops.**

Important

- ❒ Do not slide the paper tray in with force. If you do, the front and side guides might move.

Loading paper in Paper Bank PS470 (2000-sheet Large Capacity Tray)

Important

- ❒ 2000-sheet Large Capacity Tray uses 11 × $8^1/_2$ ▯ paper exclusively. Load only 11 × $8^1/_2$ paper at all times.
- ❒ If you want to load A4 ▯ paper in the 2000-sheet Large Capacity Tray, contact your sales or service representative.

1 **Pull out the Paper Tray slowly until it stops.**

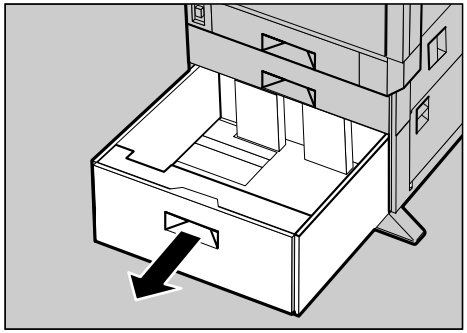

ZDJY008J

2 **With the print side down, align all four sides of two paper stacks, and then load them next to each other in the tray. Each side has a limit of 1,000 sheets.**

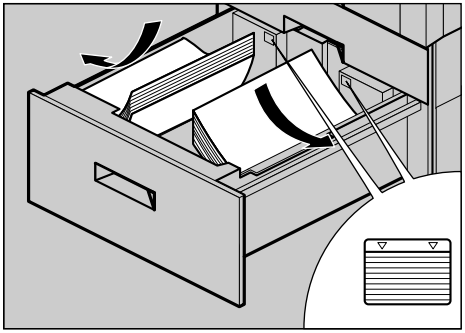

ZDJY009J

Important

- ❒ Align the paper and load them against the left and right walls, or a paper misfeed might occur.
- ❒ Confirm that the top of the stack is not higher than the limit mark inside the tray.

3 **Push in the Paper Tray slowly until it stops.**

If you load a paper size that is not selected automatically

Note

- Paper sizes that are not selected automatically are B4 ▭, A4 ▯, B5▭, $7^1/_4 \times 10^1/_2$▭, 8×13▭, $8^1/_2 \times 13$▭, $8^1/_4 \times 13$▭, 8K ($10^1/_2 \times 15.35$)▭, 16K ($7.68 \times 10^1/_2$)▭, 16K ($10^1/_2 \times 7.68$) ▯.

Reference

- See p.29 “Loading Paper in Tray 2 and the Optional Paper Feed Unit” for details about how to load the paper.

Important

- Tray 1 uses $11 \times 8^1/_2$ ▯ paper exclusively. Load only $11 \times 8^1/_2$ paper at all times.
- Paper Bank PS470 uses $11 \times 8^1/_2$ ▯ paper exclusively. Load only $11 \times 8^1/_2$ paper at all times.
- If you want to load A4 ▯ paper in Tray 1 and optional Paper Bank PS470, contact your sales or service representative.

This section uses A4 ▭ as an example.

1 **Press 【Menu】.**

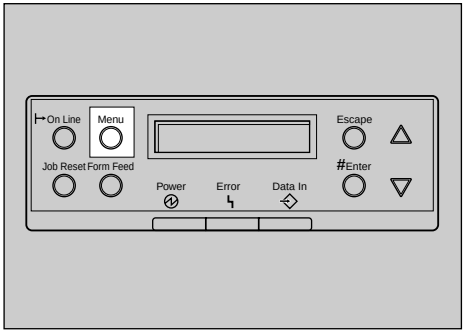

ZDJS001N

"Menu" appears on the panel display.

2 **Press 【▲】 or 【▼】 to display "Paper Input", and then press 【Enter】.**

```
Menu:
 Paper Input
```

The paper selection menu is displayed.

3 **Press 【▲】 or 【▼】 to display "Tray Paper Size", and then press 【Enter】.**

```
Paper Input:
 Tray Paper Size
```

The paper tray selection menu is displayed.

4 Press [▲] or [▼] to display the target paper tray, and then press [Enter].

```
Tray Paper Size:
 Tray 2
```

The paper size selection menu is displayed.

5 Press [▲] or [▼] to display the loaded paper size, and then press [Enter].

```
Tray2:
 A4 (210 x 297)
```

After about two seconds, the display is returned to the menu.

6 Press [On Line].

"Ready " appears on the panel display.

```
Ready
```

This completes the change in setting.

Important

- After printing on a paper size that is not selected automatically, if you want to print on paper that is selected automatically again, reload the paper, proceed to step 7, and return the setting to "Auto".

7 Press [Menu].

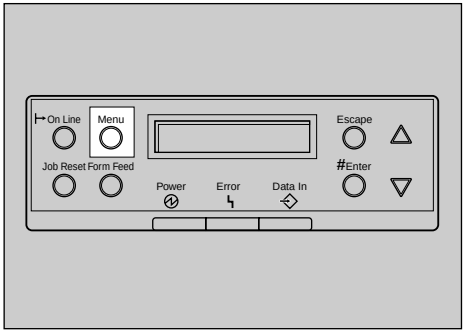

ZDJS001N

"Menu" appears on the panel display.

8 Press [▲] or [▼] to display "Paper Input", and then press [Enter].

```
Menu:
 Paper Input
```

The paper selection menu is displayed.

9 Press [▲] or [▼] to display "Tray Paper Size", and then press [Enter].

```
Paper Input:
 Tray Paper Size
```

The paper tray selection menu is displayed.

10 Press [▲] or [▼] to display the target paper tray, and then press [Enter].

```
Tray Paper Size:
 Tray 2
```

The paper size selection menu is displayed.

11 Press [▲] or [▼] to display "✱Auto", and then press [Enter].

```
Tray 2
*Auto
```

After about two seconds, the display is returned to the menu.

12 Press [On Line].

"Ready " appears on the panel display.

```
Ready
```

Changing the paper type

By selecting the paper type you want to load, the printer can execute better printing. You can select from the following paper types.

- Plain Paper, Recycled Paper, Special Paper, Color Paper, Letterhead Paper, Preprinted Paper, Prepunched Paper, Bond Paper, Card Stock

1 Press [Menu].

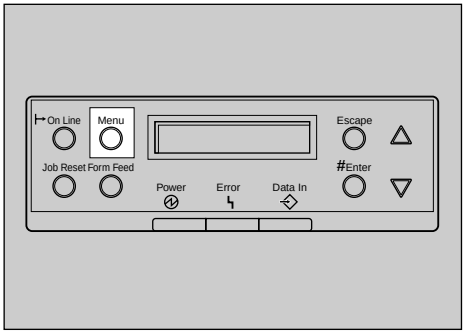

ZDJS001N

"Menu" appears on the panel display.

2 Press 【▲】 or 【▼】 to display "Paper Input", and then press 【Enter】.

```
Menu:
 Paper Input
```

The paper selection menu is displayed.

3 Press 【▲】 or 【▼】 to display "Paper Type", and then press 【Enter】.

```
Paper Input:
 Paper Type
```

The paper tray selection menu is displayed.

4 Press 【▲】 or 【▼】 to display the target paper tray, and then press 【Enter】.

```
Paper Type:
 Tray 2
```

The paper type selection menu is displayed.

5 Press 【▲】 or 【▼】 to display the loaded paper type, and then press 【Enter】.

```
Tray 2
 Recycled Paper
```

After about two seconds, the display is returned to the menu.

6 Press 【On Line】.

"Ready " appears on the panel display.

```
Ready
```

Load Paper in the Bypass Tray

Besides regular paper, you can load thick paper, envelopes, OHP transparencies, and paper that is longer than A3 onto the Bypass Tray, which cannot be loaded in the Paper Trays or Paper Feed Unit.

Note

- ❒ Paper sizes supported by the Bypass Tray are 3.5 - 12 inch in width, and 5.8 - 18 inch in length.
- ❒ If you load custom size paper or special paper, select the paper size with the operation panel. The RPCS printer driver can select the paper size with the printer driver properties. The paper size selected with the printer driver overrides the one selected with the operation panel. See p.40 “Specifying a custom paper size for the Bypass Tray”.
- ❒ If you load thick paper, OHP transparencies, or envelopes, make the settings for thick paper or OHP transparencies with the operation panel or printer driver. See p.41 “Specifying a paper type for the Bypass Tray”.
- ❒ The number of pages that can be loaded in the Bypass Tray differs depending on the paper type. Confirm that the top of the stack is not higher than the limit mark inside the tray.

Limitation

- ❒ You cannot use the following functions when printing on paper that is loaded in the Bypass Tray.
  - Duplex Print
  - Collate, Job Separation
  - Staple/Punch
  - Limitless Paper Feed

1 **Open the bypass tray.**

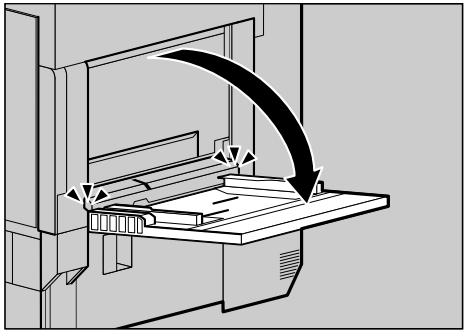

Note

- ❒ If you load A4 or larger size paper, pull out the bypass tray extension, and then flip it open.

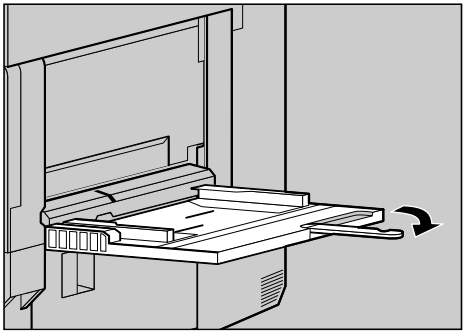

ZDJH203J

2 Slide the side guides outward(①), and then load paper until it stops with the print side up (②).

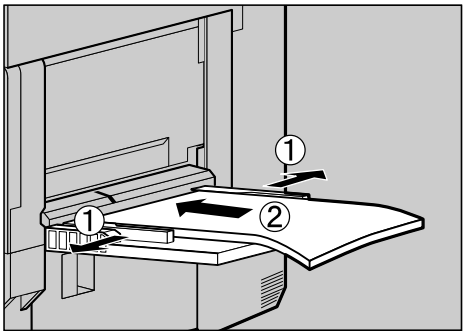

ZDJH204J

3 Adjust the side guides to the paper width.

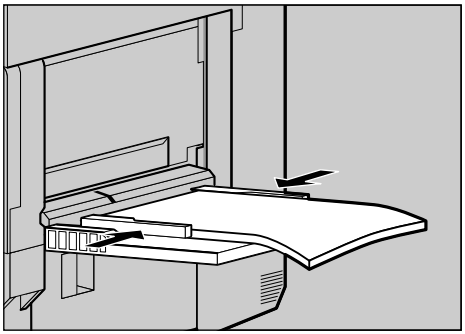

ZDJH205J

Important

- ❒ Confirm that the top of the stack is not higher than the limit mark inside the tray.
- ❒ Shuffle the paper before loading the stack onto the tray so multiple sheets are not fed in at one time.

4 Set the paper size using the operation panel as follows:

❶ **Press 【Menu】.**

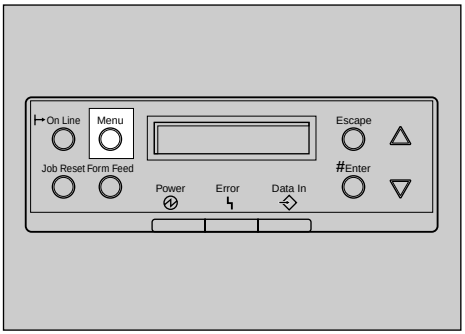

ZDJS001N

"Menu" appears on the panel display

❷ **Press 【▲】 or 【▼】 to "Paper Input" menu, and then press 【Enter】.**

The following message appears on the panel display.

```
Menu:
 Paper Input
```

❸ **Confirm that "Bypass Size" is displayed, and then press 【Enter】.**

The following message appears on the panel display.

```
Paper Input:
 Bypass Size
```

❹ **Press 【▲】 or 【▼】 to display the size and direction of the paper in the bypass tray.**

```
Bypass Size
*11 x 17
```

After about two seconds, the display is returned to the menu.

❺ **Press 【On Line】.**

"Ready " appears on the panel display.

```
Ready
```

Specifying a custom paper size for the Bypass Tray

Important

- ❒ The paper size selected with the printer driver overrides the one selected with the operation panel. You do not have to make settings with the operation panel if you already made them with the printer driver. However, when printing with a printer driver other than the RPCS printer driver, you must make the settings using the operation panel. For more information about the printer driver, see the Help Files.
- ❒ The printer cannot print from applications that do not supports custom paper size.

1 **Press 【Menu】.**

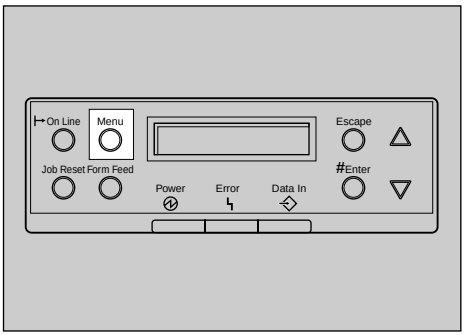

ZDJS001N

"Menu" appears on the panel display.

2 **Press 【▲】 or 【▼】 to display "Paper Input", and then press 【Enter】.**

The following message appears on the panel display.

```
Menu:
 Paper Input
```

3 **Confirm that "Bypass Size" is displayed, and then press 【Enter】.**

The following message appears on the panel display.

```
Paper Input:
 Bypass Size
```

4 **Press 【▲】 or 【▼】 to display "Custom Size", and then press 【Enter】.**

The following message appears on the panel display.

```
Bypass Size:
 Custom Size
```

5 **Press [▲] or [▼] to set the horizontal value, and then press [Enter].**

The following message appears on the panel display.

```
Custom Size:
 Vert.        0 "
```

6 **Press [▲] or [▼] to set the vertical value, and then press [Enter].**

```
Custom Size:
 Horiz.       0 "
```

After about two seconds, the display is returned to the menu.

7 **Press [On Line].**

The following message appears on the panel display.

```
Ready
```

Specifying a paper type for the Bypass Tray

By selecting the paper type you want to load, the printer can execute better printing. You can select from the following paper types.

- Plain Paper, Recycled Paper, Special Paper, Color Paper, Letterhead, Preprinted, Prepunched, Labels, Bond Paper, Card Stock, OHP Transparencies, Thick Paper, Plain Paper (Duplex), Thick Paper (Duplex)

Important

❒ Be sure to select the paper type when you load labels, thick paper, or OHP transparencies in the Bypass Tray.

Limitation

❒ You cannot use the following functions when printing on paper loaded in the Bypass Tray.

- Duplex Print
- Collate, Job Separation
- Staple, Punch
- Limitless Paper Feed

1 Press 【Menu】.

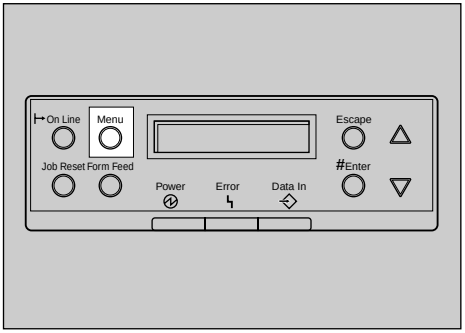

ZDJS001N

"Menu" appears on the panel display.

2 Press 【▲】 or 【▼】 to display "Paper Input", and then press 【Enter】.

The following message appears on the panel display.

```
Menu:
 Paper Input
```

3 Press 【▲】 or 【▼】 to display "Paper Type", and then press 【Enter】.

The following message appears on the panel display.

```
Paper Input:
 Paper Type
```

4 Press 【▲】 or 【▼】 to display "Bypass Tray", and then press 【Enter】.

The following message appears on the panel display.

```
Paper Type:
 Bypass Tray
```

5 Press 【▲】 or 【▼】 to display the target paper type, and then press 【Enter】.

```
Bypass Tray:
*Thick Paper
```

After about two seconds, the display is returned to the menu.

6 **Press 【On Line】.**

The following message appears on the panel display.

```
Ready
```

Error & Status Messages on the Operation Panel

❖ Status Messages

Messages/Second messages	Description	Solution
Calibrating...	The printer is calibrating the color.	Wait for a while.
Energy Save Mode	In Energy Save Mode Level 2.	No action required.
Hex Dump Mode	In Hex Dump Mode.	No action required.
Loading Toner...	The printer is loading the toner.	Wait for a while.
Offline	The printer is offline and cannot print data.	Press 【On Line】.
Initializing... Please Wait	The printer is initializing the development unit.	Wait for a while.
Printing...	The printer is doing print job.	Wait for a while.
Processing...	Print data is being processed.	Wait for a while.
Ready	The default ready message. The printer is ready to use.	No action required.
Resetting Job...	Job is being reset.	Wait for a while.
Waiting...	The printer is waiting for the next data to print.	Wait for a while.
Warming Up...	The printer is warming up and not ready.	Wait until the printer signals Ready.

❖ Alert Messages

Messages/Second messages	Description	Solution
Add Staples	The stapler is out of staples. Job is not stapled.	Replace new staples. See p.86 “Adding Staples” .
Add Toner/Yellow/Magenta/Cyan/Black	The printer is out of the indicated toner(s).	Replace a new toner cartridge of the indicated color(s). See "*Replacing Consumables and Maintenance Kit*" in Maintenance Guide 1.
Add Toner Black	The printer is out of toner (K).	Replace a new toner cartridge (K). See "*Replacing Consumables and Maintenance Kit*" in Maintenance Guide 1.
Add Toner Cyan	The printer is out of toner (C).	Replace a new toner cartridge (C). See "*Replacing Consumables and Maintenance Kit*" in Maintenance Guide 1.
Add Toner Magenta	The printer is out of toner (M).	Replace a new toner cartridge (M). See "*Replacing Consumables and Maintenance Kit*" in Maintenance Guide 1.
Add Toner Yellow	The printer is out of toner (Y).	Replace a new toner cartridge (Y). See "*Replacing Consumables and Maintenance Kit*" in Maintenance Guide 1.

Messages/Second messages	Description	Solution
Call Service: EC Power Off On /If Error Reoccur Call Service	A communication error sent from the engine to the controller.	Turn the power switch off and then on. If the message appears again, contact your sales or service representative.
Change Setting Tray # /Paper Size: Paper Type:	The paper size and type setting in the tray differs from that of actual paper size and type in the tray.	Load {paper size and type} paper with the selected feed direction into the tray, and then change the paper size and type with the operation panel. Or press 【**Form Feed**】, and then select the tray with the operational panel. Or press 【**Job Reset**】 to cancel the print job.
Close Duplex Unit Cover	The cover for the duplex unit is open.	Close the cover for the duplex unit.
Close Finisher Front Cover	The front cover for the finisher is open.	Close the front cover for finisher.
Close Right Cover	The upper right cover (the cover for the toner cartridge) is open.	Close the upper right cover.
Close Finisher Upper Cover	The finisher upper cover is open.	Close the upper cover for the finisher.
Close Finisher Upper Cover	The paper entrance cover for the finisher is open.	Close the upper entrance cover for the finisher.
Close Front Cover	The front cover is open.	Close the front cover for the printer.
Close Lower Right Cover	The right cover for the paper feed table/large capacity tray is open.	Close the right cover for the paper feed table/large capacity tray.

Messages/Second messages	Description	Solution
Close Mailbox Cover	The cover for 4-bin Mailbox is open.	Close the cover for the 4-bin Mailbox tray.
Close Right Cover	The right cover is open.	Close the right cover.
Close Upper Left Cover	The upper left cover (the cover for the fusing unit) is open.	Close the upper left cover.
Driver Setting Error (Memory)	The printer identified a download error.This error may occur when the installed memory amount is less than the driver setting.	Verify that the paper memory size is specified with tha driver setting.
Duplex Cancelled	The setting of Duplex Print has been cancelled.	(a) To print the image correctly, add memory to the printer. (b) Be sure to use the correct paper.
Error:Tray 1 Reset The Job /Then Power OffOn	There is a problem with the current specified tray. The job can not be processed.	Reset the job then turn the printer Off, and then back On.
Error:Tray 1 Form Feed /Or Job Reset Then Power OffOn	The printer identified the failure of the indicated paper tray. The job is not printed.	Apply Form Feed from other tray or cancel the job, and then switch your printer Off then back On. If the error continues,contact your sales or service representative.
Exceeded Max. Pages (Collate)	The printer identified a collation page overflow error.	Increase the RAM capacity. Install the optional hard disk drive.
Exceeded Max. Stored Files	The maximum number of stored files has been exceeded during Sample Print of Lacked Print.	Delete the stored files.

Messages/Second messages	Description	Solution
Exceeded Max. Stored Pages	The maximum number of pages has been exceeded during Sample Print of Lacked Print	Reduce the number of pages to print.
Hardware Problem DIMM	The printer identified a DIMM sum value error.	Remove and re-install the DIMM correctly. Remove any dust under the DIMM. If the message appears again, contact your sales or service representative. See "*Setting Up*" in the Setup Guide.
Hardware Problem Ethernet	The printer identified an ethernet error.	Turn the power switch off and then on. If the message appears again, contact your sales or service representative.
Hardware Problem Finisher	There is a problem with the finisher.	Turn the power switch off and then on. If the message appears again, contact your sales or service representative.
Hardware Problem HDD	The printer identified a HDD Board error.	Remove and re-install the HDD Board correctly. If the message appears again, contact your sales or service representative. See "*Setting Up*" in the Setup Guide.

Messages/Second messages	Description	Solution
Hardware Problem IEEE1394	The printer identified an IEEE1394 Board error.	Remove and re-install the IEEE1394 Board correctly. ① Confirm that the IEEE 1394 Interface Unit Type1045 is attached to the computer correctly. ② Confirm that the IEEE 1394 interface cable is connected securely. ③ Unplug the IEEE 1394 interface cable which is connected to the printer. ④ Restart the computer. If the message appears again even after executing above operation, proceed to the following steps. ⑤ Execute the utility tool for IEEE 1394 Interface Unit Type1045 which is stored in the following path in the CD-ROM labeled "Printer Drivers and Utilities". **UTILITY\1394** **Important** ❒ For details about using the utility tool for IEEE 1394, see the README file in the same directry in the CD-ROM. If the message appears again, contact your sales or service representative. See "*Setting Up*" in the Setup Guide.

Messages/Second messages	Description	Solution
Hardware Problem NV-RAM	The printer identified a Memory Switch(User Account Enhance Unit) error.	Replace the User Account Enhance Unit.
Hardware Problem Option RAM	The printer identified an optional RAM error.	Remove and re-install the optional RAM. If the message appears again, contact your sales or service representative.
Hardware Problem Parallel I/F	There is a problem with the parallel interface.	If you use the parallel I/F, replace the interface cable that caused the error. If the message apperars again, contact your sales or service representative.
Hardware Problem Staple Unit	There is misfeed in the finisher or there is a problem with the staple unit failure.	Remove the misfeed. If the message appears again, contact your sales or service representative. See p.78 “When "Remove Misfeed R: Finisher" Appears” See p.84 “Removing Jammed Staples”
Hardware Problem Tray 1	There is a problem with the paper lift motor of the Tray 1.	Turn the power switch off and then on. If the message appears again, contact your sales or service representative.
Hardware Problem Tray 2	There is a problem with the paper lift motor of the Tray 2.	Turn the power switch off and then on. If the message appears again, contact your sales or service representative.

Messages/Second messages	Description	Solution
Hardware Problem Tray 3	There is a problem with the paper lift motor of the paper tray 3.	Align paper and set them collect position in the paper tray 3.
		Turn the power switch off and then on. If the message appears again, contact your sales or service representative.
Hardware Problem Tray 4	There is a problem with the paper lift motor of the paper tray 4.	Turn the power switch off and then on. If the message appears again, contact your sales or service representative.
HDD Full	The maximum HDD area size for form/font has been exceeded.	Delete the disused form /font types.
	An HDD overflow error occurred during Sample Print or Lacked Print.	Delete the stored files or reduce the size of the Sample Print file or Lacked Print file.
HDD Not Installed	The user tries to print the Lacked Print data without HDD installed.	If you use the Locked Print feature, make sure to install HDD. If the error continues, contact your sales or service representative.
I/O Buffer Overflow	The maximum size of the I/O buffer has been exceeded.	Increase the size of the I/O buffer through the I/F Setup.
Invalid Password Try Again	The entered password with the operation panel is not correct.	Enter the correct password with the operation panel.

Messages/Second messages	Description	Solution
Load Correct Size Paper /Press # To Continue	The paper size setting in the tray differs from that of actual paper size in the tray.	Load {paper size} paper with the selected feed direction into the tray, and then change the paper size with the operation panel. Or press 【**Form Feed**】, and select the tray with the operational panel. Or press 【**Job Reset**】 to cancel the print job.
Load Paper Tray #	The indicated tray is out of paper. #: tray number	Load paper into the indicated paper tray.
Load Paper /Paper Size: Paper Type:	1:The printer received a request for a paper type, or paper size not available in the printer, and Tray Locking is not applicable. 2:The paper type and size loaded in the tray which the printer serched using Tray Locking is Invalid for Duplex Print.	Change the setting of the indicated paper input tray, or press 【**Job Reset**】. Form Feed is not applicable here.
Menu Protected Cannot Change	The menu is protected and the setting cannot be changed.	Wait for two seconds until the previous display appears.
No Files Exist	There are no files available for Sample Print job or Locked Print job.	Wait for two seconds until the previous display appears.
P=07 I=9Fc01234 Power Off On /If Error Reoccur Call Service	A controller error. The SC number indicates the problem.	Turn the power switch off and then on. If the message appears again, contact your sales or service representative.

Messages/Second messages	Description	Solution
Paper Invalid for Duplex:Tray# /Change Setting or Form Feed	The printer detected the setting of the indicated tray is invalid for Duplex Tray. #: tray number	Change the setting of the indicated paper input tray or apply Form Feed using another tray, or press 【**Job Reset**】.
Punch-hole Chips are Full	The Punch Chips is full of punch chips.	Remove the punch chips from the punch wast box.. See p.89 “Removing Punch-hole Chips” When the message appears even the punch waste box is not full, remove the punch-hole chips on the top of the punch waste box. See p.90 “When the message appears even after removing the Punch-hole chips”
Remove MisfeedA:Internal Path /See Instructions in Front Cover	There is a misfeed in the printer.	Remove the misfed paper following the instructions inside the front cover. For more information, see p.74 “When "Remove Misfeed A:Internal Path" Appears”.
Remove MisfeedB: Fusing Unit /See Instructions in Front Cover	There is a misfeed in the fusing unit.	Remove the misfed paper following the instructions inside the front cover. For more information, see p.75 “When "Remove Misfeed B: Fusing Unit" Appears”.

Messages/Second messages	Description	Solution
Remove MisfeedR: Finisher /Open Front Cover	There is a misfeed in the finisher.	Open the finisher cover and remove misfeed. For more information, see p.78 “When "Remove Misfeed R: Finisher" Appears”.
Remove MisfeedW: Mailbox /Open Mailbox Cover	There is a misfeed in the output 4-bin tray.	Open the mailbox cover and remove misfeed. For more information, see p.77 “When "Remove Misfeed W: Mailbox" Appears”.
Remove MisfeedY: Paper Tray /See Instructions in Front Cover	There is a misfeed in the specified input tray, or the printer is not feeding paper.	Remove the misfed paper following the instructions inside the front cover. For more information, see p.81 “When "Remove Misfeed Y: Paper Tray" Appears”.
Remove MisfeedZ1: Duplex Unit /See Instructions in Front Cover	There is a misfeed in the duplex unit.	Remove the misfed paper following the instructions inside the front cover. For more information, see p.82 “When "Remove Misfeed Z1: Duplex Unit" Appears”.
Remove MisfeedZ2:Dup.Feed Unit /See Instructions in Front Cover	There is a misfeed in the duplex feed unit.	Remove the misfed paper. See "*Removing Misfed Paper in the Duplex Feed Unit*" in Maintenance Guide 1.
Remove Paper All Output Trays	All output trays are full.	Remove paper from all output trays.

Messages/Second messages	Description	Solution
Remove Paper Finisher Tray #	The indicated finisher shift tray is full. #:finisher shift tray number	Remove the paper from the indicated finisher shift tray.
Remove Paper From Upper Tray	The upper tray (output 1-bin tray)is full.	Remove paper from the upper tray.
Remove Paper Inside Finisher	There is still paper in the finisher.	Open the cover for the finisher and remove paper. See p.78 “When "Remove Misfeed R: Finisher" Appears”
Remove Paper Inside Finisher	A communication error is sent from the system unit to the duplex unit.	Remove and re-install the duplex unit. If the problem continues, contact your sales or service representative.
Remove Paper Mailbox Tray #	The output tray # of the optional 4-bin Mailbox is full. #:mailbox tray number	Remove paper from the indicated 4-bin Mailbox tray.
Remove Paper Standard Tray	The standard output tray is full	Remove paper from standard output trays.
Replace Black Dev. Unit(TypeD)	It is time to replace the black development unit.	Replace a new black development unit. Depending on your service contract, contact your sales or service representative. See "*Replacing Consumables and Maintenance Kit*" in Maintenance Guide 1.

Messages/Second messages	Description	Solution
Replace Black PCU (Type F)	It is time to replace the black PCU.	Replace a new black PCU. Depending on your service contract, contact your sales or service representative. See "*Replacing Consumables and Maintenance Kit*" in Maintenance Guide 1.
Replace Color Dev. Unit(TypeB)	It is time to replace the color development unit.	Replace a new color development unit. Depending on your service contract, contact your sales or service representative. See "*Replacing Consumables and Maintenance Kit*" in Maintenance Guide 1.
Replace Color PCU (Type A)	It is time to replace the color PCU.	Replace a new color PCU. Depending on your service contract, contact your sales or service representative. See "*Replacing Consumables and Maintenance Kit*" in Maintenance Guide 1.

Messages/Second messages	Description	Solution
Replace Fuser Oil Unit (TypeG)	It is time to replace the fuser oil unit.	Replace a new fuser oil unit. Depending on your service contract, contact your sales or service representative. See "*Replacing Consumables and Maintenance Kit*" in Maintenance Guide 1.
Replace FuserOilUnit soon (TypeG)	The fuser oil unit should be replaced soon.	Prepare a new fuser oil unit. Depending on your service contract, contact your sales or service representative. See "*Replacing Consumables and Maintenance Kit*" in Maintenance Guide 1.
Replace Fusing Unit (Type C)	It is time to replace the fusing unit.	Peplace a new fusing unit. Depending on your service contract, contact your sales or service representative. See "*Replacing Consumables and Maintenance Kit*" in Maintenance Guide 1.

Messages/Second messages	Description	Solution
Replace FusingUnit soon (TypeC)	The fusing unit should be replaced soon.	Prepare a new fusing unit. Depending on your service contract, contact your sales or service representative. See "*Replacing Consumables and Maintenance Kit*" in Maintenance Guide 1.
Replace Waste Toner (Type E)	It is time to replace the waste toner.	Replace a new fusing unit. Depending on your service contract, contact your sales or service representative. See "*Replacing Consumables and Maintenance Kit*" in Maintenance Guide 1.
Reset Cyan Toner Correctly	The toner cartridge (C) is not set correctly or is not set, and the color printing is non-applicable.	Set the toner cartridge (C) correctly. See "*Setting Up*" in the Setup Guide.
Reset Develop. Unit Correctly /Yellow/Magenta Cyan/Black	The indicated development unit(s) is/are not set correctly, or is not set.	Set the indicated development unit(s) correctly. See "*Replacing Consumables and Maintenance Kit*" in Maintenance Guide 1.
Reset Duplex Unit Correctly	The duplex paper feed unit is not set correctly or is not set.	Remove and re-install the duplex paper feed unit. If the error continues, contact your sales or service representative. See "*Setting Up*" in the Setup Guide.

Messages/Second messages	Description	Solution
Reset Finisher Correctly	Finisher is not set correctly, or is not set.	Set the finisher correctly. See "*Setting Up*" in the Setup Guide.
Reset Fuser Oil Unit Correctly	The fuser oil unit is not set correctly, or is not set.	Set the fuse oil unit correctly. See "*Replacing Consumables and Maintenance Kit*" in Maintenance Guide 1.
Reset Fusing Unit Correctly	There is no fusing unit, or the fusing unit is not installed correctly.	Set the fusing unit correctly. See "*Replacing Consumables and Maintenance Kit*" in Maintenance Guide 1.
Reset Magenta Toner Correctly	The toner cartridge (M) is not set correctly or is not set, and the color printing is non-applicable.	Set the toner cartridge (M) correctly. See "*Setting Up*" in the Setup Guide.
Reset PCU Correctly /Yellow/Magenta Cyan/Black	The indicated Photoconductor Unit(s) is/are not set correctly, or is not set.	Set the indicated Photoconductor Unit(s) correctly. See "*Replacing Consumables and Maintenance Kit*" in Maintenance Guide 1.
Reset Toner Black	The indicated toner cartridge is not set correctly.	Set the indicated toner cartridge(s) correctly. See "*Setting Up*" in the Setup Guide.
Reset Toner Cyan	The indicated toner cartridge is not set correctly.	Set the indicated toner cartridge(s) correctly. See "*Setting Up*" in the Setup Guide.

Messages/Second messages	Description	Solution
Reset Toner Magenta	The indicated toner cartridge is not set correctly.	Set the indicated toner cartridge(s) correctly. See "*Setting Up*" in the Setup Guide.
Reset Toner Yellow	The indicated toner cartridge is not set correctly.	Set the indicated toner cartridge(s) correctly. See "*Setting Up*" in the Setup Guide.
Reset Transfer Unit Correctly	The transfer unit is not set correctly, or is not set.	Contact your sales or service representative.
Reset Tray 1 Correctly	The indicated paper input tray is not set correctly, or is not set.	Set the indicated paper input tray correctly.
Reset Tray Correctly	The printer detected, when processing a job through Auto Tray Select, that any of paper input tray is not set correctly, or is not set.	Set the indicated paper input tray correctly.
Reset Waste Toner Correctly	The waste toner bottle is not set correctly, or is not set.	Set the waste toner bottle correctly.
Reset Yellow Toner Correctly	The toner cartridge (Y) is not set correctly or is not set, and the color printing is non-applicable.	Set the toner cartridge (Y) correctly. See "*Setting Up*" in the Setup Guide.
RPCS Graphic Error	The graphic is not initialized because the graphic memory was not reserved.	Replace the installed memory.
RPCS Memory Overflow	The printer memory is not initialized because the CDC memory was not reserved via the system call.	Replace the installed memory.

Messages/Second messages	Description	Solution
RPCS Syntax Error	The printer identified a syntax error. This error results from; data transmogrification caused by the transmission path problem, data interruption, data transmission from other drivers, etc.	Be sure to use the correct driver.
SC XXX-X Power Off On /If Error Reoccur Call Service	The Service Code or SC number indicates the problem.	Turn the power switch off and then on. If the message appears again, contact your sales or service representative.
Staple Cancelled	The Staple feature has been cancelled.	Verify that the paper orientation and layout is property set, and make sure whether your desired settings for the finisher is selected.
Toner is Almost Empty: Black	The printer is almost out of toner (K).	Prepare a new toner cartridge (K).
Toner is Almost Empty: Cyan	The printer is almost out of toner (C).	Prepare a new toner cartridge (C).
Toner is Almost Empty: Magenta	The printer is almost out of toner (M).	Prepare a new toner cartridge (M).
Toner is Almost Empty: Yellow	The printer is almost out of toner (Y).	Prepare a new toner cartridge (Y).
Waste Toner is Almost Full (E)	The waste toner bottle is almost full of toner dust.	Prepare a new waste toner bottle or contact your sales or service representative. See "Appendix" in the Setup Guide.

Printer Does Not Print

Possible Cause	Solutions
Is the power on?	Confirm that the cable is securely plugged into the power outlet and the printer. Turn on the power switch.
Does the **Online** indicator stay on?	Press 【On Line】 so the indicator lights.
Does the **Error** indicator stay red?	Check the error message on the panel display and take the required action.
Is paper loaded?	Load paper into the paper tray or on the bypass tray. See p.9 “Paper and Other Media Supported by This Printer”.
Can you print a configuration page?	If you cannot print a configuration page, it probably indicates a printer malfunction. You should contact your sales or service representative. See "*Printing a Configuration Page*" in Administrator Reference 2.
Is the interface cable connecting the printer to the computer connected securely?	Connect the interface cable properly. If there are any connectors or screws, confirm that they are fastened securely.
Are you using the correct interface cable?	The type of interface cable you should use depends on the computer. Be sure to use the correct one. If the cable is damaged or worn, replace it with a new one. See "*Appendix*" in Administrator Reference 2.

Possible Cause	Solutions
Is the **Data In** indicator blinking or lit after starting the print job?	If not blinking or lit, the data is not being sent to the printer. ❖ **If the printer is connected to the computer using the interface cable** Make sure the printer port settings are correct. For a parallel port connection, port LPT1 or LPT2 should be set. • **Windows 95/98/Me** ① Click **[Start]**, point to **[Settings]**, and then click **[Printers]**. ② Click to select the icon of the printer. Next, on the **[File]** menu, click **[Properties]**. ③ Click the **[Details]** tab. ④ Check the **[Print to the following port]** box to confirm that the correct port is selected. • **Windows 2000** ① Click **[Start]**, point to **[Settings]**, and then click **[Printers]**. ② Click to select the icon of the printer. Next, on the **[File]** menu, click **[Properties]**. ③ Click the **[Port]** tab. ④ Check the **[Print to the following port]** box to confirm that the correct port is selected. • **Windows NT 4.0** ① Click **[Start]**, point to **[Settings]**, and then click **[Printers]**. ② Click to select the icon of the printer. Next, on the **[File]** menu, click **[Properties]**. ③ Click the **[Port]** tab. ④ Check the **[Print to the following port]** box to confirm that the correct port is selected.

Possible Cause	Solutions
Is the **Data In** indicator blinking or lit after starting the print job?	❖ **Network Connection** Contact your network administrator.
When you use IEEE 1394 Interface Unit Type1045	① Confirm that the IEEE 1394 Interface Unit Type1045 is attached to the computer correctly. ② Confirm that the IEEE 1394 interface cable is connected securely. ③ Unplug the IEEE 1394 interface cable which is connected to the printer. ④ Restart the computer. If the error occures even after executing above operation, proceed to the following steps. ⑤ Execute the utility tool for IEEE 1394 Interface Unit Type1045 which is stored in the following path in the CD-ROM labeled "Printer Drivers and Utilities". **UTILITY\1394** **Important** ❒ For details about using the utility tool for IEEE 1394, see the README file in the same directry in the CD-ROM.

Other Printing Problems

Status	Possible Causes, Descriptions, and Solutions
Black gradation is not natural.	• PCL 5c/PostScript Select "CMY+K" for Gray Reproduction in the printer driver's **[Advanced]** dialog box under the **[Print Quality]** tab. • RPCS Select "CMY+K" for Gray Reproduction under the **[Image Adjustments]** tab in the printer driver's **[Change Use Setting]** dialog box.
Color documents are printed in black and white.	The printer driver is not set up for color printing. • PCL 5c/PostScript Select "Color" for the Color/Black and White under the printer driver's **[Setup]** tab. • RPCS Select "Color" for the Color/Black and White under the printer driver's **[Print Settings]** tab. For more information, see the printer driver's Help file.
	Some applications normally print color text as black and white.
Fine dot pattern does not print.	• PCL 5c/PostScript Change **[Dithering]** setting in the Advanced dialog box under the printer driver's **[Print Quality]** tab. • RPCS Change **[Dithering]** setting under the **[Image Adjustments]** tab in the **[Change User Settings]** dialog box under the **[Print Quality]** tab in the printer driver's dialog box. For more information, see the printer driver's Help file.

Status	Possible Causes, Descriptions, and Solutions
Images are cut off, or excess pages are printed.	You might be printing on paper smaller than the paper size selected in the application. Use paper the same size as that selected in the application. If you cannot load paper of the correct size, use the reduction function to reduce the image, and then print. See the printer driver's Help file.
It takes too much time to complete the print job.	Photographs and other data intensive pages take a long time for the printer to process, so simply wait when printing such data. Changing the following settings may help to speed up printing. • PCL 5c Select "600×600 dpi" for Resolution under the **[Print Quality]** tab in the printer driver's dialog box. • PostScript Select "1200×600 dpi" or "600×600 dpi" for Resolution under the **[Print Quality]** tab in the printer driver's dialog box. Select "Post Script(optimize for speed)" for PostScript output format under the **[PostScript]** tab in the printer driver's dialog box. • RPCS Select "1200×600 dpi" or "600×600 dpi" for Resolution under the **[Image Adjustments]** tab in the Change Use Settings dialog box in the printer dialog box. Select "Speed" for Print priority under **[Print Quality]** tab in the printer driver's dialog box. For more information, see the printer driver's Help file.
	The data is so large or complex that it takes time to process it. If the **Data In** indicator is blinking, the data processing is being done. Just wait until it resumes.
	If "Warming Up... " appears on the panel display, the printer is now warming up. Wait for a while.

Status	Possible Causes, Descriptions, and Solutions
It takes too much time to complete the print job.	**Note** ❒ To maintain the best quality, color adjustment is executed regulary during printing or after printing. Even if printing is not specified, color adjustment is sometimes excuted regularly when the power is on.
It takes too much time to resume printing.	The data is so large or complex that it takes time to process it. If the **Data In** indicator is blinking, the data processing is being done. Just wait until it resumes.
	The printer might be set to the Energy Saver mode. In the Energy Saver mode, the printer has to warm up, and this takes time until printing starts. To cancel the Energy Saver mode, select "Off" for "Energy Saver 1" in the System Settings menu.
Multiple pages are fed through the printer at once.	Paper misfeeds easily when the Paper Feed Roller is dirty. Contact your sales or service representative to replace the Paper Feed Roller.
Output are not delivered to the selected tray you require.	When using the bypass tray, the size selected on the display panel might be different from actual paper size. Select the correct paper size. See p.9 “Paper and Other Media Supported by This Printer”.
	When you are using a Windows operating system, the printer driver settings override those set using the operation panel. Set the desired output tray using the printer driver. See the printer driver's Help file.

Status	Possible Causes, Descriptions, and Solutions
Paper misfeeds occur frequently.	Check that the side guide of the Paper Tray is locked. See p.9 “Paper and Other Media Supported by This Printer”. The paper size and feed direction of the paper in the Bypass Tray might not be the same as those you selected with the operation panel. Check the settings on the operation panel, and load paper of the correct paper size and feed direction. See p.9 “Paper and Other Media Supported by This Printer”.
	Check that the paper guide of the Paper Tray is attached properly.
Solid areas, lines or text are shiny or glossy when created as a mixture of cyan, magenta, yellow.	• PCL 5c/PostScript Select "K(Black)" for Gray Reproduction in the printer driver's **[Advanced]** dialog box under the **[Print Quality]** tab. • RPCS Select "K(Black)" for Gray Reproduction under the **[Image Adjustments]** tab in the printer driver's **[Change Use Setting]** dialog box.
Solid lines are printed as broken lines.	• PCL 5c/PostScript Change the **[Dithering]** setting in the Advanced dialog box under the printer driver's **[Print Quality]** tab. • RPCS Change the **[Dithering]** setting under the **[Image Adjustments]** tab in the **[Change User Settings]** dialog box, under the **[Print Quality]** tab in the printer driver's dialog box. For more information, see the printer driver's Help file.
Some parts of the print image are not clear.	Make the image density darker. To adjust the image density, press **【Menu】** on the operation panel, and select Image Density from the Maintenance menu.

Status	Possible Causes, Descriptions, and Solutions
The color of the printout is different from the color on the computer's display.	The toner based color settings with the printer driver causes a drastic change in printout color.
	Changing the color settings with the printer driver causes a drastic change in printout color. See the printer driver's Help file.
The image is printed in the wrong orientation.	The feed direction you selected and the feed direction selected in Option Setup of the printer driver might not be the same. Make the proper settings.
The operation panel error message stays on after removing the misfed paper.	Open the front cover of the printer, and then close it.
The print image is not clear.	Due to a sudden change in temperature, condensation might appear inside the printer, reducing print quality. If this occurs, when you move the printer from a cold room to a warmer room, do not use the printer until it acclimatizes to the temperature.
The print side of the page is a hazy gray.	Adjust the image density. To adjust the image density, press 【Menu】, and select Image Density from the Maintenance menu. See "*Cleaning and Adjusting the Printer*" in Maintenance Guide 1.
	If paper is curled, correct it. Curled or folded paper might cause a hazy gray print. Curling often occurs on postcards, so be sure to correct it before printing.

Status	Possible Causes, Descriptions, and Solutions
The printed image is different from the image on the computer.	When you use some functions, such as enlargement and reduction, the layout of the image might be different from that displayed in the computer display.
	You might have selected to replace True Type fonts with printer fonts in the printing process. To print an image similar to the image on the computer, make the settings to print out True Type fonts as an image. See the printer driver's Help file.
The printer does not print at 1200dpi, even if 1200dpi resolution is selected.	Printing at 1200dpi uses much memory. Therefore, depending on the memory capacity, you may not be able to print at 1200dpi. Either add memory to the printer, or reduce the size of data to be printed. See "*Memory Capacity and Paper Size*" in Administrator Reference 2.
There are color differences in the color documents.	Press **【Menu】**, and select "Color Regist." from the "Maintenance" menu. See "*Cleaning and Adjusting the Printer*" in Maintenance Guide 1.

Note

❒ If the problem cannot be solved, contact your sales or service representative.

Removing Misfed Paper

If a paper misfeed occurs, an error message appears indicating the location of the misfed paper on the panel display. This printer has the auto-recovery function, by which misfed paper is sent to the Standard Tray or Right Cover. Usually, you can remove the misfed paper easily with this function.

Detaching the 2 Tray Finisher

There are times when you might have to detach the 2 Tray Finisher from the printer to remove misfed paper. This section describes how to detach the 2 Tray Finisher.

1 **Hold the handle at the top of the 2 Tray Finisher firmly with one hand, pull the 2 Tray Finisher straight out, and let go when it stops.**

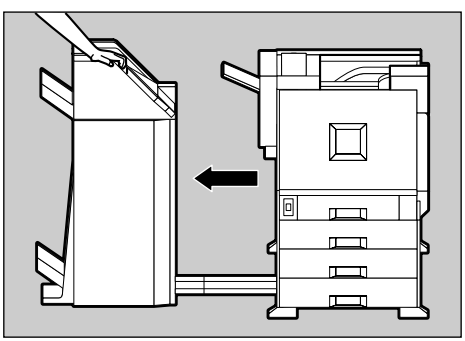

ZDJP201J

The 2 Tray Finisher is detached from the printer.

2 **Use both hands to push it straight back in, and let go when it clicks into place.**

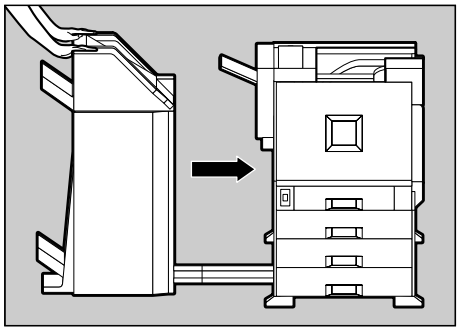

ZDJP202J

The 2 Tray Finisher is reattached to the printer.

Important

- ❒ Attach the 2 Tray Finisher to the printer after closing the Duplex Reversal Unit.

Opening and Closing the Duplex Reversal Unit

There are times when you might have to detach the Duplex Reversal Unit to remove misfed paper. This section describes how to detach the Duplex Reversal Unit.

1 **Push up the lock release button and keep it in place.**

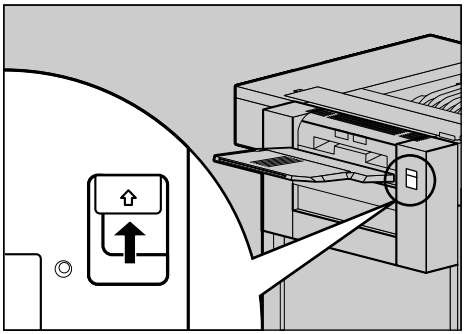

ZDJP203J

2 **Lower the Duplex Reversal Unit slowly until it stops.**

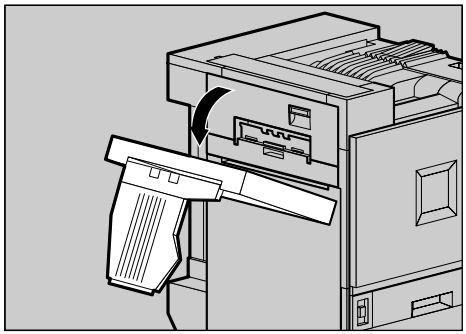

ZDJP204J

Important

- ❒ Open the Duplex Reversal Unit after detaching the 2 Tray Finisher from the printer.

Note

- ❒ You do not have to remove the outupt tray even if the 2 Tray Finisher is attached.

The Duplex Reversal Unit is opened.

3 **Raise the Duplex Reversal Unit slowly with both hands, and push it in until it clicks into place.**

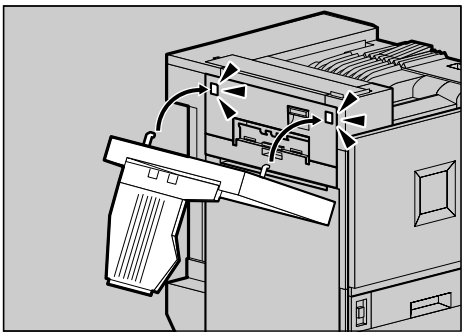

ZDJP205J

The Duplex Reversal Unit is closed.

Important

- ❒ Attach the Duplex Reversal Unit after closing the upper left cover for the printer.

When "Remove Misfeed A:Internal Path" Appears

1 **Open the right cover.**

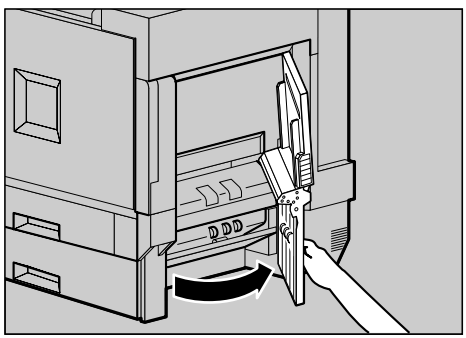

ZDJH206J

2 **Move the blue lever up and down to feed the misfed paper, and then pull out the paper slowly.**

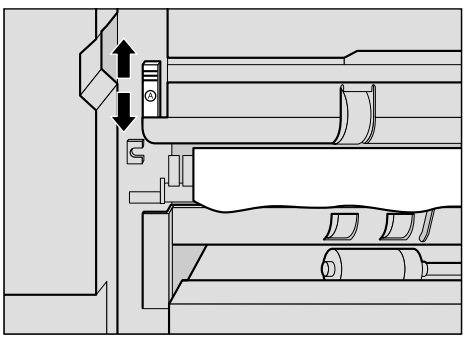

ZDJY205J

3 **Close the right cover by pushing the area labeled "PUSH".**

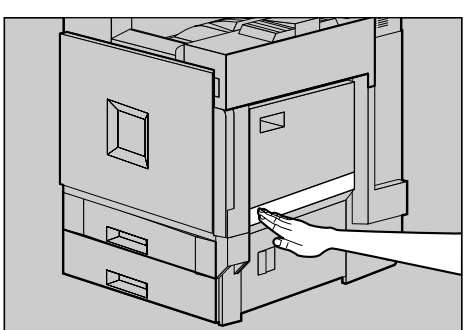

ZDJP708J

When "Remove Misfeed B: Fusing Unit" Appears

⚠ ***CAUTION:***

- *The inside of the machine becomes very hot. Do not touch the parts with a label indicating a "hot surface". Touching a "hot surface" could result in a burn.*

1 **If the 2 Tray Finisher is installed, detach it from the printer.**

Reference

❒ ⇒ p.71 “Detaching the 2 Tray Finisher”

2 **If the Duplex Unit is installed, open the Duplex Reversal Unit.**

Reference

❒ ⇒ p.72 “Opening and Closing the Duplex Reversal Unit”

3 **If the output tray is attached to the printer, raise it in the direction of the arrow (①), and remove it (②).**

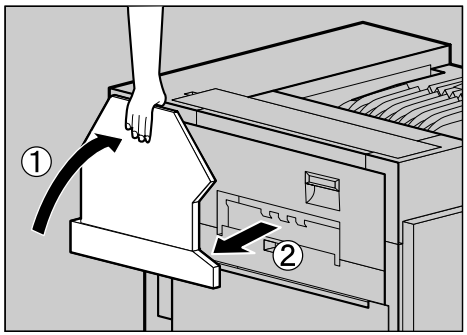

ZDJP038J

4 **Pull out the upper left cover for the printer slowly.**

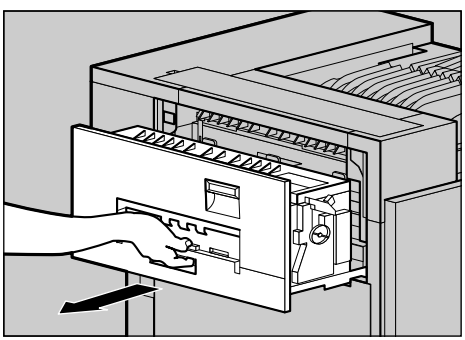

ZDJH047J

5 **Open the upper left cover.**

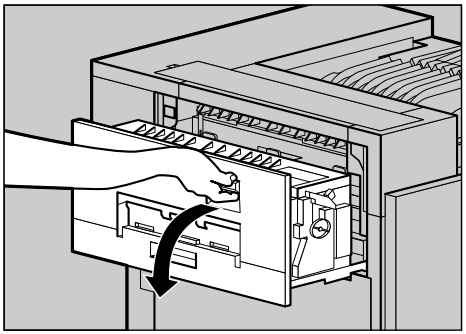

ZDJH048J

6 **Turn the blue dial in the direction of the arrow to feed the misfed paper, and pull out the paper slowly.**

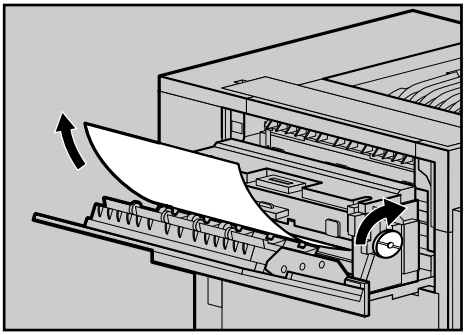

ZDJY206J

Important

- ❒ Always turn the blue dial in the direction of the arrow. If you turn it in the reverse direction, the paper feeds into the printer, making it difficult for you to take out the paper.
- ❒ Do not pull out the misfed paper. Use the blue dial to feed misfed paper.

7 **Close the upper left cover (①) and push the handle slowly to the back until it clicks into place (②).**

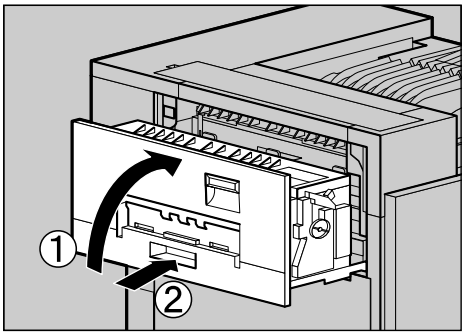

ZDJH051J

8 If you removed the output tray in step **3**, reattach it to the printer. Insert the hooks of the output tray into the printer slits, and lower it toward you.

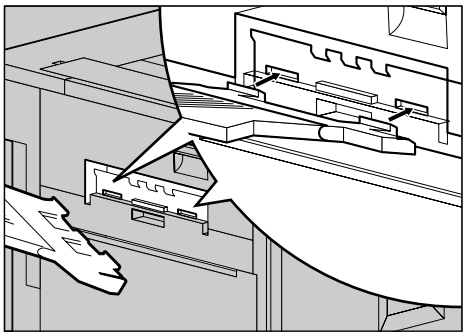

ZDJH010J

9 If the Duplex Unit is installed, close the Duplex Reversal Unit.

Reference

- ⇒ p.72 “Opening and Closing the Duplex Reversal Unit”

10 If the 2 Tray Finisher was installed, reattach the 2 Tray Finisher to the printer.

Reference

- ⇒ p.71 “Detaching the 2 Tray Finisher”

When "Remove Misfeed W: Mailbox" Appears

1 Open the Mailbox Cover slowly (①), pull out the misfed paper slowly (②).

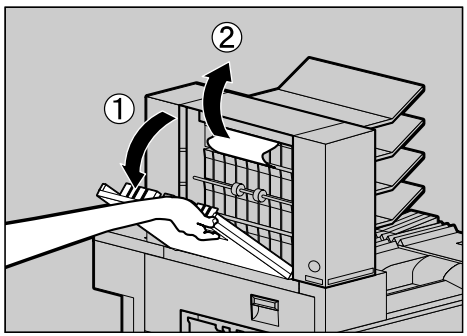

ZDJY207J

2 Close the Mailbox Cover.

When "Remove Misfeed R: Finisher" Appears

Open the top cover (①) and front cover (②) of the 2 Tray Finisher, and remove the misfed paper.

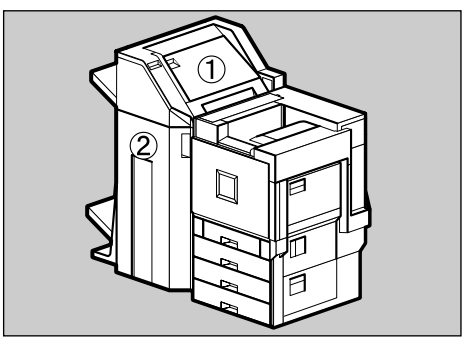

ZDJP206J

1 **Fold the Output Tray.**

❶ **Raise it vertically.**

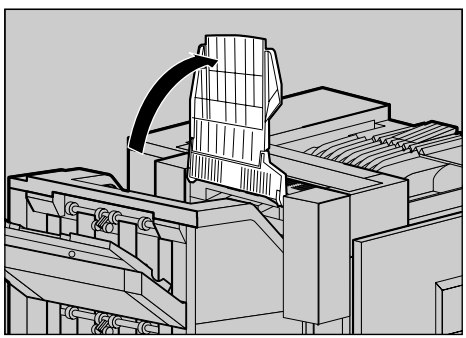

ZDJP207J

❷ **Fold it along the printer body.**

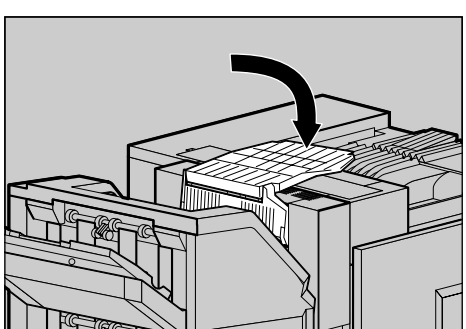

ZDJP208J

2 **Open the top cover for the 2 Tray Finisher, and pull out the misfed paper slowly.**

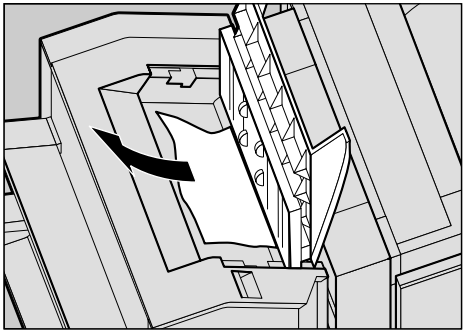

ZDJY208J

3 **Close the top cover slowly.**

4 **Open the front cover for the 2 Tray Finisher.**

Check to see if there is a misfed paper in areas A, B, C, and D.

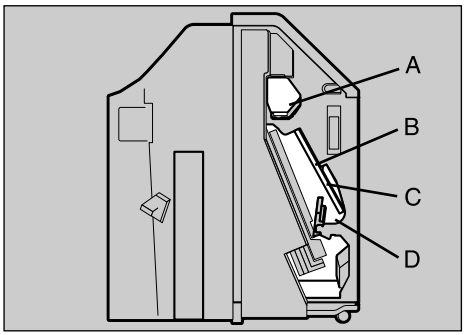

ZDJP209J

5 **Check area A of step 4. Lift the lever (①), and while supporting it with your hand not to lower, pull out the misfed paper slowly.**

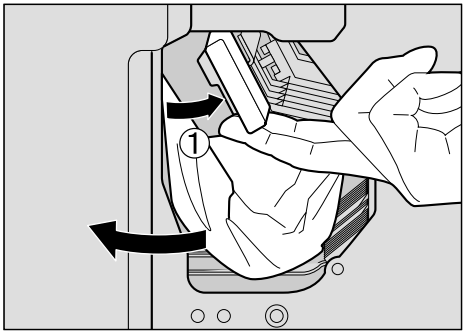

ZDJP210J

6 **Lower the lever slowly to return it into place.**

7 **Check areas B and C of step 4. Lower the lever in the direction of the arrows (①), and pull out the misfed paper slowly.**

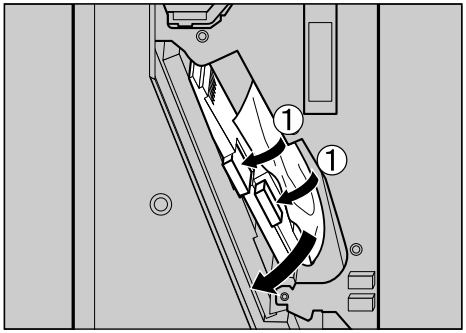

ZDJP211J

8 **Lift the lever slowly to return it into place.**

9 **Check area D of step 4. Lift the lever in the direction of the arrow (①), and pull out the misfed paper slowly.**

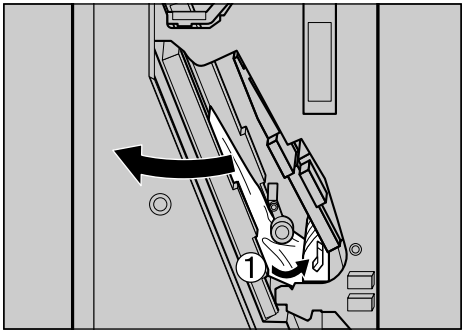

ZDJP212J

10 **Lower the lever slowly to return it into place.**

11 **Close the front cover for the 2 Tray Finisher.**

If the error message does not clear even after the misfed paper is removed, detach the 2 Tray Finisher from the printer to check for the misfed paper there.

Reference

❒ See p.71 “Detaching the 2 Tray Finisher” for details about how to detach/reattach the 2 Tray Finisher from/to the printer.

12 **Return the Output Tray back into place.**

❶ **Raise the tray.**

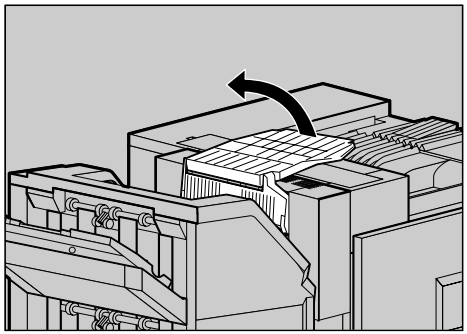

ZDJP085J

❷ **Lower it slowly.**

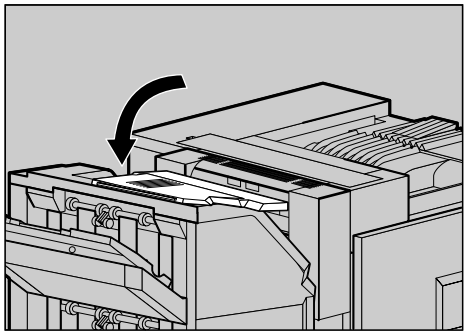

ZDJP086J

When "Remove Misfeed Y: Paper Tray" Appears

1 **Open the Lower Right cover for the Paper Feed Unit, and pull out the misfed paper.**

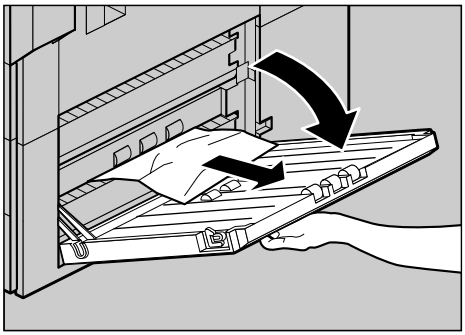

ZDJY209J

2 **Close the Lower Right cover for the Paper Feed Unit.**

When "Remove Misfeed Z1: Duplex Unit" Appears

⚠ ***CAUTION:***

- *The inside of the machine becomes very hot. Do not touch the parts with a label indicating a "hot surface". Touching a "hot surface" could result in a burn.*

1 **If the 2 Tray Finisher is installed, detach it from the printer.**

Reference

❒ ⇒ p.71 “Detaching the 2 Tray Finisher”

2 **Open the left cover for the Duplex Reversal Unit, and remove the misfed paper. Do not pull the paper out by force.**

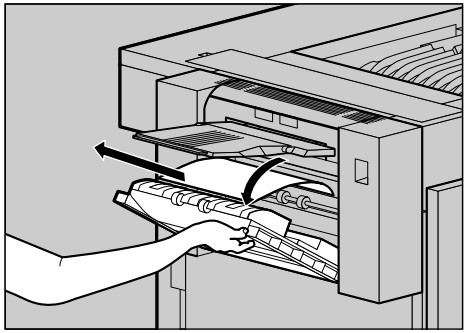

If you cannot remove the paper, proceed to step **3**.

3 **Push up the lock release button for the Duplex Reversal Unit, and then hold it in place.**

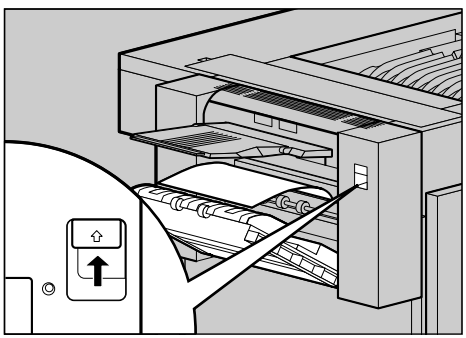

ZDJY211J

4 **Lower the Duplex Reversal Unit slowly until it stops, and remove the misfed paper.**

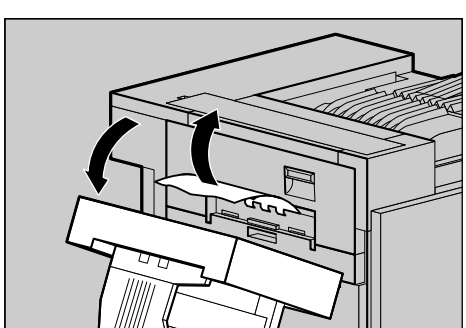

ZDJY212J

5 **Raise the Duplex Reversal Unit slowly and insert until it clicks into place. Raise the left cover, and close it securely by pushing the area labeled "PUSH".**

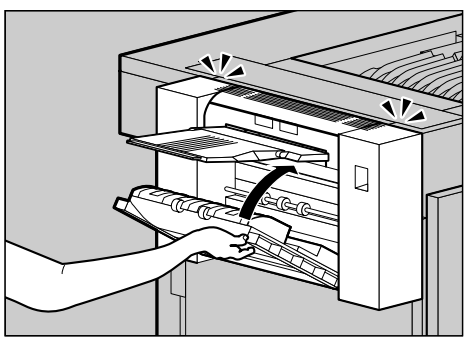

ZDJH207J

Removing Jammed Staples

When "Add Staples " appears on the panel display, or when the printer does not staple even after it is instructed to, the staples might be jammed.

```
Add Staples
```

1 Open the front cover for the 2 Tray Finisher.

The stapler is attached to the position shown in the illustration.

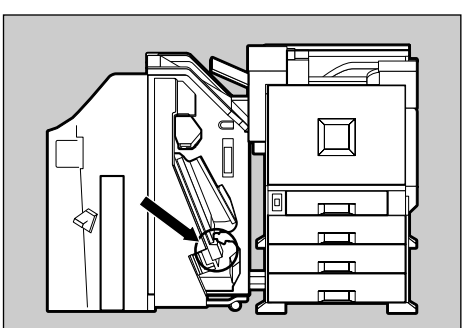

ZDJP216J

2 Remove the cartridge by pulling the green knob in the direction of the arrow.

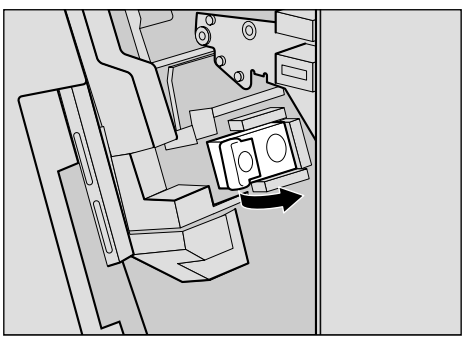

ZDJP217J

3 **Open the face plate of the cartridge to unlock it.**

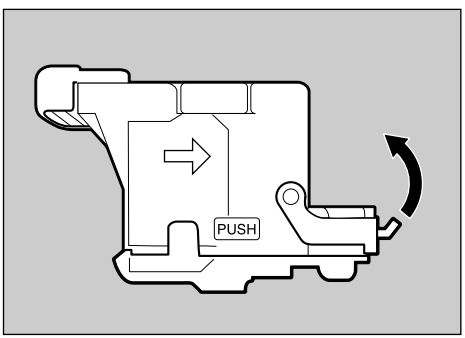

ZDJP227J

4 **Remove the jammed staples.**

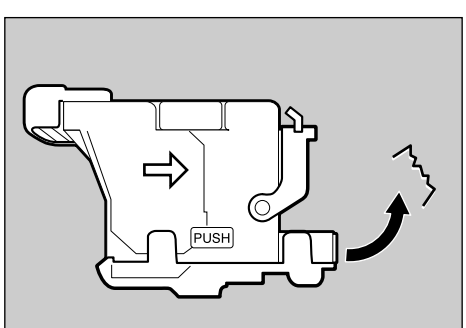

ZDJP228J

5 **Close the face plate of the cartridge until it clicks into place.**

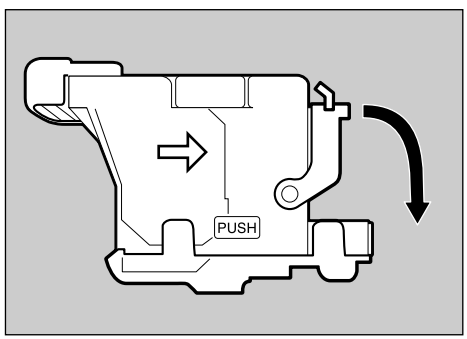

ZDJP229J

6 **Slant and insert the cartridge (①), and push in until it clicks into place (②).**

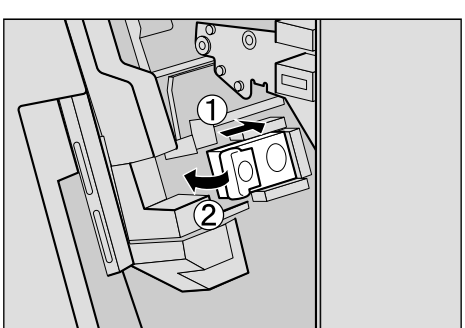

ZDJP218J

7 **Close the front cover for the 2 Tray Finisher.**

Adding Staples

When "Add Staples " appears on the panel display, add a new staple refill.

```
Add Staples
```

1 Open the front cover for the 2 Tray Finisher.

The stapler is attached to the position shown in the illustration.

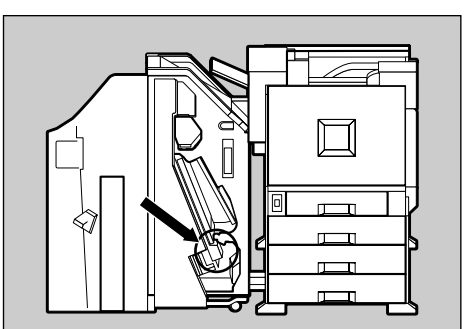

ZDJP216J

2 Remove the cartridge by pulling the green knob in the direction of the arrow.

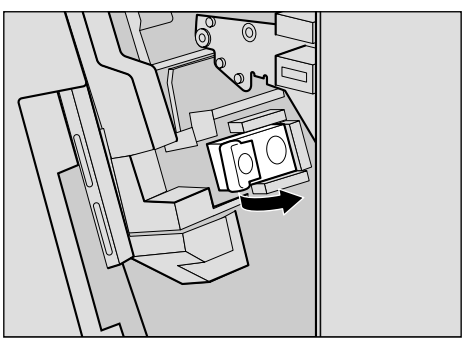

ZDJP217J

3 **Push the areas labeled "PUSH", located on both sides of the stapler.**

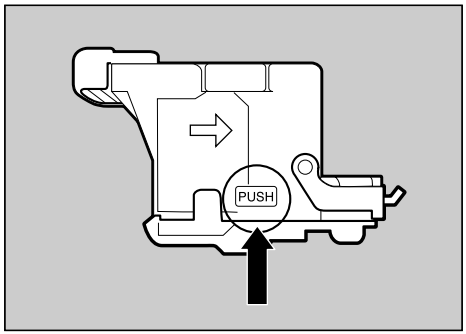

ZDJP222J

The case cover at top floats up.

4 **Pull the case cover up.**

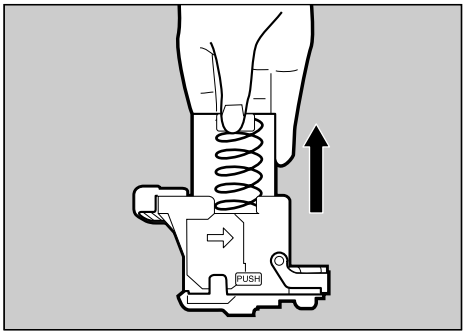

ZDJP223J

5 **Hook your finger in the hole of the empty refill case to pull it out.**

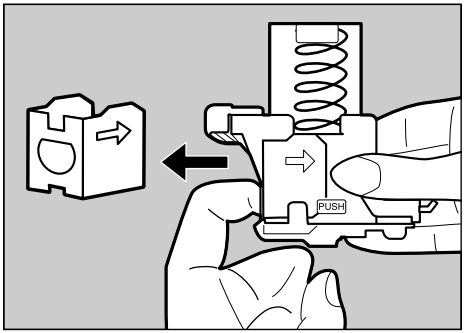

ZDJP224J

6 **Insert the new refill case in the direction of the arrow until it clicks into place.**

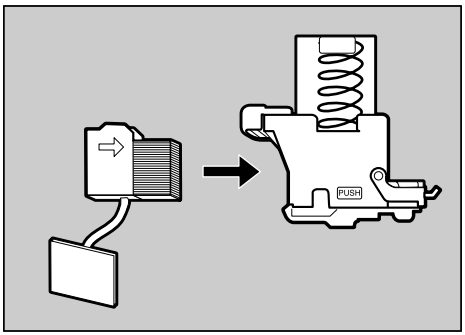

ZDJP225J

7 **Push the case cover down until it clicks into place.**

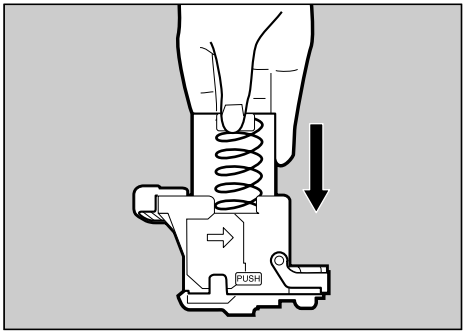

ZDJP230J

8 **Pull out the ribbon used for bundling the staples.**

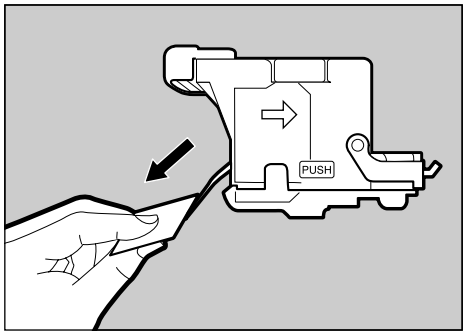

ZDJP226J

Note

❒ Remove the entire length of the ribbon.

9 **Slant and insert the cartridge (①), and push in until it clicks into place (②).**

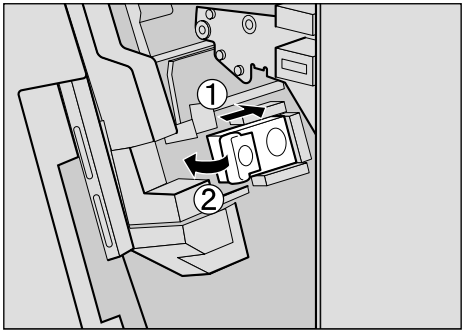

ZDJP218J

10 **Close the front cover for the 2 Tray Finisher.**

Removing Punch-hole Chips

When "Punch-hole Chips are Full" appears on the panel display, the punch waste box is full. Follow these steps to remove paper chips.

Note

- ❒ Same message appears when the punch waste box is not installed correctly.

```
Punch-hole Chips
are Full
```

1 Open the front cover for the 2 Tray Finisher.

The punch waste box is attached to the position shown in the illustration.

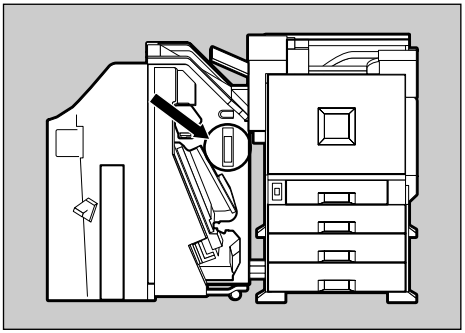

ZDJP219J

2 Pull out the punch waste box and remove the paper chips.

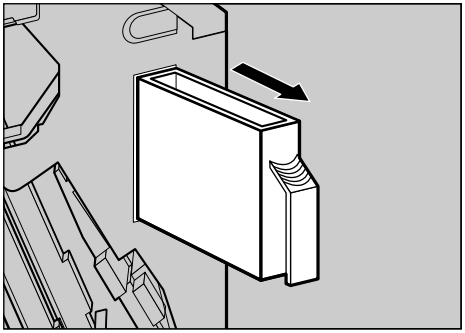

ZDJP220J

3 Re-install the punch waste box.

4 Close the front cover for the 2 Tray Finisher.

When the message appears even after removing the Punch-hole chips

When the "Punch-hole Chips are Full" message appears on the control panel even the punch waste box is not full, punch-hole chips might be stuck around the punch waste box hole as shown in the illustration. Remove the punch-hole chips around the hole.

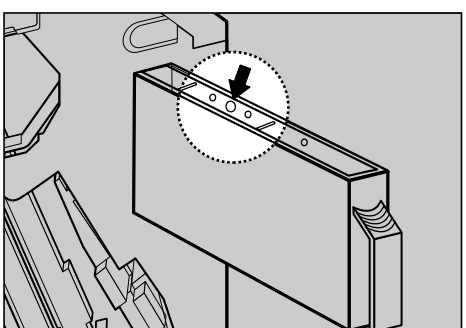

ZBGH030N

INDEX

A

Adding Staples, 86

B

Bypass Tray
Custom Size, 40
Paper Type, 41

D

Data In indicator, 63, 64
Detaching the 2 Tray Finisher, 71
Display panel, messages, 44

E

Energy Star, 5
Envelopes, 24
Error, 44
Error indicator, 62

L

Loading Paper, 21, 28
Optional Paper Feed Unit, 29
Tray 1, 28
Tray 2, 29
Loading paper
Bypass Tray, 37
Paper Bank PS470, 32
paper size, 33
paper type, 35

M

messages, 44

O

OHP transparencies, 23
Online indicator, 62
Online key, 62
Opening and Closing the Duplex Reversal Unit, 72
Other Printing Problems, 65

P

Paper and Other Media, 9
Paper Size, 9
Plain Paper, 22
Printable Area, 27
Printer Does Not Print, 62

R

Remove Misfed Paper
Duplex Unit, 82
Finisher, 78
Fusing Unit, 75
Internal Path, 74
Mailbox, 77
Paper Tray, 81
Removing Jammed Staples, 84
Removing Misfed Paper, 71
Removing Punch-hole Chips, 89

S

Storing Paper, 21

T

Thick Paper, 22
Troubleshooting, 44

Copyright © 2001

Operating Instructions

Administrator Reference 1

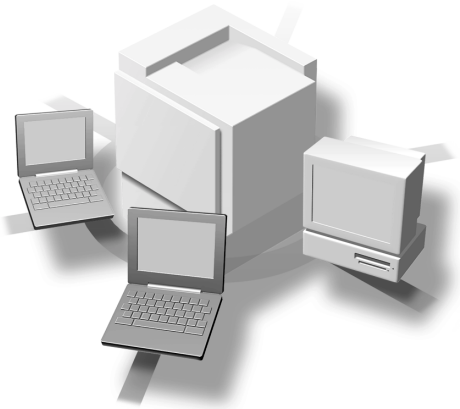

Read this manual carefully before you use this product and keep it handy for future reference.
For safety, please follow the instructions in this manual.

Introduction

This manual contains detailed instructions on the operation and maintenance of this machine. To get maximum versatility from this machine all operators should carefully read and follow the instructions in this manual. Please keep this manual in a handy place near the machine.

Please read the Safety Information before using this machine. It contains important information related to USER SAFETY and PREVENTING EQUIPMENT PROBLEMS.

Trademarks

Microsoft®, Windows®, and Windows NT® are registered trademarks of Microsoft Corporation in the United States and/or other countries.

AppleTalk, Apple, Macintosh are registered trademarks of Apple Computer, Incorporated.

IPS-PRINT™ Printer Language Emulation© Copyright 1999-2000, XIONICS DOCUMENT TECHNOLOGIES, INC., All Rights Reserved.

Other product names used herein are for identification purposes only and might be trademarks of their respective companies. We disclaim any and all rights involved with those marks.

Notes:

Some illustrations might be slightly different from your machine.

Certain options might not be available in some countries. For details, please contact your local dealer.

Note

The proper names of the Windows operating systems are as follows:

- Microsoft® Windows® 95 operating system
- Microsoft® Windows® 98 operating system
- Microsoft® Windows® Millennium Edition (Windows Me)
- Microsoft® Windows® 2000 Professional
- Microsoft® Windows® 2000 Server
- Microsoft® Windows NT® Server operating system Version 4.0
- Microsoft® Windows NT® Workstation operating system Version 4.0

How to Read This Manual

Symbols

In this manual, the following symbols are used:

⚠ ***WARNING:***
This symbol indicates a potentially hazardous situation which, if instructions are not followed, could result in death or serious injury.

⚠ ***CAUTION:***
This symbol indicates a potentially hazardous situation which, if instructions are not followed, may result in minor or moderate injury or damage to property.

* The statements above are notes for your safety.

Important
If this instruction is not followed, paper might be misfed, originals might be damaged, or data might be lost. Be sure to read this.

Preparation
This symbol indicates the prior knowledge or preparations required before operating.

Note
This symbol indicates precautions for operation, or actions to take after misoperation.

Limitation
This symbol indicates numerical limits, functions that cannot be used together, or conditions in which a particular function cannot be used.

Reference
This symbol indicates a reference.

[ ]
Keys that appear on the machine's panel display.

Keys and buttons that appear on the computer's display.

【 】
Keys built into the machine's operation panel.

Keys on the computer's keyboard.

TABLE OF CONTENTS

1. Setup Guide for each Network Environment

Print with a Print Server **1**
Printing with a Windows 2000 or Windows NT 4.0 Print server 1
Printing with a NetWare Print Server **2**
Configuring the Printer as a Print Server 2
Configuring the Printer as a Remote Printer 3
Printing without Using a Print Server **4**

2. Configuring the Printer for the Network

Configuring the Printer for the Network with the Operation Panel **5**

3. Appendix

Information about Installed Software **11**
expat 11
NetBSD 12

INDEX **14**

1. Setup Guide for each Network Environment

Print with a Print Server

Printing with a Windows 2000 or Windows NT 4.0 Print server

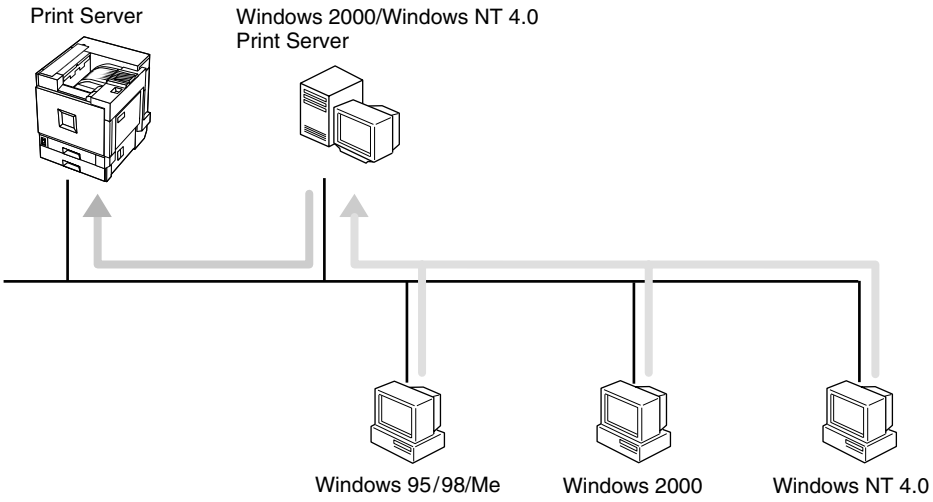

1 Choose a protocol for the printer and print server.

2 Configure a protocol you want to use with the operation panel.

⇒ P.5 *"Configuring the Printer for the Network with the Operation Panel"*

3 Configure the printer.

⇒ "Windows 2000 Configuration" and "Windows NT 4.0 Configuration" in Administrator Reference 2.

4 Install the printer driver and SmartNetMonitor for Client.

⇒ "Windows 2000 Configuration" and "Windows NT 4.0 Configuration" in Administrator Reference 2.

5 Share the printer.

⇒ "Windows 2000 Configuration" and "Windows NT 4.0 Configuration" in Administrator Reference 2.

Printing with a NetWare Print Server

Set up a network printer in a NetWare environment.

For more information about setting up the clients, see "*NetWare Configuration*" in Administrator Reference 2.

Configuring the Printer as a Print Server

A dedicated NetWare print server is not required because the printer can be configured as a print server.

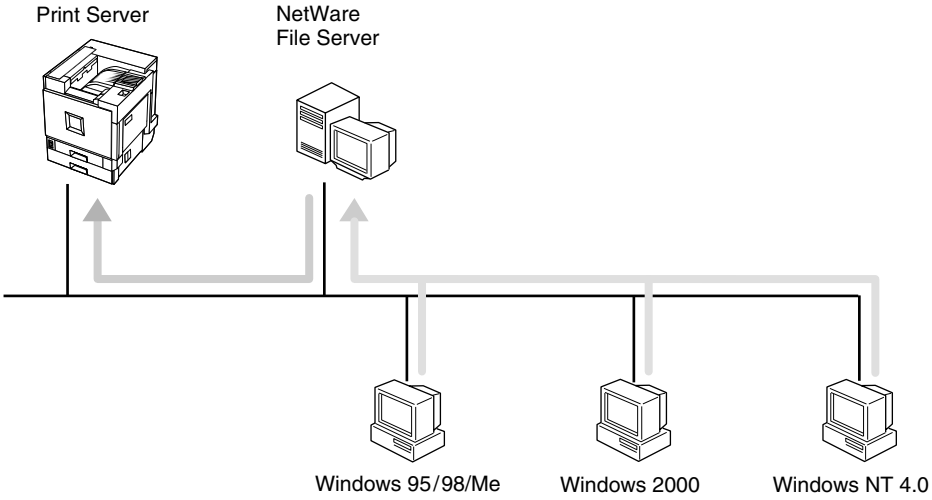

1 Configure the printer for NetWare with the operation panel.

2 Configure NetWare. The procedure may differ depending on the NetWare version.

⇒ "NetWare Configuration" in Administrator Reference 2.

Configuring the Printer as a Remote Printer

If a dedicated NetWare print server is being used, the printer should be configured as a remote printer.

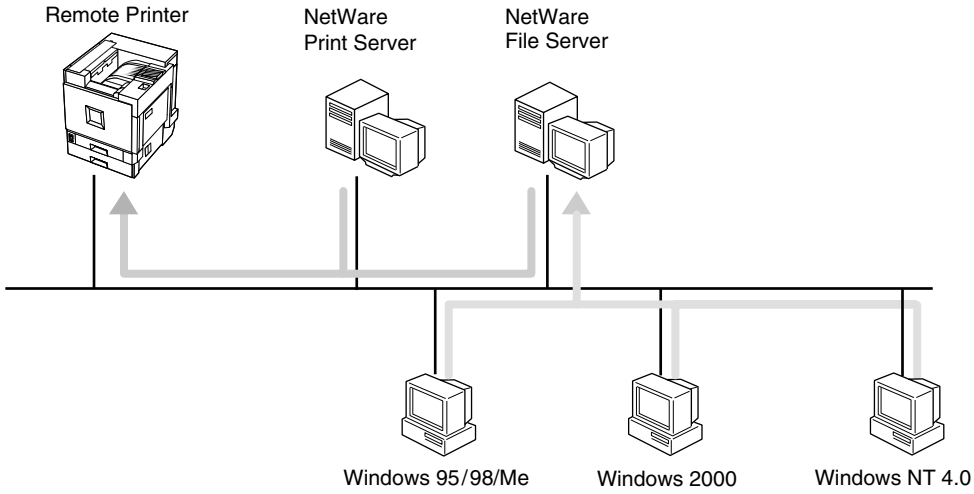

1 Configure the printer for NetWare with the operation panel.

2 Configure NetWare. The procedure may differ depending on the NetWare version.

⇒ "NetWare Configuration" in Administrator Reference 2.

Printing without Using a Print Server

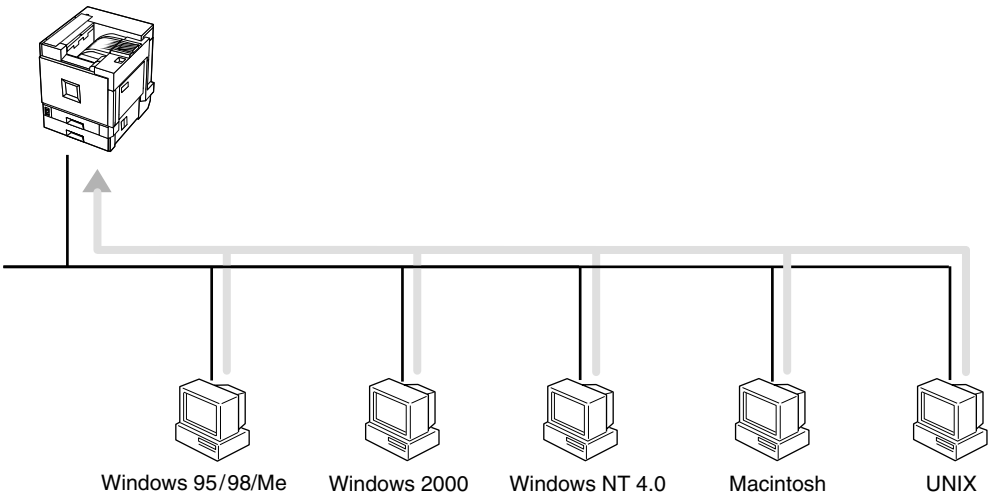

1 Choose a protocol for the printer and print server.

2 Configure a protocol you want to use with the operation panel.

⇒ P.5 *"Configuring the Printer for the Network with the Operation Panel"*

Configuring the Printer for the Network with the Operation Panel

Configure the Network Interface Board for the network using the operation panel.

Configure the printer for the network using the operation panel.

The following table shows the operation panel settings and their default settings. These are included in the "Host Interface" menu.

Reference

For information about the "Host Interface" menu, see "*Host Interface Menu*" in Administrator Reference 2 provided as a PDF file on the CD-ROM labeled "Operating Instructions".

Setting Name	Value	
IP Address	000.000.000.000	
Subnet Mask	000.000.000.000	
Gateway Address	000.000.000.000	
Access Control (Access Control Address)	000.000.000.000	
Access Mask (Access Control Mask)	000.000.000.000	
Network Boot	None	
Frame Type (NW) (Frame type NetWare)	Auto	
Active Protocol	TCP/IP	❍ *1
	NetWare	❍ *1
	NetBEUI	❍ *1
	AppleTalk	❍ *1
Ethernet	Auto	

*1 ❍ means that this protocol is active.

1 Press [Menu].

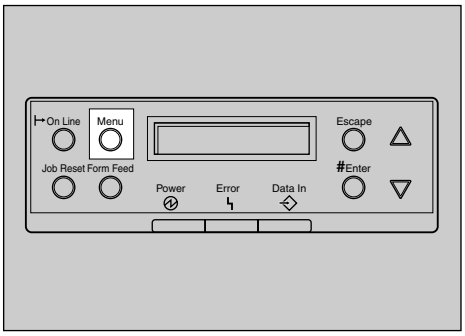

ZDJS001N

"Menu" appears on the panel display.

2 Press [▲] or [▼] to display "Host Interface".

```
Menu:
 Host Interface
```

3 Press [Enter].

The following message appears on the panel display.

```
Host Interface:
 I/O Buffer
```

4 Press [▲] or [▼] to display "Network Setup".

```
Host Interface:
 Network Setup
```

5 Press 【Enter】.

The following message appears on the panel display.

```
Network Setup:
 IP Address
```

2

6 Select the protocol you want to use.

Note

❒ Do not select protocols that are not used on your network.

❶ **Press 【▲】 or 【▼】 to display "Active Protocol".**

```
Active Protocol:
 TCP/IP
```

❷ **Press 【Enter】.**

The current setting appears on the panel display.

```
TCP/IP:
*Active
```

❸ **Press 【▲】 or 【▼】 to display the protocol you want to use.**

❹ **Press 【Enter】.**

The actual procedure may differ depending on the protocol you use. Follow the appropriate procedure.

TCP/IP	7▶8▶9▶10▶12
NetWare	11▶12
AppleTalk	12
NetBEUI	12

7 If you use TCP/IP, you should assign the IP address to the printer.

Note

❒ Contact your network administrator to get the IP address for the printer.

❶ **Press 【▲】 or 【▼】 until the following message appears.**

```
Network Setup:
 IP Address
```

❷ **Press 【Enter】.**

The current IP address appears on the panel display.

```
IP Address:
  0.  0.  0.  0
```

❸ **Press 【▲】 or 【▼】 to enter the leftmost entry field of the IP address.**

```
IP Address:
 11.  0.  0.  0
```

❹ **Press 【Enter】.**

The pointer (▓) moves to the next entry field automatically.

```
IP Address:
 11.  ▓.  0.  0
```

Note

❒ You can return the pointer (▓) to the previous (left) entry field by pressing 【Escape】.

❒ If you press 【Escape】 when the pointer (▓) is on the leftmost position, the selected IP address is reset.

❺ **Repeat steps ❸ and ❹ to enter the IP address.**

```
TCP/IP:
 11. 22. 33. 44
```

Check if the pointer (▒) is at the rightmost position, and then press 【Enter】 to register the IP Address you selected.

```
Network Setup:
 IP Address
```

8 If you use TCP/IP, you should assign "Subnet Mask" and "Gateway Address" following the same procedure for entering the IP address.

9 If you use TCP/IP, set the "Access Control" and "Access Mask" following the same procedure for entering the IP address, if necessary.

10 If you use DHCP in TCP/IP, you can make settings for "Network Boot".

You can select how to assign the printer's address using the computer. Select one of the items below.

- None (Default)
- DHCP

❶ **Press 【▲】 or 【▼】 to display "Network Boot".**

```
Network Setup:
 Network Boot
```

❷ **Press 【Enter】.**

The current setting appears on the panel display.

```
Network Boot:
*None
```

❸ **Press 【▲】 or 【▼】 to display the method you want to use.**

❹ **Press 【Enter】.**

2

2

11 If you use NetWare, select the frame type for NetWare.

Select one of items below if necessary.

- Auto (Default)
- Ethernet 802.3
- Ethernet 802.2
- Ethernet ll
- Ethernet SNAP

Note

❒ In most situations, use the default setting ("Auto"). When if you first select "Auto", the frame type first detected by the printer is adopted. If the network can use more than two frame types, the printer may fail to select the correct frame type if "Auto" is selected. In this case, select the appropriate frame type.

❶ **Press 【▲】 or 【▼】 to display "Frame Type (NW)".**

```
Network Setup:
 Frame Type (NW)
```

❷ **Press 【Enter】.**

The current setting appears on the panel display.

```
Frame Type (NW):
*Auto
```

❸ **Press 【▲】 or 【▼】 to display the frame type you want to use.**

❹ **Press 【Enter】.**

12 Reset the printer to apply the settings.

❶ **Press 【On Line】 to enter the "Offline" condition.**

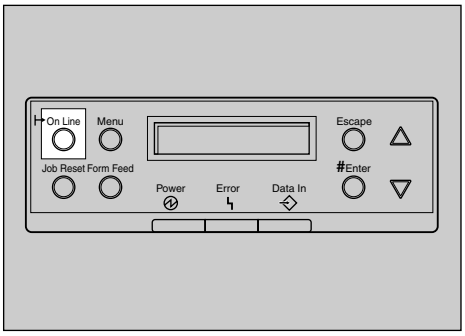

ZDJS022N

The **Online** indicator turns off.

❷ **Press 【Job Reset】.**

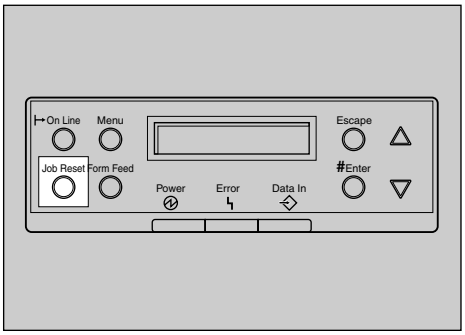

ZDJS023N

13 Print the configuration page to check settings you have made.

❶ **Press 【Menu】.**

❷ **Press 【▲】 or 【▼】 to display "List/Test Print".**

❸ **After confirming that "Config. Page" is on the display, press 【Enter】.**

❹ **Press 【Enter】.**

The configuration page is now printed. Check the contents of the configuration page.

❺ **Press 【On Line】.**

"Ready " appears on the panel display.

```
Ready
```

Address

❖ Subnet Mask

A number used to mathematically "mask" or hide an IP address on the network by eliminating those parts of the address that are alike for all the machines on the network.

❖ Gateway Address

A gateway is a connection or interchange point that connects two networks. A gateway address is for the router or host computer used as a gateway.

Note

❒ Contact your network administrator to get the addresses.

❖ Access Control Address and Access Control Mask

The Access Control Address and Access Control Mask are used in combination with the client's IP addresses that have access to the computer used for printing. If it is not necessary for you to control the access rights, select "0.0.0.0".

Note

❒ When the Access Control Address settings coincide with the masked result of the IP address of the computer, print jobs from that IP address can be accepted by the Network Interface Board.

❒ For example, if you assign 192.168.15.16 as the Access Control Address to the Network Interface Board, the combination of the Access Control Mask and IP address that can have access are as follows: (xxx : for any numerical value)

Access Control Mask	IP Addresses that have access
000.000.000.000	xxx.xxx.xxx.xxx
255.000.000.000	192.xxx.xxx.xxx
255.255.000.000	192.168.xxx.xxx
255.255.255.000	192.168. 15.xxx
255.255.255.255	192.168. 15. 16

3. Appendix

Information about Installed Software

expat

Expat(Version 1.1). Copyright 1998, 1999 James Clark. All rights reserved.

- The software installed on this product includes the expat application software Version 1.1 (hereinafter "expat 1.1").
- The product manufacturer has not made any modification to the source code of the expat 1.1.
- The product manufacturer provides warranty and support to the software of the product including the expat 1.1 and the product manufacturer makes Mr. James Clark, the initial developer of the expat 1.1, free from these obligations.
- The expat 1.1 is made available under Mozilla Public License Version 1.1 (hereinafter "MPL 1.1"), and controller software of the product equals the Larger Work as defined in MPL 1.1. The software of this product except the expat 1.1 is licensed to the product manufacturer under separate agreement(s).
- The source code of the expat 1.1 is available at:
  ftp://ftp.jclark.com/pub/xml/expat1_1.zip
- MPL 1.1 is also available at:
  http://www.mozilla.org/MPL/MPL-1.1.html
- Information relating to the expat 1.1 is available at:
  http://www.jclark.com/xml/expat.html

NetBSD

Copyright Notice of NetBSD

For all users to use this product:

This product contains NetBSD operating system:

For the most part, the software constituting the NetBSD operating system is not in the public domain; its authors retain their copyright.

The following text shows the copyright notice used for many of the NetBSD source code. For exact copyright notice applicable for each of the files/binaries, the source code tree must be consulted.

A full source code can be found at http://www.netbsd.org/.

Copyright © 1999, 2000 The NetBSD Foundation, Inc.

All rights reserved.

Redistribution and use in source and binary forms, with or without modification, are permitted provided that the following conditions are met:

① Redistributions of source code must retain the above copyright notice, this list of conditions and the following disclaimer.

② Redistributions in binary form must reproduce the above copyright notice, this list of conditions and the following disclaimer in the documentation and/or other materials provided with the distribution.

③ All advertising materials mentioning features or use of this software must display the following acknowledgement:
This product includes software developed by the NetBSD Foundation, Inc. and its contributors.

④ Neither the name of The NetBSD Foundation nor the names of its contributors may be used to endorse or promote products derived from this software without specific prior written permission.

THIS SOFTWARE IS PROVIDED BY THE NETBSD FOUNDATION, INC. AND CONTRIBUTORS "AS IS" AND ANY EXPRESS OR IMPLIED WARRANTIES, INCLUDING, BUT NOT LIMITED TO, THE IMPLIED WARRANTIES OF MERCHANTABILITY AND FITNESS FOR A PARTICULAR PURPOSE ARE DISCLAIMED. IN NO EVENT SHALL THE FOUNDATION OR CONTRIBUTORS BE LIABLE FOR ANY DIRECT, INDIRECT, INCIDENTAL, SPECIAL, EXEMPLARY, OR CONSEQUENTIAL DAMAGES (INCLUDING, BUT NOT LIMITED TO, PROCUREMENT OF SUBSTITUTE GOODS OR SERVICES; LOSS OF USE, DATA, OR PROFITS; OR BUSINESS INTERRUPTION) HOWEVER CAUSED AND ON ANY THEORY OF LIABILITY, WHETHER IN CONTRACT, STRICT LIABILITY, OR TORT (INCLUDING NEGLIGENCE OR OTHERWISE) ARISING IN ANY WAY OUT OF THE USE OF THIS SOFTWARE, EVEN IF ADVISED OF THE POSSIBILITY OF SUCH DAMAGE.

Authors Name List

All product names mentioned herein are trademarks of their respective owners.

The following notices are required to satisfy the license terms of the software that we have mentioned in this document:

- This product includes software developed by the University of California, Berkeley and its contributors.
- This product includes software developed by Jonathan R. Stone for the NetBSD Project.
- This product includes software developed by the NetBSD Foundation, Inc. and its contributors.
- This product includes software developed by Manuel Bouyer.
- This product includes software developed by Charles Hannum.
- This product includes software developed by Charles M. Hannum.
- This product includes software developed by Christopher G. Demetriou.
- This product includes software developed by TooLs GmbH.
- This product includes software developed by Terrence R. Lambert.
- This product includes software developed by Adam Glass and Charles Hannum.
- This product includes software developed by Theo de Raadt.
- This product includes software developed by Jonathan Stone and Jason R. Thorpe for the NetBSD Project.
- This product includes software developed by the University of California, Lawrence Berkeley Laboratory and its contributors.
- This product includes software developed by Christos Zoulas.
- This product includes software developed by Christopher G. Demetriou for the NetBSD Project.
- This product includes software developed by Paul Kranenburg.
- This product includes software developed by Adam Glass.
- This product includes software developed by Jonathan Stone.
- This product includes software developed by Jonathan Stone for the NetBSD Project.
- This product includes software developed by Winning Strategies, Inc.
- This product includes software developed by Frank van der Linden for the NetBSD Project.
- This product includes software developed for the NetBSD Project by Frank van der Linden
- This product includes software developed for the NetBSD Project by Jason R. Thorpe.
- The software was developed by the University of California, Berkeley.
- This product includes software developed by Chris Provenzano, the University of California, Berkeley, and contributors.

INDEX

A

Access Control Address, 5, 9
Access Control Mask, 5, 9
Address, 9

E

Ethernet, 5

F

Frame type NetWare, 5

G

Gateway Address, 5, 9

I

IP address, 5

N

Network, 5
Network Boot, 5

P

Printing without Using a Print Server, 4
Print with a Print Server, 1
NetWare Print Server, 2
Windows 2000/Windows NT 4.0 Print server, 1

S

Setup Guide for each Network Environment, 1
Subnet Mask, 5, 9

Copyright © 2001

UE USA G060-6960

Introduction **6**

How to Read This Manual **8**

1. Windows 2000 Print Server Configuration

Configuring the Protocols **10**
Configuring TCP/IP and IPP for Printing 10
Configuring NetBEUI for Printing 12

Installing Software **14**
Installing by "Network" installation 14
Changing Port Settings 17

Printing with a Standard TCP/IP Port **18**
Installing the Printer Driver 18

Configuring LPR Port Printing **20**
Installing the Printer Driver 20

Setting Up Options **22**

Setting the Printer Shared **25**

2. Windows NT 4.0 Print Server Configuration

Configuring the Protocols **26**
Configuring TCP/IP and IPP for Printing 26
Configuring NetBEUI for Printing 28
Installing Software **30**
Installing by "Network" installation 30
Changing Port Settings 33
Configuring LPR Port Printing **34**
Installing the Printer Driver 34
Setting Up Options **36**
Setting the Printer Shared **39**

3. NetWare Configuration

NetWare 3.x - Advanced Settings **41**
Installing SmartNetMonitor for Admin 42
Setting Up as a Print Server 43
Setting Up as a Remote Printer 45
NetWare 4.x, 5 - Advanced Settings **49**
Installing SmartNetMonitor for Admin 50
Setting Up as a Print Server 51
Setting Up as a Remote Printer 55

4. Monitoring and Configuring the Printer

Changing Names and Comments **59**
SmartNetMonitor for Admin 60
Web Browser 62
Displaying the Status of Printer **64**
SmartNetMonitor for Admin 64
SmartNetMonitor for Client 65
Web Browser 66

5. Making Printer Settings with the Operation Panel

Menu Chart **67**
Accessing the Main Menu **70**
Paper Input Menu **73**
Paper Input Parameters 73
Changing the Paper Input Menu 76
List/Test Print Menu **80**
List/Test Print Parameters 80
Printing a Configuration Page 81
Interpreting the Configuration Page 84
Maintenance Menu **87**
Maintenance Menu Parameters 88
Changing the Maintenance Menu 90
System Menu **93**
System Parameters 94
Changing the System Menu 99

Host Interface Menu **102**
Host Interface Parameters 102
Changing the Host Interface Menu 106
PCL Menu **109**
PCL Parameters 109
Changing the PCL Menu 112
Language Menu **115**
Changing the Language Menu 115

6. Appendix

Configuring the Printer using SmartNetMonitor for Admin **118**
Changing the Network Interface Board Configuration 119
Locking the Menus on the Printer's Operating Panel 120
Changing the Paper Type 121
Managing the Number of Copies to be Printed 122
Configuring the Energy Save Mode 123
Configuring the Network Interface Board with a Web Browser **124**
Going to the Top Page 125
SNMP **128**
Remote Maintenance by telnet **129**
Using telnet 129
Commands List 130
Getting Printer Information over the Network **146**
Printer current status 146
Printer configuration 155

Understanding the Displayed Information 159
Print Job Information 159
Print Log Information 160
Configuring the Network Interface Board 161
Message List 164
System Log Information 164
Precautions 170
Connecting a Dial Up Router to a Network 170
PostScript Printing from Windows 171
NetWare Printing 172
When Using DHCP 173
Memory Capacity and Paper Size 175
Moving and Transporting the Printer 177
Moving the Printer 178
Specifications 179
Mainframe 179
Options 183
INDEX 190

Introduction

To get maximum versatility from this machine all operators should carefully read and follow the instructions in this manual. Please keep this manual in a handy place near the machine.

Please read the Safety Information in the "Setup Guide" before using this machine. It contains important information related to USER SAFETY and PREVENTING EQUIPMENT PROBLEMS.

Important

Parts of this manual are subject to change without prior notice. In no event will the company be liable for direct, indirect, special, incidental, or consequential damages as a result of handling or operating the machine.

Software Version Conventions Used in This Manual

- NetWare 3.x means NetWare 3.12 and 3.2.
- NetWare 4.x means NetWare 4.1, 4.11 and IntranetWare.

Trademarks

Apple, AppleTalk, EtherTalk, LaserWriter, Macintosh are registered trademarks of Apple Computer, Inc.

Ethernet is a registered trademark of Xerox Corporation.

Microsoft, Windows, Windows NT are registered trademarks of Microsoft Corporation in the United States and/or other countries.

Netscape, Netscape Navigator are registered trademarks of Netscape Communications Corporation.

Novell, NetWare, NDS are registered trademarks of Novell, Inc.

PostScript is a registered trademark of Adobe Systems, Incorporated.

PCL is a registered trademark of Hewlett-Packard Company.

Solaris is a trademark or registered trademark of Sun Microsystems, Inc. in the United States and other countries.

Other product names used herein are for identification purposes only and might be trademarks of their respective companies. We disclaim any and all rights in those marks.

Note

The proper names of the Windows operating systems are as follows:

- Microsoft® Windows® 95 operating system
- Microsoft® Windows® 98 operating system
- Microsoft® Windows® Millennium Edition (Windows Me)
- Microsoft® Windows® 2000 Professional
- Microsoft® Windows® 2000 Server
- Microsoft® Windows NT® Server operating system Version 4.0
- Microsoft® Windows NT® Workstation operating system Version 4.0

How to Read This Manual

Symbols

In this manual, the following symbols are used:

⚠ *WARNING:*

This symbol indicates a potentially hazardous situation which, if instructions are not followed, could result in death or serious injury.

⚠ *CAUTION:*

This symbol indicates a potentially hazardous situation which, if instructions are not followed, may result in minor or moderate injury or damage to property.

* The statements above are notes for your safety.

Important

If this instruction is not followed, paper might be misfed, originals might be damaged, or data might be lost. Be sure to read this.

Preparation

This symbol indicates the prior knowledge or preparations required before operating.

Note

This symbol indicates precautions for operation, or actions to take after misoperation.

Limitation

This symbol indicates numerical limits, functions that cannot be used together, or conditions in which a particular function cannot be used.

Reference

This symbol indicates a reference.

[ ]

Keys that appear on the machine's panel display.

Keys and buttons that appear on the computer's display.

【 】

Keys built into the machine's operation panel.

Keys on the computer's keyboard.

Configuring the Protocols

Configuring TCP/IP and IPP for Printing

Follow these instructions to configure the Network Interface Board and Windows 2000 to use the TCP/IP protocol and IPP.

Configuring the printer

Configure the printer to use the TCP/IP protocol.

- Confirm that the TCP/IP protocol is set to be active. (The factory default is active.)
- Assign an IP address and make other settings required for using the TCP/IP protocol.

Reference

❒ For more information about how to make the above settings, see "*Windows 2000 Configuration*" in Printer Client Reference 1 that comes with this printer.

❒ If DHCP is used to assign IP addresses, see p.173 “When Using DHCP”.

Note

❒ After setting the IP address, use the ping command to confirm that it has been set correctly.

① Click **[Start]**, point to **[Programs]**, point to **[Accessories]** and then click **[Command Prompt]**.

② Type the following. (Example IP address is 192.168.15.16)

```
C:> ping 192.168.15.16
```

If the address has been configured correctly, the following message appears.

```
Reply from 192.168.15.16 : bytes=32 time<10ms TTL=32
```

If the address has been configured incorrectly, the following message appears.

```
Request timed out.
```

Configuring a Windows 2000 computer

Follow these steps to configure a Windows 2000 computer to use the TCP/IP protocol.

1 Click [Start] on the taskbar, point to [Settings], and then click [Network and Dial-up Connections].

2 Click [Local Area Connection]. On the [File] menu, click [Properties].

3 Confirm that "Internet Protocol (TCP/IP)" is selected in the [Components checked are used by this connection:] box under the [General] tab.

Note

- ❒ If the check box of TCP/IP protocol is not selected, select the box.
- ❒ If the TCP/IP protocol is not installed, click **[Install]** under the **[General]** tab and install it. For more information about installing the TCP/IP protocol, see Windows 2000 Help file.

4 Configure the TCP/IP protocols with the appropriate IP address, subnet mask and other settings.

Confirm with the network administrator that the settings are correct.

Configuring NetBEUI for Printing

Follow these instructions to configure the Network Interface Board and Windows 2000 to use the NetBEUI protocol.

Configuring the printer

Configure the printer to use the NetBEUI protocol.

- Confirm that the NetBEUI protocol is set to be active. (The factory default is active.)

Reference

❒ For more information about how to make the above settings, see "*Windows 2000 Configuration*" in Printer Client Reference 1 that comes with this printer.

Configuring a Windows 2000 computer

Follow these steps to configure a Windows 2000 computer to use the NetBEUI protocol.

1 **Click [Start] on the taskbar, point to [Settings], and then click [Network and Dial-up Connections].**

2 **Click [Local Area Connection]. On the [File] menu, click [Properties].**

3 **Confirm that "NetBEUI Protocol" is selected in the [Components checked are used by this connection:] box under the [General] tab.**

Note

- If the check box of the NetBEUI protocol is not selected, select the box.
- If the NetBEUI protocol is not installed, click **[Install]** under the **[General]** tab and install it. For more information about installing the NetBEUI protocol, see Windows 2000 Help file. "Network" installation installs the PCL 5c and RPCS printer driver and SmartNetMonitor for Client. When you print using TCP/IP, NetBEUI or IPP protocol in Peer-to-Peer Network, you must select this installation.

Installing Software

Preparation

- ❒ Select "Network" installation when you use the printer for direct printing.
- ❒ "Network" installation installs the PCL 5c and RPCS printer driver and SmartNetMonitor for Client. When you print using TCP/IP, NetBEUI or IPP protocol in Peer-to-Peer Network, you must select this installation.
- ❒ "Custom" installation allows to install SmartNetMonitor for Client separately.

Installing by "Network" installation

1 Close all applications that are running.

2 Insert the CD-ROM into the CD-ROM drive.

The installer will start by Auto Run.

Note

- ❒ Auto Run might not automatically work with certain OS settings. In this case, launch "INST-TOOL.EXE" located on the CD-ROM root directory.

3 Follow the instructions on the screen.

4 Select "Network" installation when the selection screen appears.

5 Follow the instructions on the screen.

6 Select a printer you want to use when the [Select Printer] dialog box appears.

7 **Click [Add..] when the [Select Port] dialog box appear.**

8 **Select [SmartNetMonitor for Client] and then click [OK].**

Available printers will be listed.

9 **Select a printer you want to use.**

TCP/IP

❶ **Select the printer you want to use, and then click [OK].**

Note

❒ Printers that respond to an IP broadcast from the computer will be displayed. To print to a printer not listed here, click **[Specify Address]** and then type the IP address or host name.

NetBEUI

❶ **Click [NetBEUI].**

A list of printers that can be printed by the NetBEUI protocol appears.

❷ **Select the printer you want to use, and then click [OK].**

Note

❒ Printers that respond to an broadcast from the computer will be displayed. To print to a printer not listed here, click **[Specify Address]** and then type the NetBEUI address. Confirm the NetBEUI address on the network configuration page. For more information about the printing of configuration page, see p.173 “When Using DHCP”.

❒ You cannot print to printers beyond routers.

IPP

1. **Click [IPP].**

   The IPP setting dialog box appears.

2. **In [Printer URL], type "http://(printer's IP address)/printer" as the IP address of the printer.**

3. **As necessary, type the names to distinguish the printer in [IPP Port Name]. Type a name differing from those of any existing port names.**

   If you omit this, the address entered in **[Printer URL]** will be set as the IPP port name.

   (Example IP address is 192.168.15.16)

   `http://192.168.15.16/printer`

4. **If using a proxy server and IPP user name, click [Detailed Settings] and configure the necessary settings.**

   Note

   - For more information about these setting, see the Help file.

10. **Click [OK].**

11. **Confirm the selected port is highlighted, and then click [Next].**

12. **Click [Finish].**

    Note

    - During installation, the **[Digital Signature Not Found]** dialog box may appear. In this case, click **[Yes]** to continue the installation.

13. **Restart the computer after installation is complete.**

14 Set up the options with the printer driver.

Note

- ❒ You can specify the "User Code" with the printer properties after installing the printer driver. See the Help file for the printer driver.
- ❒ You must set up the options when the bidirectional transmission is unable. For more information about the conditions of the bidirectional transmission, see p.23 “The conditions of the bidirectional transmissions”.

Changing Port Settings

Follow the steps to change SmartNetMonitor for Client settings, such as the proxy server settings or IPP URL.

Note

- ❒ There are no settings for the NetBEUI protocol.

1 From the [Printers] window, click the icon of the printer you want to use. On the [File] menu, click [Properties].

2 Click the [Ports] tab, and then click [Configure Port].

The **[Port Settings]** dialog box appears

- For TCP/IP protocol, you can configure Timeout Settings.
- For IPP, you can configure User Settings, Proxy Settings and Timeout Settings.

Note

- ❒ For more information about these settings, see SmartNetMonitor for Client Help file.

Printing with a Standard TCP/IP Port

Preparation

- ❒ Select **[Typical]** installation when you use the printer with Standard TCP/IP port.
- ❒ **[Typical]** installation installs the PCL 5c and RPCS printer driver.

Installing the Printer Driver

1 Close all applications that are running.

2 Insert the CD-ROM into the CD-ROM drive.

The installer will start by Auto Run.

Important

- ❒ Never have two versions of the same printer driver installed on your system at the same time. When upgrading to a new version of the printer driver, delete the old version, and then install the new one.

Note

- ❒ Auto Run might not automatically work with certain OS settings. In this case, launch "INST-TOOL.EXE" located on the CD-ROM root directory.

3 Follow the instructions on the screen.

4 Select [Typical] installation, and then click [Next].

5 Follow the instructions on the screen.

6 **Select [Standard TCP/IP] when the "Select Port" dialog box appears, and then click [Next].**

7 **Click [Next] in the "Add Standard TCP/IP Printer Port Wizard" window.**

8 **Type the printer name or IP address in the "Printer Name or IP Address" box.**

9 **Click [Finish] in the "Add Standard TCP/IP Printer Port Wizard" window.**

10 **Confirm that the selected port has been displayed in the "Port" box, and then click [Next].**

Note

- During installation, the **[Digital Signature Not Found]** dialog box may appear. In this case, click **[Yes]** to continue the installation.

11 **Click [Finish].**

Note

- You can specify the "User Code" with the printer properties after installing the RPCS pritner driver. See the Help file for the printer driver.

12 **Restart the computer after the installation is complete.**

13 **Set up the options with the printer driver.**

14 **You must set up the options when the bidirectional transmission is disabled.**

Reference

- For more information about the status of the bidirectional transmission, see p.23 “The conditions of the bidirectional transmissions”.
- For more information about settings for options, see p.22 “Setting Up Options”.

Configuring LPR Port Printing

Preparation

- ❒ Select **[Typical]** installation when you use the printer with the LPR port.
- ❒ **[Typical]** installation installs the PCL 5c and RPCS printer driver.

Installing the Printer Driver

1 Close all applications that are running.

2 Insert the CD-ROM into the CD-ROM drive.

The installer will start by Auto Run.

Important

- ❒ Never have two versions of the same printer driver installed on your system at the same time. When upgrading to a new version of the printer driver, delete the old version, and then install the new one.

Note

- ❒ Auto Run might not automatically work with certain OS settings. In this case, launch "INST-TOOL.EXE" located on the CD-ROM root directory.

3 Follow the instructions on the screen.

4 Select [Typical] installation, and then click [Next].

5 Follow the instructions on the screen.

6 **Select [LPR Port] when the "Select Port" dialog box appears, and then click [Next].**

7 **Type the printer's IP address in the "Name or address of server providing lpd" box.**

8 **Type "lp" in the "Name of printer or print queue on that server" box, and then click [OK].**

9 **Confirm that the selected port has been displayed in the "Port" box, and then click [Next].**

10 **Click [Finish].**

Note

- During installation, the **[Digital Signature Not Found]** dialog box may appear. In this case, click **[Yes]** to continue the installation.

11 **Restart the computer after the installation is complete.**

12 **Set up the options with the printer driver.**

Reference

- For more information about settings for options, see p.22 “Setting Up Options”.

Note

- You can specify the "User Code" with the printer properties after installing the printer driver. See the Help file for the printer driver.
- You must set up the options when the bidirectional transmission is disabled. For more information about the status of the bidirectional transmission, see p.23 “The conditions of the bidirectional transmissions”.

Setting Up Options

You must set up installed options, paper size and feed direction with the printer driver when the bidirectional transmission is disabled.

Limitation

- ❒ Changing the printer settings requires Manage Printers permission. Members of the Administrators and Power Users groups have Manage Printers permission by default. When you set up options, log on using an account that has Manage Printers permission.

1 Click [Start] on the taskbar, point to [Settings], and then click [Printers].

The **[Printers]** window appears.

2 Click the icon of the printer you want to use. On the [File] menu, click [Properties].

3 Click the [Accessories] tab.

Note

- ❒ If you use the RPCS printer driver, Click **[Change Accessories]** tab.
- ❒ If you use the PS printer driver, Click **[Device Settings]** tab.

4 Select options you have installed from the [Options] group and make any settings you require.

5 Click [OK] .

The conditions of the bidirectional transmissions

When the bidirectional transmissions is enabled, the information about the paper size and feed direction settings are automatically sent to the printer by the computer. You can also confirm the printer's condition from your computer.

- The bidirectional transmissions is supported by Windows 95/98/Me, Windows 2000 and Windows NT 4.0.
- If you use the RPCS ptinter driver and the bidirectional transmissions is enabled, the **[Change Accessories]** tab are grayed out.

Note

❒ The RPCS pritner driver supports the bidirectional transmission and update the printer status automatically.

❒ The PCL 5c printer driver supports the bidirectional transmission, you can update the printer status manually.

❒ The PostScript 3 printer driver does not supports the bidirectional transmission.

To support the bidirectional transmissions, the following conditions below are required.

❖ Connecting with the parallel interface cable and the USB exchange cable.

- The computer supports the bidirectional transmissions.
- The Interface cable supports the bidirectional transmissions.
- The printer is connected to the computer using the standard parallel interface cable and the parallel connector.
- On Windows 2000, the **[Enable bidirectional support]** is selected and **[Enable printer pooling]** is not selected under the **[ports]** tab.

❖ Connecting with the network

- SmartNetMonitor for Client and the TCP/IP protocol are used.
- On Windows 2000, the **[Enable bidirectional support]** is selected and **[Enable printer pooling]** is not selected under the **[ports]** tab.
- SmartNetMonitor for Client included on the CD-ROM is installed.

Setting the Printer Shared

Limitation

- ❒ Changing the printer settings requires Manage Printers permission. Members of the Administrators and Power Users groups have Manage Printers permission by default. When you set up options, log on using an account that has Manage Printers permission.

1 **Click [Start] on the taskbar, point to [Settings], and then click [Printers].**

The **[Printers]** window appears.

2 **Click the icon of the printer you want to use. On the [File] menu, click [Properties].**

3 **Select [Shared as:] under the [Sharing] tab.**

4 **Click [OK].**

Configuring the Protocols

Configuring TCP/IP and IPP for Printing

Follow these instructions to configure the Network Interface Board and Windows NT to use the TCP/IP protocol and IPP.

Configuring the printer

Configure the printer to use the TCP/IP protocol.

- Confirm that the TCP/IP protocol is set to be active. (The factory default is active.)
- Assign an IP address and make other settings required for using the TCP/IP protocol.

Reference

❒ For more information about how to make the above settings, see "*Windows NT 4.0 Configuration*" in Printer Client Reference 1 that comes with this printer.

❒ If DHCP is used to assign IP addresses, see p.37 “The conditions of the bidirectional transmissions”.

Note

❒ After setting the IP address, use the ping command to confirm that it has been set correctly.

① Click **[Start]**, point to **[Programs]**, and then click **[Command Prompt]**.

② Type the following. (Example IP address is 192.168.15.16)

```
C:> ping 192.168.15.16
```

If the address has been configured correctly, the following message appears.

```
Reply from 192.168.15.16 : bytes=32 time<10ms TTL=32
```

If the address has been configured incorrectly, the following message appears.

```
Request timed out.
```

Configuring a Windows NT computer

Follow these steps to configure a Windows NT computer to use the TCP/IP protocol.

1 Open [Control Panel] and double-click the [Network] icon. Confirm that "TCP/IP Protocol" is listed in the [Network protocols] box under the [Protocols] tab.

Note

- ❒ If the TCP/IP protocol is not installed, click **[Add]** under the **[Protocols]** tab and install it. For more information about installing the TCP/IP protocol, see Windows NT Help file.

2 Configure the TCP/IP protocols with the appropriate IP address, subnet mask and other settings.

Confirm with the network administrator that the settings are correct.

3 Click the [Services] tab, and confirm that "Microsoft TCP/IP Printing" is installed.

If "Microsoft TCP/IP Printing" is not installed, click **[Add]** under the **[Services]** tab, and install it. For more information about installing and configuring network services, see Windows NT Help file.

Configuring NetBEUI for Printing

Follow these instructions to configure the Network Interface Board and Windows NT to use the NetBEUI protocol.

Configuring the printer

Configure the printer to use the NetBEUI protocol.

- Confirm that the NetBEUI protocol is set to be active. (The factory default is active.)

Reference

❒ For more information about how to make the above settings, see "*Windows NT 4.0 Configuration*" in Printer Client Reference 1 that comes with this printer.

Configuring a Windows NT computer

Install the NetBEUI protocol on the Windows NT computer, and change the LAN adapter number (Lana Number).

1 Open [Control Panel] and double-click the [Network] icon. Confirm that "NetBEUI Protocol" is listed in the [Network Protocols] box under the [Protocols] tab.

Note

❒ If the NetBEUI protocol is not installed, click **[Add...]** under the **[Protocols]** tab, and install it. For more information about installing the NetBEUI protocol, see Windows NT Help file.

2 Change the Lana Number. Click the [Services] tab, click "NetBIOS Interface" in the [Network Services:] box , and click [Properties:].

3 **Click the Lana Number corresponding the Nbf protocol of the [Network Route] headline, and click [Edit].**

4 **Type "0" as the Lana Number.**

Note

- ❒ If the other protocol's Lana Number is configured with "0", you must change the Lana Number a number other than "0".

5 **Click [OK].**

6 **Click [Close], and close the [Network] dialog box.**

7 **After confirming the message to restart, click [Yes].**

Note

- ❒ After you change the Lana Number, you must restart the computer.

Installing Software

Preparation

- ❒ Select "Network" installation when you use the printer for direct printing.
- ❒ "Network" installation installs the PCL 5c and RPCS printer driver and SmartNetMonitor for Client. When you print using TCP/IP, NetBEUI or IPP protocol in Peer-to-Peer Network, you must select this installation.
- ❒ "Custom" installation allows to install SmartNetMonitor for Client separately.

Installing by "Network" installation

1 Close all applications that are running.

2 Insert the CD-ROM into the CD-ROM drive.

The installer will start by Auto Run.

Note

- ❒ Auto Run might not automatically work with certain OS settings. In this case, launch "INST-TOOL.EXE" located on the CD-ROM root directory.

3 Follow the instructions on the screen.

4 Select "Network" installation when the selection screen appears.

5 Follow the instructions on the screen.

6 Select a printer you want to use when the [Select Printer] dialog box appears.

7 **Click [Add..] when the [Select Port] dialog box appear.**

8 **Select [SmartNetMonitor for Client] and then click [OK].**

Available printers will be listed.

9 **Select a printer you want to use.**

TCP/IP

❶ **Select the printer you want to use, and then click [OK].**

Note

❒ Printers that respond to an IP broadcast from the computer will be displayed. To print to a printer not listed here, click **[Specify Address]** and then type the IP address or host name.

NetBEUI

❶ **Click [NetBEUI].**

A list of printers that can be printed by the NetBEUI protocol appears.

❷ **Select the printer you want to use, and then click [OK].**

Note

❒ Printers that respond to an broadcast from the computer will be displayed. To print to a printer not listed here, click **[Specify Address]** and then type the NetBEUI address. Confirm the NetBEUI address on the network configuration page. For more information about the printing of configuration page, see p.37 “The conditions of the bidirectional transmissions”.

❒ You cannot print to printers beyond routers.

IPP

1. **Click [IPP].**

   The IPP setting dialog box appears.

2. **In [Printer URL], type "http://(printer's IP address)/printer" as the IP address of the printer.**

3. **As necessary, type the names to distinguish the printer in [IPP Port Name]. Type a name differing from those of any existing port names.**

   If you omit this, the address entered in **[Printer URL]** will be set as the IPP port name.

   (Example IP address is 192.168.15.16)

   `http://192.168.15.16/printer`

4. **If using a proxy server and IPP user name, click [Detailed Settings] and configure the necessary settings.**

   Note

   - For more information about these setting, see the Help file.

10. **Click [OK].**

11. **Confirm the selected port is highlighted, and then click [Next].**

12. **Click [Finish].**

    Note

    - During installation, the **[Digital Signature Not Found]** dialog box may appear. In this case, click **[Yes]** to continue the installation.

13. **Restart the computer after installation is complete.**

14 Set up the options with the printer driver.

Note

- ❒ You can specify the "User Code" with the printer properties after installing the printer driver. See the Help file for the printer driver.
- ❒ You must set up the options when the bidirectional transmission is unable. For more information about the conditions of the bidirectional transmission, see p.37 “The conditions of the bidirectional transmissions”

Changing Port Settings

Follow the steps to change SmartNetMonitor for Client settings, such as the proxy server settings or IPP URL.

Note

- ❒ There are no settings for the NetBEUI protocol.

1 From the [Printers] window, click the icon of the printer you want to use. On the [File] menu, click [Properties].

2 Click the [Ports] tab, and then click [Configure Port].

The **[Port Settings]** dialog box appears

- For TCP/IP protocol, you can configure Timeout Settings.
- For IPP, you can configure User Settings, Proxy Settings and Timeout Settings.

Note

- ❒ For more information about these settings, see SmartNetMonitor for Client Help file.

Configuring LPR Port Printing

Preparation

- ❒ Select **[Typical]** installation when you use the printer with the LPR port.
- ❒ **[Typical]** installation installs the PCL 5c and RPCS printer driver.

Installing the Printer Driver

1 Close all applications that are running.

2 Insert the CD-ROM into the CD-ROM drive.

The installer will start by Auto Run.

Important

- ❒ Never have two versions of the same printer driver installed on your system at the same time. When upgrading to a new version of the printer driver, delete the old version, and then install the new one.

Note

- ❒ Auto Run might not automatically work with certain OS settings. In this case, launch "INST-TOOL.EXE" located on the CD-ROM root directory.

3 Follow the instructions on the screen.

4 Select [Typical] installation, and then click [Next].

5 Follow the instructions on the screen.

6 **Select [LPR Port] when the "Select Port" dialog box appears, and then click [Next].**

7 **Type the printer's IP address in the "Name or address of server providing lpd" box.**

8 **Type "lp" in the "Name of printer or print queue on that server" box, and then click [OK].**

9 **Confirm that the selected port has been displayed in the "Port" box, and then click [Next].**

10 **Click [Finish].**

Note

- During installation, the **[Digital Signature Not Found]** dialog box may appear. In this case, click **[Yes]** to continue the installation.

11 **Restart the computer after the installation is complete.**

12 **Set up the options with the printer driver.**

Reference

- For more information about settings for options, see p.36 “Setting Up Options”.

Note

- You can specify the "User Code" with the printer properties after installing the printer driver. See the Help file for the printer driver.
- You must set up the options when the bidirectional transmission is disabled. For more information about the status of the bidirectional transmission, see p.37 “The conditions of the bidirectional transmissions”.

Setting Up Options

You must set up installed options, paper size and feed direction with the printer driver when the bidirectional transmission is disabled.

Limitation

- ❒ Changing the printer settings requires Full Control Access permission. Members of the Administrators and Power Users groups have Full Control Access permission by default. When you set up options, log on using an account that has Full Control Access permission.

1 Click [Start] on the taskbar, point to [Settings], and then click [Printers].

The **[Printers]** window appears.

2 Click the icon of the printer you want to use. On the [File] menu, click [Properties].

3 Click the [Accessories] tab.

Note

- ❒ If you use the RPCS printer driver, Click **[Change Accessories]** tab.
- ❒ If you use the PS printer driver, Click **[Device Settings]** tab.

4 Select options you have installed from the [Options] group and make any settings you require.

5 Click [OK] .

The conditions of the bidirectional transmissions

When the bidirectional transmissions is enabled, the information about the paper size and feed direction settings are automatically sent to the printer by the computer. You can also confirm the printer's condition from your computer.

- The bidirectional transmissions is supported by Windows 95/98/Me, Windows 2000 and Windows NT 4.0.
- If you use the RPCS ptinter driver and the bidirectional transmissions is enabled, the **[Change Accessories]** tab are grayed out.

Note

❒ The RPCS pritner driver supports the bidirectional transmission and update the printer status automatically.

❒ The PCL 5c printer driver supports the bidirectional transmission, you can update the printer status manually.

❒ The PostScript 3 printer driver does not supports the bidirectional transmission.

To support the bidirectional transmissions, the following conditions below are required.

❖ Connecting with the parallel interface cable and the USB exchange cable.

- The computer supports the bidirectional transmissions.
- The Interface cable supports the bidirectional transmissions.
- The printer is connected to the computer using the standard parallel interface cable and the parallel connector.
- On Windows NT 4.0, the **[Enable bidirectional support]** is selected and **[Enable printer pooling]** is not selected under the **[ports]** tab.

❖ Connecting with the network

- SmartNetMonitor for Client and the TCP/IP protocol are used.
- On Windows NT 4.0, the **[Enable bidirectional support]** is selected and **[Enable printer pooling]** is not selected under the **[ports]** tab.
- SmartNetMonitor for Client included on the CD-ROM is installed.

Setting the Printer Shared

Limitation

- ❒ Changing the printer settings requires Full Control Access permission. Members of the Administrators and Power Users groups have Full Control Access permission by default. When you set up options, log on using an account that has Full Control Access permission.

Use the **[Printers]** window to set up the printer.

1 Click [Start] on the taskbar, point to [Settings], and then click [Printers].

The **[Printers]** window appears.

2 Click the icon of the printer you want to use. On the [File] menu, click [Properties].

3 Select [Shared] in the [Sharing] tab.

Note

- ❒ If you use alternate drivers for Windows 95/98/Me client, service pack 4 or more is required. And install the appropriate printer driver for each client.

4 Click [OK].

The printers attached to the network are displayed.

3. NetWare Configuration

This chapter describes how to configure the printer to use as a print server or a remote printer in a NetWare environment.

Note

❒ NetWare must be set to active using the operation panel of the printer. For more information about how to set it, see Administrator Reference 1 that comes with this printer.

❖ SmartNetMonitor for Admin

To use a printer in a NetWare environment, configure the NetWare printing environment by using SmartNetMonitor for Admin.

Note

❒ If you configure NetWare printing environment by using SmartNetMonitor for Admin under following environment, NetWare Client which is provided by Novell is required.

- NDS mode in Windows 95/98
- NDS or Bindary mode in Windows 2000/Windows NT4.0

❖ Printers listed by SmartNetMonitor for Admin

SmartNetMonitor for Admin displays a list of printers, which are connected to the network.
If you cannot find out the printer from the displayed list, refer to the configuration page printed from the printer. For more information about printing a configuration page, see p.81 “Printing a Configuration Page”.

NetWare 3.x - Advanced Settings

The actual procedures for configuring the printer differ depending on whether the Network Interface Board is configured as a print server or as a remote printer. This section describes how to configure it in the NetWare 3.x environment.

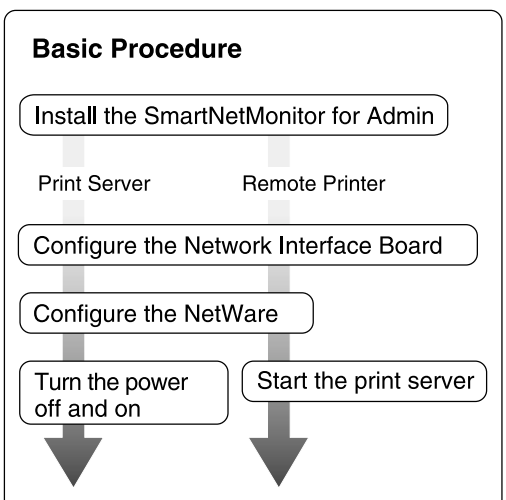

Note

- This section assumes NetWare is functional and that the necessary environment for the NetWare Print Service is available.

Installing SmartNetMonitor for Admin

1 Close all applications that are running.

2 Insert the CD-ROM into the CD-ROM drive.

The installer will start by Auto Run.

Note

- ❒ Auto Run might not automatically work with certain OS settings. In this case, launch "INSTTOOL.EXE" located on the CD-ROM root directory.

3 Follow the instructions on the screen.

4 Select "Custom" installation and then click [Next].

5 Remove the check mark from the RPCS Printer Driver and PCL 5c Printer Driver.

6 Click to select [SmartNetMonitor for Admin], and then click [Install].

7 Click [OK].

8 Follow the instructions on the screen.

After installation is completed, see p.43 “Setting Up as a Print Server” when you use the printer as a print server.

See p.45 “Setting Up as a Remote Printer” when you use the printer as a remote printer.

Note

- ❒ If you require restarting the computer after installation of SmartNetMonitor for Admin was completed, restart the computer and continue to configuration.

Setting Up as a Print Server

1 Log on to the file server as a Supervisor or a Supervisor equivalent.

2 Run SmartNetMonitor for Admin.

3 Click the [Group] menu and click [Open LAN] and select [IPX/SPX].

A list of printers appears

Note

- ❒ If you cannot identify which printer to configure from the list of printers, print Configuration Page from the printer and find the desired printer. For more information about printing Configuration Page, see p.81 “Printing a Configuration Page”.
- ❒ If no printer name appears in the list, match the frame types of the IPX/SPX protocol between the computer and printer. Use the **[Network]** dialog box of Windows to change the frame type of the computer. For more information about changing the frame type of equipment, see "*Configuring the Printer for the Network*" in Administrator Reference 1.

4 Click to select the printer you want to configure, and then click [NIB Setup Tool] on the [Tools] menu.

5 Click to select [Wizard], and then click [OK].

6 Type the device name into the [Device Name] box and comment into the [Comment] box as necessary, and then click[Next].

7 Select the [NetWare] check box, and then click [Next].

8 Click to select [Bindery Mode], type the file server name into the [File Server Name:] box, and then click [Next].

In the **[File Server Name:]** box, type the name of the file server in which a print server is to be created. You can also select a file server from the list that appears by clicking **[Browse]**.

9 Type the print server name into the [Print Server Name] box, printer name into the [Printer Name] box, and print queue name into the [Print Queue Name] box, and then click [Next].

- In the **[Print Server Name]** box, type the name of the NetWare print server within 47 characters.
- In the **[Printer Name]** box, type the name of the NetWare printer.
- In the **[Print Queue Name]** box, type the name of the print queue to be added to NetWare.

10 After confirming the settings, click [Next].

The settings take effect, and the NIB setup tool exits.

11 Exit SmartNetMonitor for Admin.

12 Turn the printer power off and on.

Note

❒ To confirm that the printer is configured correctly, type as follows from the command prompt.

```
F:> USERLIST
```

❒ If the printer works as configured, the name of the print server appears as an attached user.

Setting Up as a Remote Printer

1 Log on to the file server as a Supervisor or a Supervisor equivalent.

2 Run the SmartNetMonitor for Admin.

3 Click the [Group] menu and click [Open LAN] and select [IPX/SPX].

A list of printers appears.

Note

- ❒ If you cannot identify which printer to configure from the list of printers, print Configuration Page from the printer and find the desired printer. For more information about printing Configuration Page, see p.81 “Printing a Configuration Page”.
- ❒ If no printer name appears in the list, match the frame types of the IPX/SPX protocol between the computer and printer. Use the **[Network]** dialog box of Windows to change the frame type of the computer. For more information about changing the frame type of equipment, see "*Configuring the Printer for the Network*" in Administrator Reference 1.

4 Click to select the printer you want to configure, and then click [NIB Setup Tool] on the [Tools] menu.

5 Click to select [Property Sheet] and click [OK].

6 Click the [NetWare] tab, and make the following settings.

❶ **In the [Print Server Name] box, type the name of the print server.**

❷ **In the [File Server Name] box, type the name of the file server in which a print server is to be created.**

Clicking **[Browse]**, you can select a file server among those listed in the **[Browse]** dialog box.

❸ **In the [Print Server Operation Mode] group, click [As Remote Printer].**

❹ **In the [Remote Printer No.] box, type the printer number.**

Important

❒ Use the same printer number as that to be created in the printer server.

❺ **Click [OK] to close the property sheet.**

❻ **After a confirmation dialog box appears, click [OK].**

7 **On the [NIB] menu, click [Exit] to exit the NIB Setup Tool.**

8 **Type "PCONSOLE" from the command prompt.**

```
F:> PCONSOLE
```

9 **Create a print queue as follows.**

Note

❒ If you use a currently defined print queue, go to step 10.

❶ **From the [Available Options] menu, select [Print Queue Information] and press 【ENTER】.**

❷ **Press 【INSERT】 and type a print queue name.**

❸ **Press 【ESC】 to return to the [Available Options] menu.**

10 **Create a printer as follows.**

❶ **From the [Available Options] menu, select [Print Server Information] and press 【ENTER】.**

❷ **To create a new print server, press 【INSERT】 and type a print server name.**

If you use an currently defined print server, select one of the print servers shown in the **[Print Server]** list.

Important

❒ Use the same name as that specified in the NIB Setup Tool. (Step 6).

❸ **From the [Print Server Information] menu, select [Print Server Configuration].**

❹ **From the [Print Server Configuration] menu, select [Printer Configuration].**

❺ **Select the printer which is indicated as "Not Installed".**

Important

❒ Use the same number as that specified as Remote Printer No. using the NIB Setup Tool. (Step 6-❹).

❻ **If you change the name of the printer, type a new name.**

A name "Printer x" is assigned to the printer. x stands for the number of the selected printer.

❼ **As type, select [Remote Parallel, LPT1].**

The IRQ, Buffer size, Starting form, and Queue service mode are automatically configured.

❽ **Press the 【ESC】 key, and click [Yes] in the confirmation dialog box.**

❾ **Press the 【ESC】 key to return to [Print Server Configuration Menu].**

11 Assign print queues to the created printer as follows.

❶ **From [Print Server Configuration Menu], select [Queues Serviced By Printer].**

❷ **Select the printer created in step 10.**

❸ **Press the 【INSERT】 key to select a queue serviced by the printer.**

Note

❒ You can select more than one queue at a time.

❹ **Follow the instructions on the screen to make other necessary settings.**

When you have finished the above steps, confirm that the queues are assigned.

12 Press the 【ESC】 key until "Exit?" appears, and select [Yes] to exit PCONSOLE.

13 Start the print server by typing the following from the console of the NetWare Server.

If it is running, restart it after exiting it.

❖ **To exit**

```
CAREE: unload pserver
```

❖ **To start**

```
CAREE: load pserver print_server_name
```

Note

❒ If the printer works as configured, "Waiting for job" appears.

NetWare 4.x, 5 - Advanced Settings

The actual procedures for configuring the printer differ depending on whether the Network Interface Board is configured as a print server or as a remote printer. This section describes how to configure it in the NetWare 4.x, 5 environment.

❖ To use NetWare 5

- If you use Pure IP, use the printer as a print server. You cannot use the printer as a remote printer when you use Pure IP.
- If you use Pure IP, configure the printer to use the TCP/IP protocol. For more information about how to make the settings, see "*Configuring the printer for the Network*" in Administrator Reference 1 that comes with this printer.

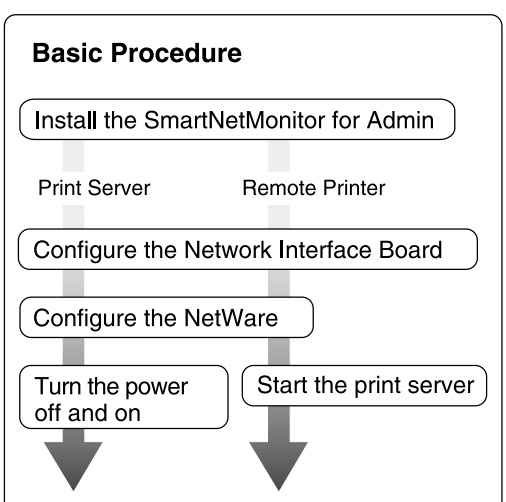

Installing SmartNetMonitor for Admin

1 Close all applications that are running.

2 Insert the CD-ROM into the CD-ROM drive.

The installer will start by Auto Run.

Note

- ❒ Auto Run might not automatically work with certain OS settings. In this case, launch "INST-TOOL.EXE" located on the CD-ROM root directory.

3 Follow the instructions on the screen.

4 Select "Custom" installation and then click [Next].

5 Remove the check mark from the RPCS Printer Driver and PCL 5c Printer Driver.

6 Click to select [SmartNetMonitor for Admin], and then click [Install].

7 Click [OK].

8 Follow the instructions on the screen.

After installation is completed, see p.43 “Setting Up as a Print Server” when you use the printer as a print server.

See p.45 “Setting Up as a Remote Printer” when you use the printer as a remote printer.

Note

- ❒ If you require restarting the computer after installation of SmartNetMonitor for Admin was completed, restart the computer and continue to configuration.

Setting Up as a Print Server

1 Log on to the file server as a Supervisor or a Supervisor equivalent.

2 Run SmartNetMonitor for Admin.

3 Click the [Group] menu and click [Open LAN] and select [IPX/SPX] or [TCP/IP].

A list of printers appears

Note

- ❒ If you use Pure IP, select **[TCP/IP]**.
- ❒ If you cannot identify which printer to configure from the list of printers, print Configuration Page from the printer and find the desired printer. For more information about printing Configuration Page, see p.81 “Printing a Configuration Page”.
- ❒ If no printer name appears in the list, match the frame types of the IPX/SPX protocol between the computer and printer. Use the **[Network]** dialog box of Windows to change the frame type of the computer. For more information about changing the frame type of equipment, see "*Configuring the Printer for the Network*" in Administrator Reference 1.

4 Click to select the printer you want to configure, and then click [NIB Setup Tool] on the [Tools] menu.

Note

- ❒ If you use Pure IP, see p.53 “Using Pure IP in the NetWare 5 environment”

5 Click to select [Wizard], and then click [OK].

6 Type the device name into the [Device Name] box and comment into the [Comment] box as necessary, and then click[Next].

7 Select the [NetWare] check box, and then click [Next].

8 Click to select [NDS Mode], type the file server name into the [File Server Name:] box, the NDS tree name into the [NDS Tree:] box and the context into the [NDS Context:] box, and then click [Next].

In the **[File Server Name:]** box, type the name of the file server in which a print server is to be created. You can also select a file server from the list that appears by clicking **[Browse]**.

Clicking **[Browse]**, you can select a NDS context among those listed in the **[Browse]** dialog box.

As a context, object names are typed from a lower object and divided by a period. For example, if you want to create a print server into NET under DS, type "NET.DS".

9 Type the print server name into the [Print Server Name] box, printer name into the [Printer Name] box, print queue name into the [Print Queue Name] box, and print queue volume into the [Print Queue Volume], and then click [Next].

- In the **[Print Server Name]** box, type the name of the NetWare print server within 47 characters.
- In the **[Printer Name]** box, type the name of the NetWare printer.
- In the **[Print Queue Name]** box, type the name of the print queue to be added to NetWare.
- In the **[Print Queue Volume]**, type the volume of print queue. As a volume, object names are typed from a lower object and divided by a period. You can select a volume by clicking **[Browse]**.

10 After confirming the settings, click [Next].

The settings take effect, and the NIB setup tool exits.

11 Exit SmartNetMonitor for Admin.

12 Turn the printer power off and on.

Note

- ❒ To confirm that the printer is configured correctly, type as follows from the command prompt.

```
F:> NLIST USER /A/B
```

- ❒ If the printer works as configured, the name of the print server appears as an attached user.

Using Pure IP in the NetWare 5 environment

1 Log on to the file server as an Admin or an Admin equivalent.

2 Run SmartNetMonitor for Admin.

3 Click [Property Sheet] and click [OK].

The **[NIB Setup Tool]** dialog box appears.

4 Click the [NetWare] tab, and make the following settings.

❶ **In the [Print Server Name:] box, type the name of the print server.**

❷ **In the [File Server Name:] box, type the name of the file server in which a print server is to be created.**

Clicking **[Browse]**, you can select a file server among those listed in the **[Browse File Server]** dialog box.

❸ **In the [NDS Context:] box, type the context of the print server.**

Clicking **[Browse]**, you can select a NDS tree and a NDS context among those listed in the **[Browse Context]** dialog box.

As a context, object names are typed from a lower object and divided by a period. For example, if you want to create a print server into NET under DS, type "NET.DS".

❹ **In the [Print Server Operation Mode] group, click [As Print Server].**

❺ **Click [OK] to close the property sheet.**

❻ **After a confirmation dialog box appears, click [OK].**

5 Exit SmartNetMonitor for Admin.

After this step, go to step 12 on p.51 “Setting Up as a Print Server”.

Setting Up as a Remote Printer

1 Log on to the file server as an Admin or an Admin equivalent.

2 Run the SmartNetMonitor for Admin.

3 Click the [Group] menu and click [Open LAN] and select [IPX/SPX].

A list of printers appears.

Note

- ❒ If you cannot identify which printer to configure from the list of printers, print Configuration Page from the printer and find the desired printer. For more information about printing Configuration Page, see p.81 “Printing a Configuration Page”.
- ❒ If no printer name appears in the list, match the frame types of the IPX/SPX protocol between the computer and printer. Use the **[Network]** dialog box of Windows to change the frame type of the computer. For more information about changing the frame type of equipment, see "*Configuring the Printer for the Network*" in Administrator Reference 1.

4 Click to select the printer you want to configure, and then click [NIB Setup Tool] on the [Tools] menu.

5 Click to select [Property Sheet] and click [OK].

6 Click the [NetWare] tab, and make the following settings.

❶ **In the [Print Server Name] box, type the name of the print server.**

❷ **In the [File Server Name] box, type the name of the file server in which a print server is to be created.**

Clicking **[Browse]**, you can select a file server among those listed in the **[Browse]** dialog box.

❸ **In the [NDS Context] box, type the context in which the print server is to be created.**

Clicking **[Browse]**, you can select a context among those listed in the **[Browse]** dialog box.

As an context, object names are typed from a lower level object and divided by a period. For example, if you want to create a print server into NET under DS, type "NET.DS".

❹ **In the [Print Server Operation Mode] group, click [As Remote Printer].**

❺ **In the [Remote Printer No.] box, type the number of the printer.**

Important

❒ Use the same number as that of the printer to be created in the print server.

❻ **Click [OK] to close the property sheet.**

7 **On the [NIB] menu, click [Exit] to exit the NIB Setup Tool.**

8 **From Windows, run NW Admin.**

Reference

❒ For more information about NWAdmin, see the documentation that comes with the NetWare.

9 **Create a print queue as follows.**

❶ **Select the container object the print queue is located in among those in the directory tree, and click [Create] on the [Object] menu.**

❷ **In the [Class of new object] box, click "Print Queue", and click [OK].**

❸ In the [Print Queue name] box, type the name of the print queue.

❹ In the [Print Queue Volume] box, click [Browse] button.

❺ In the [Available objects] box, click the volume in which the print queue is created, and click [OK].

❻ After confirming the settings, click [Create].

10 Create a printer as follows.

❶ Select the container object the printer is located in, and click [Create] in the [Object] menu.

❷ In the [Class of new object] box, click "Printer", and click [OK]. When you are using NetWare 5, click "Printer (Non NDPS)".

❸ In the [Printer name] box, type the name of the printer.

❹ Click [Define additional properties] to check a box, and click [Create].

11 Assign print queues to the created printer as follows.

❶ Click [Assignments], and click [Add] in the [Assignments] group.

❷ In the [Available objects] box, click the queue created in step 9, and click [OK].

❸ Click [Configuration], and in the [Printer type] box, select [Parallel] using the drop-down menu, and then click [Communication].

❹ Click [Manual load] in the [Communication type] group, and click [OK].

❺ After confirming the settings, click [OK].

12 Create a print server as follows.

❶ Select the context specified using the NIB Setup Tool (Step 6-❶), and on the [Object] menu, click [Create].

❷ In the [Class of new object] box, click "Print Server", and click [OK]. When you are using NetWare 5, click "Print Sever (Non NDPS)".

❸ **In the [Print Server name] box, type the name of the print server.**

Important

❒ Use the same name as that specified using the NIB Setup Tool. (Step 6).

❹ **Click [Define additional properties] to check a box, and click [Create].**

13 Assign the printer to the created print server as follows.

❶ **Click [Assignments], and click [Add] in the [Assignments] group.**

❷ **In the [Available objects] box, click the queue created in the step 10, and click [OK].**

❸ **In the [Printers] group, click the printer assigned in step ❷, and click [Printer Number].**

❹ **Type the printer number and click [OK].**

Important

❒ Use the same number as that specified as Remote Printer No. using the NIB Setup Tool. (Step 6-❺).

❺ **After confirming the settings, click [OK].**

14 Start the print server by typing the following from the console of the NetWare Server.

If it is running, restart it after exiting it.

❖ **To exit**

```
CAREE: unload pserver
```

❖ **To start**

```
CAREE: load pserver print_server_name
```

Changing Names and Comments

You can change printer names and make a comment on printers to ease your identifying the printers listed on SmartNetMonitor for Client.

The following utilities are used to change printer names and comments.

❖ SmartNetMonitor for Admin

Allows you to change names and comments when the TCP/IP protocol or IPX/SPX protocol is available. You can install SmartNetMonitor for Admin from the CD-ROM that comes with the printer. For more information about installing SmartNetMonitor for Admin, see p.50 “Installing SmartNetMonitor for Admin”.

❖ Web Browser

Allows you to change names and comments when the TCP/IP protocol is available.

Note

- ❒ Each of the names, in a TCP/IP protocol form (printer name) and in a NetBEUI protocol form, is changed individually. Comments are, however, common to both of them.
- ❒ The factory default name consists of "RNP" and the last 3 bytes of the MAC address of the network interface board. For example, when the MAC address is 00:00:74:62:7D:D5, the factory default name is "RNP627DD5". Comments are not configured.

SmartNetMonitor for Admin

1 Run SmartNetMonitor for Admin.

2 Click the [Group] menu, point to [Open LAN], and select [TCP/IP] or [IPX/SPX]. A list of printers appears.

Note

❒ Select the protocol of the printer you want to change the settings.

3 On the list, click to select the printer whose network interface board you want to change the settings.

4 From the [Tools] menu, select [NIB Setup Tool].

The NIB Setup Tool starts up.

5 Select [Property Sheet], and then click [OK].

TCP/IP

❶ Click the [General] tab, and then type the name into the [Device Name] box and comment into the [Comment] box.

- In the **[Device Name]** box, type the name of the printer within 47 characters. The factory default name consists of "RNP" and the last 3 bytes of the MAC address of the network interface board. For example, when the MAC address is 00:00:74:62:7D:D5, the factory default name is "RNP627DD5". No name of 9 characters is permitted if prefixed with "RNP". Also, when DHCP is selected as an IP address setting, the number of characters is limited to within 13 characters.
- In the **[Comment]** box, type any comment on printers within 31 characters.

NetBEUI

❶ **Click the [General] tab, and then type the comment into the [Comment] box.**

In the **[Comment]** box, type any comment on printers within 31 characters.

❷ **Click the [NetBEUI] tab.**

❸ **Type the name into the [Computer Name] box.**

- In the **[Computer Name]** box, type the name that helps you to identify printers using the NetBEUI protocol. The factory default name consists of "RNP" and the last 3 bytes of the MAC address of the network interface board. For example, when the MAC address is 00:00:74:62:7D:D5, the factory default name is "RNP627DD5". A maximum of 13 characters of capital English letters, numeric, or symbols (except "*+,/:;<=>?[\]|. and space) can be used. No name is permitted if prefixed with "RNP". You must avoid the duplication of the same name on a network.
- In the **[Comment]** box, type any comment on printers within 31 characters.

6 Click [OK].

The NIB Setup Tool exits, and the setting is transmitted to the printer.

7 Exit SmartNetMonitor for Admin.

Web Browser

1 Run the Web browser.

2 Type the address "http:// (IP address of the printer you want to change the settings)".

The status of the selected printer is displayed on the Web browser.

3 Click [Configuration].

A dialog box that prompts you to type the user name and password appears.

4 Type the user name and password, and then click [OK].

Type only the password in this dialog box. The factory default password is "password".

5 Change names and comments.

TCP/IP

❶ Click the [General] tab, and then type the name into the [Printer Name] box and comment into the [Comment] box.

- In the **[Printer Name]** box, type the name of the printer within 47 characters. The factory default name consists of "RNP" and the last 3 bytes of the MAC address of the network interface board. For example, when the MAC address is 00:00:74:62:7D:D5, the factory default name is "RNP627DD5". No name of 9 characters is permitted if prefixed with "RNP". Also, when DHCP is selected as an IP address setting, the number of characters is limited to within 13 characters.
- In the **[Comment]** box, type any comment on printers within 31 characters.

NetBEUI

❶ **Click [NetBEUI].**

❷ **Type the name into the [Computer Name] box and comment into the [Comment] box.**

- In the **[Computer Name]** box, type the name that helps you to identify printers using the NetBEUI protocol. The factory default name consists of "RNP" and the last 3 bytes of the MAC address of the network interface board. For example, when the MAC address is 00:00:74:62:7D:D5, the factory default name is "RNP627DD5". A maximum of 13 characters of capital English letters, numeric, or symbols (except "*+,/:;<=>?[\]|. and space) can be used. No name is permitted if prefixed with "RNP". You must avoid the duplication of the same name on a network.
- In the **[Comment]** box, type any comment on printers within 31 characters.

6 **Click [Apply].**

The setting is transmitted to the printer.

7 **Exit the Web browser.**

Displaying the Status of Printer

You can view the status of printers using SmartNetMonitor for Admin, SmartNetMonitor for Client, or Web browser.

SmartNetMonitor for Admin

1 Run SmartNetMonitor for Admin.

2 Click the [Group] menu, point to [Open LAN], and select [TCP/IP] or [IPX/SPX].

The status of printers is indicated with an icon in the list.

Note

❒ For more information about the status icons, see the Help file.

3 To get further information, click the desired printer to select from the list, and then click [Open] on the [Device] menu.

The status of the printer is displayed on a dialog box.

Note

❒ For more information about each item on the dialog box, see the Help file.

SmartNetMonitor for Client

To view the status of printers using SmartNetMonitor for Client, you must, in advance, configure SmartNetMonitor for Client so it monitors the printer whose status you want to view.

Monitoring Printers

1 Run SmartNetMonitor for Client.

The SmartNetMonitor for Client icon appears at the right end of the taskbar.

2 Right-click the SmartNetMonitor for Client icon, and check if the desired printer is configured on the pop-up menu that appears.

If it is configured, see p.66 “Displaying the Status of Printers”.

3 If the desired printer is not configured, click [Options] on the pop-up menu.

The **[SmartNetMonitor for Client - Options]** dialog box appears.

4 Click the printer to be monitored, and select the [To Be Monitored] check box from the [Monitoring Information Settings] group.

Note

- ❒ Selecting the **[Displayed on Task Bar]** check box will bring up the status of a printer with an icon on the SmartNetMonitor for Client icon on the task tray.

5 Click [OK].

The dialog box closes and the configured printer is monitored.

Displaying the Status of Printers

1 Run SmartNetMonitor for Client.

2 The status of printers is displayed on the SmartNetMonitor for Client icon on the task tray.

Note

- ❒ For more information about the status icons, see the Help file.

3 To get further information on the status, right-click the SmartNetMonitor for Client icon and click the desired printer.

The status of the printer is displayed on a dialog box.

Note

- ❒ For more information about each item on the dialog box, see the Help file.

Web Browser

1 Run the Web browser.

2 Type the address "http:// (IP address of the printer whose status you want to view)".

The status of the selected printer is displayed on the Web browser.

3 Click [Status] and you can check the status of the printer.

Note

- ❒ For more information about each item, see the Help file.

Menu Chart

This section describes how to change the default settings of the printer and provides information on the parameters included in each menu.

Category	Function menu	
Sample Print *1	Select Action / Error File(s)	
Locked Print *1	Select Action / Error File(s)	
Paper Input ⇒ p.73	Bypass Size	
	Tray Paper Size	
	Paper Type	
	Tray Locking	
	Tray Priority	
List/Test Print ⇒ p.80	Config. Page	
	Menu List	
	Color Demo Page	
	PS Config. Page	
	PCL Config.Page	
	Hex Dump	
Maintenance ⇒ p.87	Color Regist.	
	Image Density	
	Registration	Prt. Test Sheet
		Adjustment
	HDD Format	
	Menu Protect *2	

Category	Function menu	
System ⇒ p.93	MisfeedRecovery	
	Prt. Err Report	
	Auto Continue	
	Memory Overflow	
	Sub Paper Size	
	Page Size	
	Duplex	
	Output Tray	
	Job Separation	
	Energy Saver 1	
	Energy Saver 2	
	B&W Page Detect	
	Unit of Measure	
	Resolution	PCL
		PS3

Category	Function menu	
Host Interface ⇒ p.102	I/O Buffer	
	I/O Timeout	
	Network Setup	IP Address
		Subnet Mask
		Gateway Address
		Access Control
		Access Mask
		Network Boot
		Frame Type (NW)
		Active Protocol
		Ethernet
PCL Menu ⇒ p.109	Orientation	
	Form Lines	
	Font Source	
	Font Number	
	Point Size	
	Font Pitch	
	Symbol Set	
Language ⇒ p.115		

*1 The "Sample Print" menu and the "Locked Print" menu appear only when the optional Hard Disk Drive is installed.

*2 While the printer is **On Line**, press 【**Enter**】, and then press 【**Escape**】, finally press 【**Menu**】. You can access the "Menu Protect" on the panel display.

Accessing the Main Menu

Press 【Menu】, and "Menu" appears on the panel display.

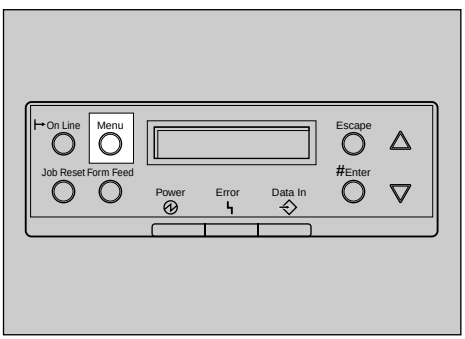

ZDJS001N

This menu shows the following 9 items which can be displayed one by one pressing 【▲】 or 【▼】.

- Sample Print
- Locked Print
- Paper Input
- List/Test Print
- Maintenance
- System
- Host Interface
- PCL Menu
- Language

Note

- ❒ If the optional Hard Disk Drive is not installed, the "Sample Print" menu and the "Locked Print" menu cannot be displayed on the operation panel.
- ❒ 【▼】: Press to go to the next page.
- ❒ 【▲】: Press to go back to the previous page.
- ❒ After making the printer settings, be sure to return to the previous menu by pressing 【**Escape**】.

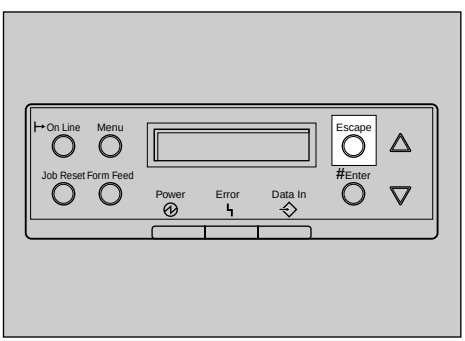

ZDJS024N

❒ After making the printer settings, press 【**On Line**】 to return to the "Ready " condition.

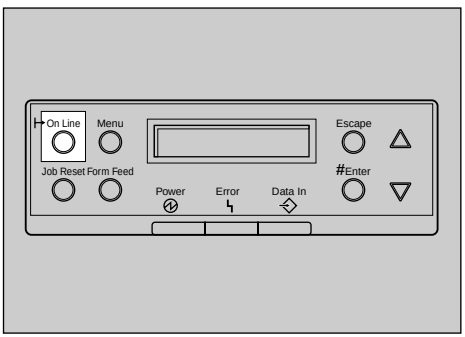

ZDJS022N

❒ The revised settings are not canceled even if the power switch is turned off.

Paper Input Menu

There are 5 menu items in the "Paper Input" menu.

- Bypass Size
- Tray Paper Size
- Paper Type
- Tray Locking
- Tray Priority

Reference

❒ For more information about loading paper in the tray, see the Setup Guide.

Paper Input Parameters

Menu	Description
Bypass Size	The paper size for the bypass tray. For more information about paper sizes that can be set in the bypass tray, see "*Paper and Other Media*" in Maintenance Guide 2.
Tray Paper Size	The paper size for Tray 2, optional tray 3 and tray 4. For more information about paper sizes that can be set in each tray, see Maintenance Guide 2. **Note** ❒ Only the installed trays appear on the panel display.

Menu	Description
Paper Type	If you use different kinds of paper, you set the paper type for Tray 1, Tray 2, Tray 3 or Bypass Tray. For more information about paper sizes that can be set in each tray, see Maintenance Guide 2. ❖ **Tray 1, Tray 2, Tray 3, Tray 4** Plain Paper, Recycled Paper, Special Paper, Color Paper, Letterhead, Preprinted, Prepunched, Bond Paper, Cardstock ❖ **Bypass Tray** Plain Paper, Recycled Paper, Special Paper, Color Paper, Letterhead, Preprinted, Prepunched, Bond Paper, Cardstock, Transparency, Thick Paper, Plain:Dup.Back, Thick:Dup.Back **Note** ❒ Default : Plain Paper ❒ Only the installed trays appear on the panel display.

Menu	Description
Tray Locking	If you use different kinds of paper, you can lock a tray to prevent printing on wrong paper such as letterhead or colored paper. When "Auto Select" is selected in the Paper Source selections from the printer driver, the locked tray will not be used. You can select each tray set to on or off. Tray 1, Tray 2, Tray 3, Tray 4 **Note** ❒ Default : Off ❒ Only the installed trays appear on the panel display. ❒ You can lock multiple trays. ❒ If you want to use the locked tray, you must select the tray from the printer driver. ❒ When a locked tray is selected from the printer driver, the printer does not search for another tray.
Tray Priority	You can set which tray should be checked first when "Auto tray Select" is selected in the Paper Source selections from the printer driver. When printing from DOS, the tray selected here is used when no tray is selected for a print job. Tray 1, Tray 2, Tray 3, Tray 4 **Note** ❒ Default : Tray 1 ❒ Only the installed trays appear on the panel display. ❒ It is recommended that you load paper of the size and direction you most frequently use in the tray selected with "Tray Priority".

Changing the Paper Input Menu

Tray Locking

1 Press 【Menu】.

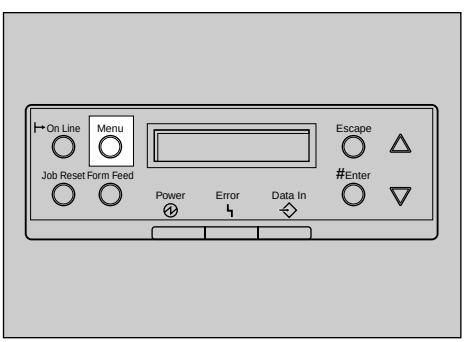

ZDJS001N

"Menu" appears on the panel display.

2 Press 【▲】 or 【▼】 to display "Paper Input", and then press 【Enter】.

```
Menu:
 Paper Input
```

3 **Press 【▲】 or 【▼】 to display "Tray Locking", and then press 【Enter】.**

```
Paper Input:
 Tray Locking
```

4 **Press 【▲】 or 【▼】 to display the tray to change the tray locking off, and then press 【Enter】.**

```
Tray Locking:
 Tray 1
```

Note

❒ Bypass Tray would not be locked.

5 **Press 【▲】 or 【▼】 to display "Off", and then press 【Enter】.**

```
Tray 1:
*Off
```

Wait for two seconds.

"Menu" appears on the panel display.

6 **Press 【On Line】.**

"Ready " appears on the panel display.

Tray Priority

1 **Press [Menu].**

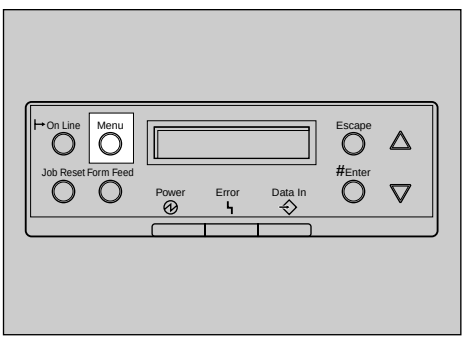

ZDJS001N

"Menu" appears on the panel display.

2 **Press [▲] or [▼] to display "Paper Input", and then press [Enter].**

```
Menu:
 Paper Input
```

3 **Press [▲] or [▼] to display "Tray Priority", and then press [Enter].**

```
Paper Input:
 Tray Priority
```

4 **Press [▲] or [▼] to select the tray type you want to use.**

5 Press [Enter]. Wait for two seconds.

"Menu" appears on the panel display.

6 Press [On Line].

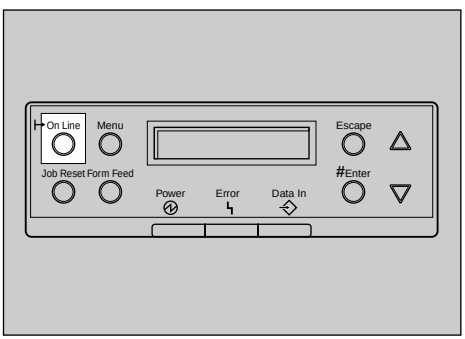

ZDJS022N

"Ready " message appears on the panel display.

```
Ready
```

List/Test Print Menu

There are 6 menu items in the "List/Test Print" menu.

- Config. Page
- Menu List
- Color Demo Page
- PS Config. Page
- PCL Config.Page
- Hex Dump

List/Test Print Parameters

Menu	Description
Config. Page	You can print the current configuration of the printer. See p.81 “Printing a Configuration Page”.
Menu List	You can print the Menu List which shows the function menus of this printer.
Color Demo Page	You can print the Color Demo Page.
PS Config. Page	You can print a list of the installed PS Fonts.
PCL Config.Page	You can print the current configuration of the PCL.
Hex Dump	You can print the Hex Dump.

Printing a Configuration Page

Reference

❒ For more information, see p.84 “Interpreting the Configuration Page”.

1 Press [Menu].

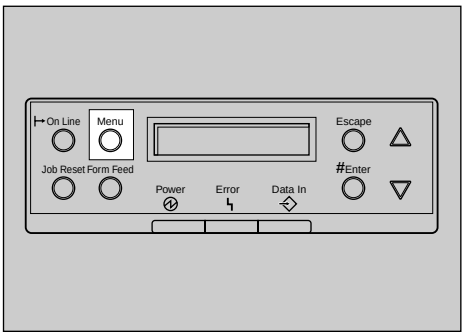

ZDJS001N

"Menu" appears on the panel display.

2 Press [▼] or [▲] to display "List/Test Print" menu.

```
Menu:
 List/Test Print
```

3 **Press [Enter].**

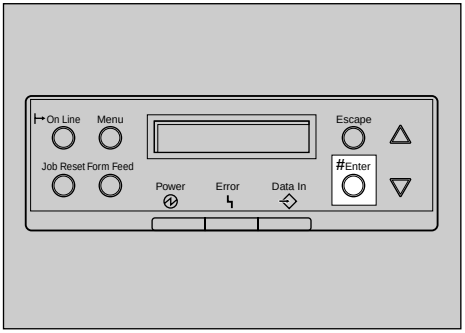

ZDJS021N

The following message appears on the panel display.

```
List/Test Print:
 Config. Page
```

4 **Press [Enter].**

The following message appears on the panel display.

```
Printing...
```

In a short time, the printing a configuration page will start.

Important

- ❒ If you cannot complete printing a configuration page correctly, make sure an error message appears on the panel display. For more information about error messages, see "*Troubleshooting*" in Maintenance Guide 2.

5 Press 【On Line】.

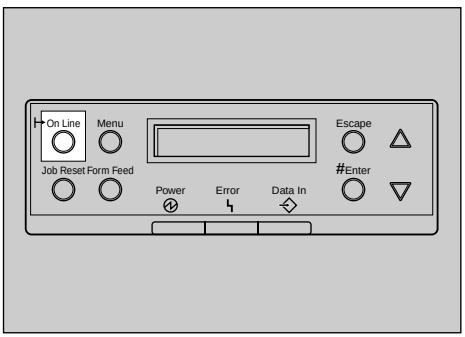

ZDJS022N

"Ready " message appears on the panel display.

```
Ready
```

Interpreting the Configuration Page

System Reference

❖ **Printer ID**
Shows the serial number assigned to the board by its manufacturer.

❖ **Firmware Version**
Shows the version number of the printer controller firmware.

❖ **Engine Version**
Shows the version number of the printer engine.

❖ **Pages Printed**
Shows the total number of pages printed by the printer to date.

❖ **NCS Version**
Shows the version number of the Network Interface Board.

❖ **Total Memory**
Shows the total amount of memory (SDRAM) installed on the printer.

❖ **Printer Language**
Shows the version number of the printer language.

❖ **Printer Hard Disk Drive**
Shows "Installed" when the Printer Hard Desk Drive is installed properly.

❖ IEEE 1394

Shows "Installed" when the IEEE 1394 Interface Unit Type 1045 is installed properly.

❖ Accounting Module

Shows "Installed" when the User Account Enhance Unit TypeB is installed properly.

❖ Options

Shows the options that you installed.

Paper Input

Shows the settings made under the "Paper Input" menu.

Reference

❒ For more information, see p.73 “Paper Input Menu”.

System

Shows the settings made under the "System" menu.

Reference

❒ For more information, see p.93 “System Menu”.

PCL Menu

Shows the settings made under the "PCL Menu".

Reference

❒ For more information, see p.109 “PCL Menu”.

Host Interface

Shows the settings made under the "Host Interface" menu.

When DHCP is active on the network, the actual IP Address, Subnet Mask and Gateway Address appear in parentheses on the configuration page.

Reference

❒ For more information about "Host Interface" menu, see p.102 “Host Interface Menu”.

Error Log

Shows the log of printer errors.

Maintenance Menu

There are 5 menu items in the "Maintenance" menu.

- Color Regist.
- Image Density
- Registration
- HDD Format
- Menu Protect

Note

❒ This "HDD Format" appears only when the Hard Disk Drive is installed. For more information, see "*Installing the Printer Hard Disk Type 3800C*" in the Setup Guide.

Maintenance Menu Parameters

Menu	Description
Color Regist.	You can adjust the color alignment for each color (CMYK) -7 to +7
Image Density	You can select the print image density. -3 to +3
Registration	❖ **Prt. Test Sheet** You can print the registration test sheet. Tray 3, Tray 4, Duplex.Backside **Note** ❒ Only the installed trays appear on the panel display. ❖ **Adjustment** You can select the start position for printing on page. Vert.:Tray 3, Vert.:Tray 4, Vert.:Dup.Bak -4 to +4 (by 0.5 mm) **Note** ❒ The registration value are not default. ❒ Only the installed trays appear on the panel display.

Menu	Description
HDD Format	You can format the Hard Disk Drive. Available when the Hard Disk Drive is installed. **Reference** ❒ For more information about formatting the Hard Disk Drive, see *"Installing the Hard Disk Type 3800C"* in the Setup Guide.
Menu Protect	This procedure lets you protect menu settings against accidental changes. It makes it impossible to change the menu settings you make with the normal procedure unless you perform the required key operation. In a network environment, protecting settings restricts changes to menu settings to network administrators. • Level 1 • Level 2 • Off **Note** ❒ While the printer is Online, press 【Enter】, and then press 【Escape】, finally press 【Menu】. You can access the "Menu Protect" menu on the panel display. ❒ You can protect the "Maintenance", "System", "Host Interface" and "Language" menu on Level 1. ❒ You can protect the "Paper Input", "Maintenance", "System", "Host Interface" and "Language" menu on Level 2.

Changing the Maintenance Menu

Protecting the menus

1 **Check if the On Line indicator is on. If not, press 【On Line】 to enter the "Ready " condition.**

2 **Press 【Enter】, then 【Escape】, and then 【Menu】.**

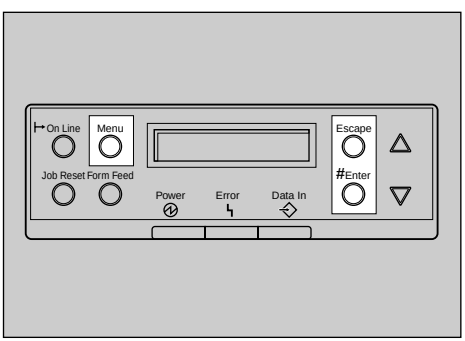

ZDJS025N

"Menu" appears on the panel display.

3 **Press 【▲】 or 【▼】 to display the "Maintenance" menu, and then press 【Enter】.**

The following message appears on the panel display.

```
Maintenance:
 Image Density
```

4 **Press [▲] or [▼] to display "Menu Protect".**

```
Maintenance:
 Menu Protect
```

5 **Press [Enter].**

The following message appears on the panel display.

```
Menu Protect:
*Off
```

6 **Press [▲] or [▼] to select the levels desired, and then press [Enter]. Wait for two seconds.**

"Menu" appears on the panel display.

7 **Press [On Line].**

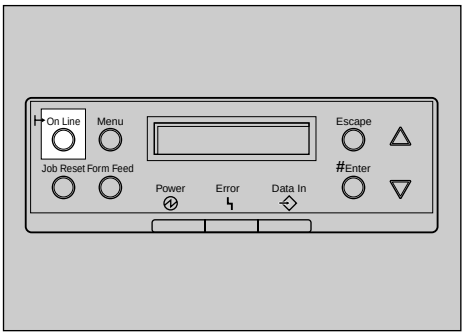

ZDJS022N

"Ready " message appears on the panel display.

```
Ready
```

Removing Protect

1 Check if the On Line indicator is on. If not, press [On Line] to enter the "Ready " condition.

2 Press [Enter], then [Escape], and then [Menu].

"Menu" appears on the panel display.

3 Press [▲] or [▼] to display "Maintenance" menu, and then press [Enter].

The following message appears on the panel display.

```
Maintenance:
 Image Density
```

4 Press [▲] or [▼] to display the "Menu Protect", and then press [Enter].

5 Press [▲] or [▼] to display "Off", and then press [Enter]. Wait for two seconds.

"Menu" appears on the panel display.

6 Press [On Line].

"Ready " message appears on the panel display.

System Menu

There are 14 menu items in the "System" menu.

- MisfeedRecovery
- Prt. Err Report
- Auto Continue
- Memory Overflow
- Sub Paper Size
- Page Size
- Duplex
- Output Tray
- Job Separation
- Energy Saver 1
- Energy Saver 2
- B&W Page Detect
- Unit of Measure
- Resolution

System Parameters

Menu	Description
MisfeedRecovery	You can select whether Misfeed Recovery is enabled. When it is on, printing restarts after the misfed paper has been cleared. • On • Off **Note** ❒ Default: On
Prt. Err Report	You can select whether or not to have a error report printed when a printer error or memory error occurs. • On • Off **Note** ❒ Default: Off

Menu	Description
Auto Continue	You can set whether Auto Continue is enabled. When it is on, printing continues after a system error occurs. • Off • 0 minute • 1 minute • 5 minutes • 10 minutes • 15 minutes **Note** ❒ Default: Off
Memory Overflow	You can select whether the memory overflow error report should be printed. • Not Print • Error Report **Note** ❒ Default: Not Print
Sub Paper Size	You can enable the Sub Paper Size feature. When you select "Auto", the printer substitutes the paper of a certain size which is to be an alternative if the paper currently specified is not loaded. When you select "Off", the printer uses the paper in the current specified paper input tray regardless of its size. • Auto • Off **Note** ❒ Default: Auto

Menu	Description
Page Size	You can specify the default paper size. 11 x 17, 8 1/2 x 14, 11 x 8 1/2, 8 1/2 x 11, 5 1/2 x 8 1/2, 7 1/4 x 10 1/2, 10 1/2 x 7 1/4, 8 x 13, 8 1/2 x 13, 8 1/4 x 13, A3 (297x420), B4 JIS(257x364), A4 (297 x 210), A4 (210 x 297), B5 JIS(257x182), B5 JIS(182x257), A5 (210 x 148), A5 (148 x 210), A6 (105 x 148), 8K (267x390), 16K (195 x 267), 16K (267 x 195), 4 1/8 x 9 1/2, 3 7/8 x 7 1/2, C5 Env (162x229), C6 Env (114x162), DL Env (110x220), Custom Size **Note** ❒ Default: Auto
Duplex	You can select whether you want to print on both sides of each page. • Off • Short Edge Bind • Long Edge Bind **Note** ❒ Default: Off ❒ This menu appears only when the optional Duplex Unit is installed.
Output Tray	You can select the default output tray. When you select "Auto Tray SW", the printer automatically changes to another output tray if the output tray become full. This function is available only when the Mailbox is installed. Standard Tray, External Tray, Mailbox Tray 2, Mailbox Tray 3, Finisher Tray 1, Finisher Tray 2, Auto Tray SW **Note** ❒ Default: Standard Tray ❒ Only the installed trays appear on the panel display.

Menu	Description
Job Separation	You can enable Job Separation. • Off • On **Note** ❒ Default: Off ❒ This menu appears only when the optional 2 Tray Finisher is installed.
Energy Saver 1	You can set On/Off for the Energy Save Mode level 1. This is preheat mode. • On • Off **Note** ❒ Default: On ❒ When the printer switches to Energy Saver mode, the **Power** indicator turns off, while the **On Line** indicator stays on.
Energy Saver 2	You can set how many minutes the printer wait before switching to Energy Saver mode. Energy Saver mode reduces electric power consumption. • On 5 minutes, 15 minutes, 30 minutes, 45 minutes, 60 minutes. • Off **Note** ❒ Default: On (60 minutes) ❒ When the printer switches to Energy Saver mode, the **Power** indicator turns off, while the **Online** indicator stays on and "Energy Save Mode " is displayed on the panel display.

Menu	Description
B&W Page Detect	You can specify whether the Black & White Page Detect feature is enabled. Even if color is specified for the printer driver Color Mode, every page will be printed in Black and White Mode if the print job is black and white. In this case, the consumables needed in the Color Mode will not be used. • On • Off **Note** ❒ Default: On ❒ If the print job contains a color page, the remaining pages will be printed in Color Mode even if some or all of them are black and white. ❒ If the first page of the print job is color and the remaining pages are black and white, the whole print job will be printed in Color Mode. ❒ Depending on the kind of data, the print job may not be done properly even if the function is specified.
Unit of Measure	You can select "mm" or "inch" for the custom paper size.
Resolution	You can set the print resolution in dots per inch. ❖ **PCL** 300 x 300 dpi, 600 x 600 dpi ❖ **PS** 600 x 600 dpi, 1200 x 600 dpi, 1200 x 1200 dpi **Note** ❒ Default: PCL 600 x 600 dpi, PS 600 x 600 dpi

Changing the System Menu

The following examples changing the settings for "Energy Saver 2".

1 Press [Menu].

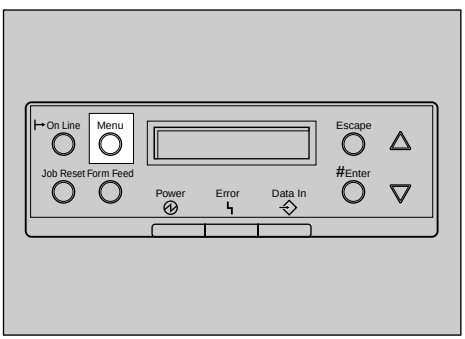

ZDJS001N

"Menu" appears on the panel display.

2 Press [▲] or [▼] to display "System".

```
Menu:
 System
```

3 **Press [Enter].**

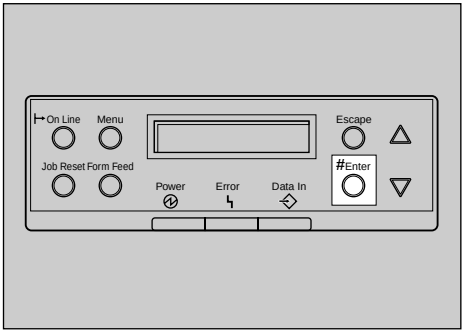

ZDJS021N

The following message appears on the panel display.

```
System:
 MisfeedRecovery
```

4 **Press [▲] or [▼] to display "Energy Saver 2", and press [Enter].**

```
System:
 Energy Saver 2
```

5 **Press [▲] or [▼] to display "E. Saver2 Timer", and press [Enter].**

The following message appears on the panel display.

```
Energy Saver 2:
 E. Saver2 Timer
```

6 Press 【▲】 or 【▼】 to select how many minutes the printer waits before switching to Energy Saver mode.

The following message appears on the panel display.

```
E. Saver2 Timer
*60 minutes
```

7 Press 【Enter】. Wait for two seconds.

"Menu" appears on the panel display.

8 Press 【On Line】.

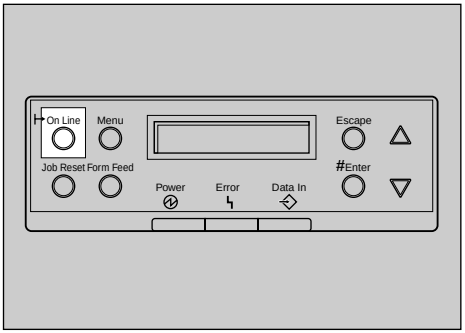

ZDJS022N

"Ready " message appears on the panel display.

```
Ready
```

Host Interface Menu

There are 3 menu items in the "Host Interface" menu.

- I/O Buffer
- I/O Timeout
- Network Setup

Note

❒ The "Network Setup" appears only when the optional Network Interface Board is installed. For more information about the "Network Setup", see "*Configuring the power for the Network with the Operation Panel*" in the Setup Guide.

Host Interface Parameters

Menu	Description
I/O Buffer	You can set the size of the I/O Buffer. Normally it is not necessary to change this setting. 128 KB, 256 KB, 512 KB **Note** ❒ Default: 128 KB
I/O Timeout	You can set how many seconds the printer should wait before ending a print job. If data from other port often appears in the middle of the print job, you should increase the timeout value. 10 seconds, 15 seconds, 20 seconds, 25 seconds, 60 seconds **Note** ❒ Default: 15 seconds

Menu	Description
Network Setup	❖ **IP Address** You can set the IP Address. **Note** ❒ Default: All zero **Reference** ❒ See *"Configuring the Printer for the Network with the Operation Panel"* in the Setup Guide. ❖ **Subnet Mask** You can set the Subnet Mask. **Note** ❒ Default: All zero **Reference** ❒ See *"Configuring the Printer for the Network with the Operation Panel"* in the Setup Guide. ❖ **Gateway Address** You can set the Gateway Address. **Note** ❒ Default: All zero **Reference** ❒ See *"Configuring the Printer for the Network with the Operation Panel"* in the Setup Guide.

Menu	Description
	❖ **Access Control** You can set the Access Control Address. **Note** ❒ Default: All zero ❖ **Access Mask** You can set the Access Control Mask. **Note** ❒ Default: All zero ❖ **Network Boot** You can set how the Network Interface Board acquires TCP/IP settings. **Note** ❒ Default: None **Reference** ❒ See *"Configuring the Printer for the Network with the Operation Panel"* in Administrator Reference 1. ❖ **Frame Type (NW)** You can set the Frame Type for NetWare. **Note** ❒ Default: Auto

Menu	Description
	❖ **Active Protocol** You can set the active protocol. TCP/IP, NetWare, NetBEUI, AppleTalk **Note** ❒ Default: All Active ❖ **Ethernet** You can select the speed of the network that the printer is connected to. Auto, 10 Mbps, 100 Mbps **Note** ❒ Default: Auto **Reference** ❒ See *"Configuring the Printer for the Network with the Operation Panel"* in Administrator Reference 1.

Changing the Host Interface Menu

The following example describes changing the setting for "I/O Timeout".

1 Press [Menu].

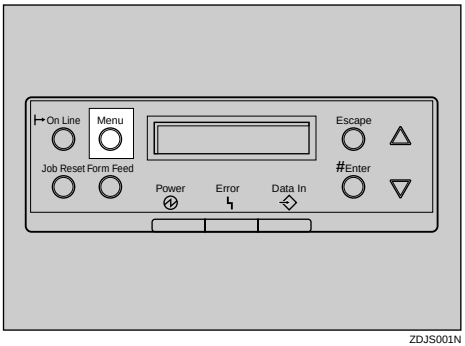

"Menu" appears on the panel display.

2 Press [▲] or [▼] to display the "Host Interface" menu.

```
Menu:
 Host Interface
```

3 **Press [Enter].**

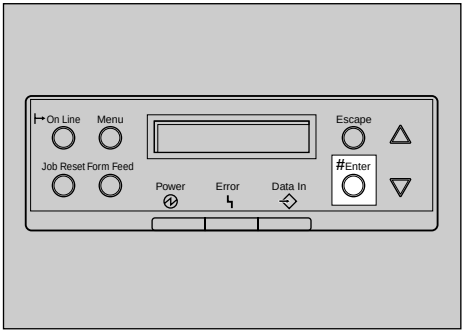

ZDJS021N

The following message appears on the panel display.

```
Host Interface:
 I/O Buffer
```

4 **Press [▲] or [▼] to display "I/O Timeout".**

```
Host Interface:
 I/O Timeout
```

5 **Press [Enter].**

The following message appears on the panel display.

```
I/O Timeout:
*15 seconds
```

6 **Press [▲] or [▼] to select how many minutes the printer waits before ending a print job.**

7 **Press [Enter]. Wait for two seconds.**

"Menu" appears on the panel display.

8 **Press [On Line].**

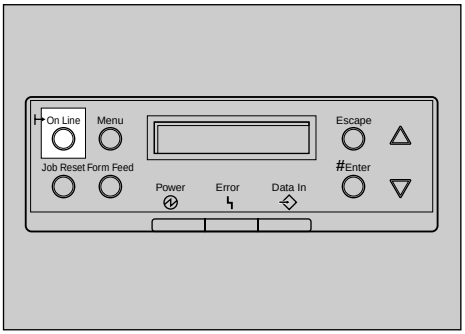

ZDJS022N

"Ready " message appears on the panel display.

```
Ready
```

PCL Menu

There are 7 menu items in the "PCL Menu".

- Orientation
- Form Lines
- Font Source
- Font Number
- Point Size
- Font Pitch
- Symbol Set

PCL Parameters

Menu	Description
Orientation	You can set the page orientation. • Portrait • Landscape **Note** ❒ Default: Portrait
Form Lines	You can set the number of lines per page. 5-128 **Note** ❒ Default: 64 (Metric version), 60 (Inch version)

Menu	Description
Font Source	You can set the location of the default font. • Resident • RAM • HDD **Note** ❒ Default: Resident ❒ When you select "RAM", you can select only fonts downloaded to printer RAM.
Font Number	You can set the ID of the default font you want to use. • 0 to 50 (for Internal) • 1 to n (for Download source) **Note** ❒ Default: Internal ❒ Default: 0
Point Size	You can set the point size you want to use for the default font. 4 to 999.75 by 0.25 **Note** ❒ Default: 12.00 ❒ This setting is effective only for a variable-space (proportional) font.

Menu	Description
Font Pitch	You can set the number of characters per inch you want to use for the default font. 0.44 to 99.99 by 0.01 **Note** ❒ Default: 10.00 ❒ This setting is effective only for a fixed-space (monospace) font.
Symbol Set	You can specify the set of print characters for the default font. The available options are as follows. Roman-8, ISO L1, ISO L2, ISO L5, PC-8, PC-8 D/N, PC-850, PC-852, PC8-TK, Win L1, Win L2, Win L5, Desktop, PS Text, VN Intl, VN US, MS Publ, Math-8, PS Math, VN Math, Pifont, Legal, ISO 4, ISO 6, ISO 11, ISO 15, ISO 17, ISO 21, ISO 60, ISO 69, Win 3.0 **Note** ❒ Default: Roman-8

Changing the PCL Menu

The following example describes changing the setting for "Orientation".

1 **Press [Menu].**

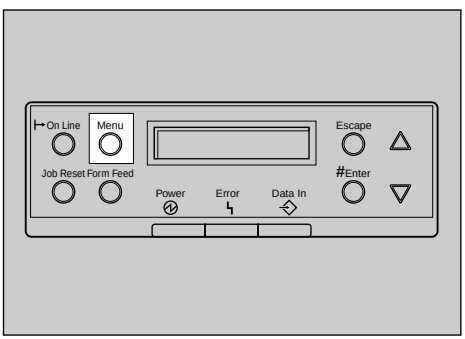

ZDJS001N

"Menu" appears on the panel display.

2 **Press [▲] or [▼] to display "PCL Menu", and then press [Enter].**

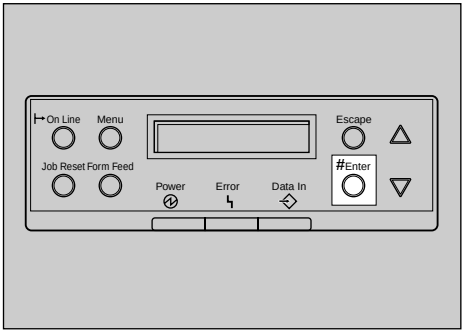

ZDJS021N

The following message appears on the panel display.

```
PCL Menu:
 Orientation
```

3 **Press [Enter].**

```
Orientation:
*Portrait
```

4 **Press [▲] or [▼] to select the orientation desired, and then press [Enter]. Wait for two seconds.**

"Menu" appears on the panel display.

5 Press 【On Line】.

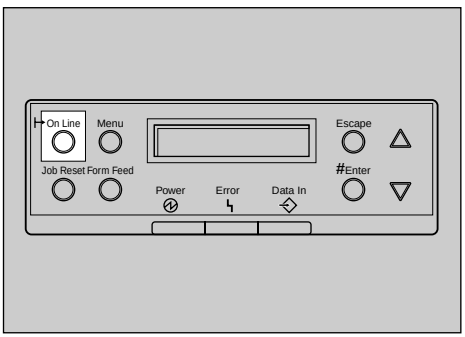

ZDJS022N

"Ready " message appears on the panel display.

```
Ready
```

Language Menu

You can select the language you use. Available language are as follows.

English, French, German, Italian, Spanish, Dutch, Swedish, Norwegian, Danish, Finnish, Portuguese, Czech, Polish and Hungarian.

Note

❒ Default: English

Changing the Language Menu

You can change the language by the following procedures below.

1 **Press [Menu].**

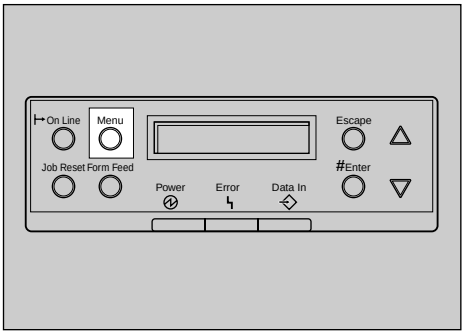

ZDJS001N

"Menu" appears on the panel display.

2 **Press [▲] or [▼] to display "Language".**

```
Menu:
 Language
```

3 **Press [Enter].**

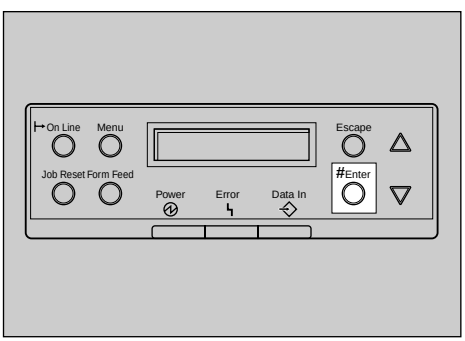

ZDJS021N

The following message appears on the panel display.

```
Language:
*English
```

4 **Press [▲] or [▼] until the language you want to select appears on the panel display.**

5 **Press [Enter]. Wait for two seconds.**

"Menu" appears on the panel display.

6 Press 【On Line】.

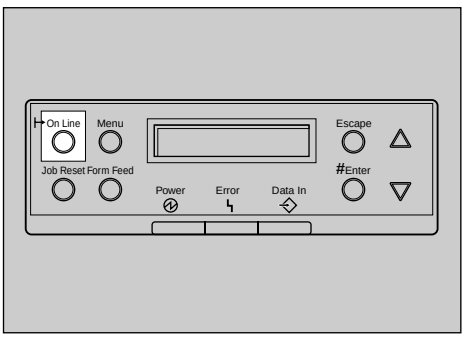

ZDJS022N

"Ready " message appears on the panel display.

```
Ready
```

Configuring the Printer using SmartNetMonitor for Admin

Using SmartNetMonitor for Admin, you can not only monitor the status of network printers but also allows you to change the configurations of the network interface board using the TCP/IP protocol or IPX/SPX protocol.

OS	Protocol Stack
Microsoft Windows 95/98/Me	TCP/IP provided with Windows 95/98/Me IPX/SPX provided with Windows 95/98/Me NetWare network client provided with Windows 95/98 Novell Client for Windows 95/98
Microsoft Windows 2000	TCP/IP provided with Windows 2000 IPX/SPX provided with Windows 2000 NetWare Client provided with Windows 2000 Novell Client for Windows NT/2000
Microsoft Windows NT4.0	TCP/IP provided with Windows NT IPX/SPX provided with Windows NT Client Service for NetWare provided with Windows NT Novell Client for Windows NT/2000

The following describes the method of changing the network interface board configuration.

Changing the Network Interface Board Configuration

1 Run SmartNetMonitor for Admin.

2 Click the [Group] menu, point to [Open LAN], and select [TCP/IP] or [IPX/SPX]. A list of printers appears.

Note

❒ Select the protocol of the printer you want to change the configure.

3 On the list, click to select the printer you want to change the configure.

4 From the [Tools] menu, select [NIB Setup Tool].

The NIB Setup Tool starts up.

5 Select [Wizard] or [Property Sheet], and then click [Next].

- When configuring the network interface board for the first time, select **[Wizard]**.
- When changing the configuration of the network interface board or configuring it in detail, select **[Property Sheet]**.

Selecting [Wizard]

❶ **Fill in the necessary items, and then click [Next].**

Selecting [Property Sheet]

❶ **A configuration list appears on the dialog box.**

For more information about each item on the dialog box, see the Help file.

Locking the Menus on the Printer's Operating Panel

1 Run SmartNetMonitor for Admin.

2 Click the [Group] menu, point to [Open LAN], and then select [TCP/IP] or [IPX/SPX].

A list of printer appears.

Note

- ❒ Select the protocol of the printer you want to change the configuration.

3 Click to select the desired printer.

4 From the [Tools] menu, select [Lock Menu of Device Option Panel].

The Web browser starts up, and the screen that prompts you to type the user name and a password appears.

5 Type the user name and password, and then click [OK].

The general configuration window appears.

6 From the [Lock Menu of Device Option Panel] pull down menu, select [Apply].

7 Click [Refresh].

8 Exit the Web browser.

Changing the Paper Type

1 Run SmartNetMonitor for Admin.

2 Click the [Group] menu, point to [Open LAN], and select [TCP/IP] or [IPX/SPX].

A list of printer appears.

Note

❒ Select the protocol of the printer you want to change the configuration.

3 On the list, click to select the printer whose paper type you want to change.

4 From the [Tools] menu, select [Paper Type Settings].

The Web browser starts up, and the screen that prompts you to type the user name and a password appears.

5 Type the user name and a password, and then click [OK].

The paper type configuration window appears.

6 Select the sheet type, and then click [Apply].

7 Exit the Web browser.

Managing the Number of Copies to be Printed

Preparation

❒ Optional User Account Enhance Unit TypeB must be installed to manage the number of copies to be printed. For more information about installing User Account Enhance Unit TypeB, see "*Installing the User Account Enhance Unit TypeB*" in the Setup Guide.

1 Run SmartNetMonitor for Admin.

2 Click the [Group] menu, point to [Open LAN], and then select [TCP/IP] or [IPX/SPX].

A list of printer appears.

Note

❒ Select the protocol of the printer you want to change the configuration.

3 On the list, click to select the printer whose statistics information you want to manage.

4 From the [Tools] menu, select [User Management Tool].

The screen that prompts you to type a password appears.

5 Type a password, and then click [OK].

Note

❒ The factory default password is "password".

The User Code Maintenance Tool starts up.

For more information about using the User Management Tool, see the Help file for SmartNetMonitor for Admin.

Configuring the Energy Save Mode

1 Run SmartNetMonitor for Admin.

2 Click the [Group] menu, point to [Open LAN], and select [TCP/IP] or [IPX/SPX].

A list of printer appears.

Note

- ❒ Select the protocol of the printer you want to change the configuration.

3 Click [Group], point to [Energy Save Mode], and select any energy saver mode from the menu that appears.

For more information about settings, see the Help file for SmartNetMonitor for Admin.

Configuring the Network Interface Board with a Web Browser

The Network Interface Board functions as a Web server in addition to allowing a printer to function as a network printer. You can use a Web Browser to view the printer status and configure the Network Interface Board.

❖ Configuring the printer

This requires the TCP/IP protocol to be installed. After the printer has been configured to use the TCP/IP protocol, it will be possible to adjust the settings using a Web Browser.

Reference

❒ For more information about configuring the printer to use the TCP/IP protocol, see Printer Client Reference 1 that comes with this printer.

❖ Operating system browser requirements

OS	Browser
Windows 95/98/Me	Microsoft Internet Explorer 3.02/4.0 or later Netscape Navigator 3.0/4.0 or later
Windows 2000	
Windows NT 4.0	
Mac OS 7.6.1 ~ 9.0	
Solaris 2.5 ~ 8	

Limitation

- ❒ Sometimes after clicking **[Back]** , the previous page may not appear. In this case, click **[Refresh]** or **[Reload]** .
- ❒ The text on the screen may disappear or be aligned incorrectly if the font size settings of the browser are too large. It is recommended that you use a font size equal to or smaller than "10 point" with Netscape Navigator, and "Medium" or smaller with Internet Explorer.

Going to the Top Page

After launching the Web Browser, type the IP address of the printer. See the example below. This example is for the English version.

http://192.168.15.16/

(In this example, the IP address of the Network Interface Board is 192.168.15.16.)

Note

- ❒ If a DNS server is used on the network, you can type the host name as an URL. For example, http://webmonitor.netprinter.com/. In order to do this, you must the register the IP address and host name of the Network Interface Board with the DNS server. Consult the network administrator for information about how to do this.
- ❒ If the network uses proxy servers, the browser may run slowly.

1. Header Buttons

You can register favorite URLs with **[URL]**. To view the Help section, click **[Help]**.

Important

- ❒ It costs to use the browser to access a website.

Note

- ❒ The Help file is stored in the following folder on the CD-ROM in HTML format. The third folder, "(Language)" may be substituted by an appropriate language name.

  \HELP\WSMHLP\(Language)

2. Menu Buttons

Buttons to configure the Network Interface Board and confirm the status of the printer.

Note

- ❒ When you click **[Network Config]**, a dialog box appears requesting the user name and password. Type only the password in this dialog box. The factory default password is "password".
- ❒ The password is the same as that used for remote maintenance and that used in the NIB Setup Tool. If you change a password with the Web Browser, the other passwords are also changed.

3. Status

Displays the name and comments of the Network Interface Board, and the printer status.

Linking the address (URL) to the [Help] button

You can link the address (URL) of the **[Help]** button to the Help files on the computer or on a Web server.

① Copy the Help files on the CD-ROM to the desired location. The Help files are located in folders labeled with abbreviated language names. For example, English Help files are in the **[EN]** folder. Be sure to copy the entire **[EN]** folder to the new location.

② Using a Web Browser, navigate to the Top Page and click **[Network config]**.

③ Type your password, (it is not necessary to type a user name) and click **[OK]**.

④ Type the path to the Help files in the **[Help URL]** box.
If you copied the Help files to "C:\HELP\EN", type "file://C:/HELP/". For example if you copied the files to a web server and the index URL is "http://a.b.c.d/HELP/EN/index.html", type "http://a.b.c.d/HELP/".

⑤ Click **[Apply]**.
When a warning message appears, select to continue configuration.

SNMP

The Network Interface Board functions as a SNMP (Simple Network Management Protocol) agent using the UDP and IPX protocols. Using the SNMP manager you can get information about the printer.

The factory default community names are "public" and "admin". You can get MIB information using these community names.

Reference

❒ For more information about configuring the community name, see p.138 “SNMP” in "Remote Maintenance by telnet".

Limitation

❒ The kinds of supported MIBs differ depending on the printer.

❖ Supported MIBs

- MIB-II
- PrinterMIB
- HostResourceMIB
- RicohPrivateMIB

Remote Maintenance by telnet

You can view the printer status and configure the Network Interface Board using telnet.

Note

- ❒ You should specify a password so that only the network administrator, or a person having network administrator privileges, can use remote maintenance.

Using telnet

The following is a sample procedure in using telnet.

Limitation

- ❒ Only one person at a time can be logged on to do remote maintenance.

1 Using the IP address or host name of the printer, start telnet.

```
% telnet IP_address
```

Note

- ❒ In order to use the host name instead of the IP address, you must write it to the /etc/hosts file.

2 Type the password.

Note

- ❒ The factory default is "password".

3 Type a command.

Reference

- ❒ For more information about telnet commands, see p.130 “Commands List”.

4 **Exit telnet.**

```
msh> logout
```

When the configuration is changed, a confirmation message requests whether or not the changes should be saved.

5 **Type "yes" to save the changes, and press 【ENTER】.**

If you do not want to save the changes, type "no" and press 【ENTER】. If you want to make additional changes, type "return" at the command line, and press 【ENTER】.

Note

- ❒ If the "Can not write NVRAM information" message appears, the changes are not saved. Repeat the steps above.
- ❒ The Network Interface Board is reset automatically when the settings are changed.
- ❒ When the Network Interface Board is reset, the active print job which has already been sent to the printer will finish printing. However, jobs that have not been sent yet will be canceled.

Commands List

This is a list of commands that can be used via remote maintenance.

Note

- ❒ Type "help" to see a list of commands that can be used.

```
msh> help
```

- ❒ Type "help command_name" to display information about the syntax of that command.

```
msh> help command_name
```

TCP/IP address

Use the ifconfig command to configure TCP/IP for the printer (IP address, subnet mask, broadcast address, default gateway address).

❖ Reference

msh> ifconfig

❖ Configuration

msh> ifconfig naf0 *parameter address*

Parameter	Meaning
(no parameter)	IP address
netmask	subnet mask
gateway	default gateway address
broadcast	broadcast address

The following is an example for configuring an IP address of 192.168.15.16.

msh> ifconfig naf0 192.168.15.16

The following is an example for configuring a subnet mask of 255.255.255.0.

msh> ifconfig naf0 netmask 255.255.255.0

Note

- ❒ This affects the configuration of the Network Interface Board of the IP address that is used.
- ❒ To type an address using hexadecimal, prefix it by "0x".

Address

❖ Subnet Mask

A number used to mathematically "mask" or hide the IP address on the network by eliminating those parts of the address that are alike for all the machines on the network.

❖ Default Gateway Address

A gateway is a connection or interchange point that connects two networks. A gateway address is for the router or host computer used as a gateway.

Note

❒ To get the above addresses, contact your network administrator.

Access Control

Use the access command to view and configure access control.

❖ Reference

```
msh> access
```

❖ Configuration

```
msh> access parameter address
```

Parameter	Meaning
control	Access Control Address
mask	Access Control Mask

Note

- The Access Control Address and the Access Control Mask are used to limit access to the computer used for printing by denying access to users based on their IP address. If it is not necessary to limit access, set the Access Control Mask to "0.0.0.0".
- When the Access Control Address matches the masked result of the IP address computer attempting to print, print jobs from that IP address will be accepted by the Network Interface Board.
- For example, if you assign 192.168.15.16 as the Access Control Address of the Network Interface Board, the IP addresses that can print are as follows. XXX means any number from 1 to 254 is acceptable.

Access Control Mask	IP addresses that can access the printer
0. 0. 0. 0	XXX.XXX.XXX.XXX
255. 0. 0. 0	192.XXX.XXX.XXX
255.255. 0. 0	192.168.XXX.XXX
255.255.255. 0	192.168. 15.XXX
255.255.255.255	192.168. 15. 16

Network Boot

Use the set command to configure the boot method.

msh> set *parameter* {on | off}

"on" means active and "off" means inactive.

Parameter	Meaning
dhcp	DHCP (Dynamic Host Configuration Protocol)

Note

- ❒ When you use DHCP, the server also needs to be configured.
- ❒ DHCP takes precedence over all other settings.

Protocol

Use the set command to allow/prevent remote access for each protocol.

msh> set *protocol* {up | down}

Protocol	
appletalk tcpip netware netbeui lpr ftp rsh diprint web snmp ipp	"up" means active and "down" means inactive.

Note

- ❒ If you prohibit remote access using TCP/IP and then log out, you cannot use remote access. If this was a mistake, you can use the printer operation panel to allow access by TCP/IP.
- ❒ When you prevent access via TCP/IP, you are also prevented from using lpr, ftp, rsh, diprint, web, snmp and ipp.

Printer status

The following commands can be used to get information about the current status of the printer.

msh> *command*

Command	Information that is displayed
status	Status of printer. Information about the print jobs.
info	Information about the paper tray, output tray, printer language of printer.
prnlog [ID]	Lists the last 16 print jobs.

Note

- ❒ More information about any print job is displayed when the ID number is added after the prnlog command.

Reference

- ❒ For more information about the meaning of the data returned with these commands, see p.130 “Commands List”.

Network Interface Board configuration settings information

Use the show command to display the Network Interface Board configuration settings.

```
msh> show [-p]
```

Note

- ❒ Add "-p" to the show command to have the information displayed one screen at a time.

Reference

- ❒ For more information about the meaning of the data returned with this command, see p.130 “Commands List”.

System log information

Use the syslog command to display information stored in the printer's system log.

```
msh> syslog
```

Reference

- ❒ For more information about the displayed information, see p.130 “Commands List”.

SNMP

Use the snmp command to display and edit SNMP configuration settings such as the community name.

Note

- ❒ You can configure from ten SNMP access settings numbered 1–10.
- ❒ Default access settings 1 and 2 are as follows.

Number	1	2
Community name	public	admin
IP address	0.0.0.0	0.0.0.0
Access type	read-only trap off	read-write trap off

❖ Display

Shows the SNMP information and available protocols.

```
msh> snmp ?
msh> snmp [-p] [registered_number]
```

Note

- ❒ If the -p option is added, you can view the settings one by one.
- ❒ Omitting the number displays all access settings.

❖ Community name configuration

You can set the community name of the Network Interface Board.

```
msh> snmp number name community_name
```

Note

- ❒ The community name must consist of 15 characters or less.

❖ Access type configuration

You can select the access type from those listed below.

msh> snmp *number* type *access_type*

Access type	Type of access which is permitted
read	Read only
write	Read and write
trap	User is notified of trap messages.
no	All access is denied.

❖ Protocol configuration

You should use the following command to set the protocols to active or inactive. If you set a protocol to inactive, all access settings set to use that protocol are disabled.

msh> snmp {ip | ipx} {on | off}

- "on" means active and "off" means inactive

To change the protocol of an access settings, use the following command. However, if you disabled a protocol with the above command, making it active here will have no effect.

msh> snmp *number* active {ip | ipx} {on | off}

❖ Access configuration

You can configure an address of a host depending on the protocols used.
The Network Interface Board accepts requests only from hosts having addresses with access types of "read-only" or "read-write". Type "0" to have the Network Interface Board accept requests from any host without requiring a specific type of access.

Command syntax:

msh> snmp *number* {ip | ipx} *address*

Note

- ❒ To specify the TCP/IP protocol, type ip followed by a space and then the IP address.
- ❒ To specify the IPX/SPX protocol, type ipx followed by a space and then the IPX address followed by a decimal and then the MAC address of the Network Interface Board.

The following is an example of how to configure registration number 3 with the IP address 192.168.15.16.

msh> snmp 3 ip 192.168.15.16

The following is an example of how to configure registration number 3 with the IPX address 7390A448, and the MAC address 00:00:74:62:5C:65.

msh> snmp 3 ipx 7390A448:000074625C65

IPP

Use the ipp command to configure the IPP settings.

❖ Viewing setting

The following command displays the current IPP settings.

```
msh> ipp
```

Example output:

```
timeout=900(sec)
auth basic
```

- The "timeout" setting specifies how many seconds the computer keeps trying to access the network printer to send print jobs when no connection could be made.
- The "auth" setting indicates the user authorization mode.

❖ IPP timeout configuration

Specify how many seconds to wait before canceling a print job if it has been interrupted for some reason. The range of time can be changed between 30 to 65535 seconds.

```
msh> ipp timeout {30 -65535}
```

❖ IPP user authorization configuration

Use the IPP user authorization to restrict users that can print with IPP. The factory default is "off" .

```
msh> ipp auth {basic|digest|off}
```

- "basic" and "digest" are user authorization setting.
- "off" removes a user's authorization.

Note

❒ If you select "basic" or "digest", see next section "*Configuring IPP user authorization*" for how to configure the user name. Up to ten user names are available.

❖ Configuring IPP user authorization

Use the following command:

```
msh> ipp user
```

The following message appears.

```
msh> Input user number (1 to 10):
```

Type the number, user name and password.

```
msh> IPP user name:user1
msh> IPP password:*******
```

After configuring the settings, the following message appears.

```
User configuration changed.
```

SMB

Use the smb command to configure or delete the computer name or workgroup name for NetBEUI.

msh >smb *parameter*

Parameter	Settings
smb comp	Your computer name consisting of up to 13 characters
smb group	Workgroup name consisting of up to 15 characters
smb comment	Comment consisting of up to 31 characters
smb clear comp	Clears complete name
smb clear group	Clears Workgroup name
smb clear comment	Clears comment

ROUTE

Use the route command to control the routing table.

This command allows you to configure and display routing information. You can change the network configuration from remote PC using this command.

Note

❒ The maximum number of routing tables are 16.

Parameter	Topics of setting
route add {host | net} destination gateway	Adds a host/network route to "destination", and a gateway address to "gateway" in the table. Host becomes the default setting.
route delete {host | net} destination	Deletes a host/network route from the table. Host becomes the default setting.
route get {destination }	Displays only route information corresponding to a specified destination. When the destination is unspecified, all routing information is displayed.
route active {host | net} destination *1 on/off	You can turn the specified destination on or off. Host becomes the default setting.
route flush	Deletes all routing information.

*1 IP address

SLP

Use this command to configure SLP settings.

You can search the NetWare server using SLP in the PureIP environment of NetWare5. To use the slp command, you can configure the value of TTL which can be used by SLP multi-cast-packet.

Note

- ❒ The default value of TTL is "1". A search is executed only within a local segment. If the router does not support multi-cast, the settings are not available even if the TTL value is increased.
- ❒ The acceptable TTL value is 1 - 255.

```
msh> slp ttl {1 -255}
```

Changing the password

Use the passwd command to change the remote maintenance password.

Important

- ❒ Be sure not to forget or lose the password.

Note

- ❒ The default factory password is "password".

1 **Type "passwd".**

```
msh> passwd
```

2 **Type the current password.**

```
Old password:
```

3 **Type the new password.**

```
New password:
```

Note

- ❒ The password must consist of 3 to 8 alphanumeric characters and symbols. Upper and lower case characters are considered unique. For example, R is different from r.
- ❒ The password is the same as that used in the configuration of the Network Interface Board using a Web Browser and that used in the NIB Setup Tool. If you change a password from telnet, the other passwords are also changed.

4 **Type the new password once again.**

```
Retype new password:
```

Getting Printer Information over the Network

Printer current status

You can check the printer's status using the telnet command.

❖ telnet

Use the status command.

Messages	Description	Comments
Call Service Center	There is a malfunction in the printer.	Turn the printer off and on.
Call Service Center: SC***-*	An error has occurred in the printer.	First, turn the power switch off and then on. If the message appears again, call your sales or service representative.
Cover Open: Duplex Unit	The cover of the optional Duplex Unit is open.	Close the cover of the optional Duplex Unit.
Cover Open: Front Cover	Close the front cover.	Close the front cover.
Cover Open: Mailbox	The cover of the Mailbox is open.	Close the cover of the Mailbox cover.
Empty: Black Toner	The toner cartridge is empty.	Replace the new toner cartridge.
Empty: Cyan Toner	The toner cartridge is empty.	Replace the new toner cartridge.
Empty: Magenta Toner	The toner cartridge is empty.	Replace the new toner cartridge.
Empty: Yellow Toner	The toner cartridge is empty.	Replace the new toner cartridge.
Energy Saver Mode	The printer is in Energy Save Mode.	Wait for a while.

Messages	Description	Comments
Error: Command Transmission	An error has occurred in the engine or controller.	First, turn the power switch off and then on. If the message appears again, call your sales or service representative.
Error: DIMM Value	An error has occurred in the DIMM.	First, turn the power switch off and then on. If the message appears again, call your sales or service representative.
Error: Ethernet Board	An error has occurred in the Network Interface Board.	First, turn the power switch off and then on. If the message appears again, call your sales or service representative.
Error: HDD Board	An error has occurred in the optional Hard Disk Drive.	First, turn the power switch off and then on. If the message appears again, call your sales or service representative.
Error: IEEE 1394 Board	An error has occurred in the optional 1394 Interface Unit.	First, turn the power switch off and then on. If the message appears again, call your sales or service representative.
Error: Memory Switch	An error has occurred in printer.	First, turn the power switch off and then on. If the message appears again, call your sales or service representative.
Error: Optional RAM	An error has occurred in the optional Memory Unit.	First, turn the power switch off and then on. If the message appears again, call your sales or service representative.

Messages	Description	Comments
Error: Parallel I/F Board	An error has occurred in the parallel interface board.	First, turn the power switch off and then on. If the message appears again, call your sales or service representative.
Full: Finisher	All output trays of the optional Finisher are full.	Remove paper from the Finisher.
Full: Finisher Tray 1	Output tray 1 of the optional Finisher is full.	Remove paper from the Finisher.
Full: Finisher Tray 2	Output tray 2 of the optional Finisher is full.	Remove paper from the Finisher.
Full: Hole Punch Receptacle	Hole Punch Receptacle of the optional Finisher is full.	Remove Hole Punch Receptacle from the Finisher.
Full: Mailbox	All output trays of the optional Mailbox are full.	Remove paper from the Mailbox.
Full: Mailbox Tray 1	The output tray 1 of the optional Mailbox is full.	Remove paper from the output tray 1 of the optional Mailbox.
Full: Mailbox Tray 2	The output tray 2 of the optional Mailbox is full.	Remove paper from the output tray 2 of the optional Mailbox.
Full: Mailbox Tray 3	The output tray 3 of the optional Mailbox is full.	Remove paper from the output tray 3 of the optional Mailbox.
Full: Mailbox Tray 4	The output tray 4 of the optional Mailbox is full.	Remove paper from the output tray 4 of the optional Mailbox.
Full: Output Tray(s)	All output trays are full.	Remove paper from all output trays.
Full: Standard Tray	The standard tray is full.	Remove paper from standard trays.

Messages	Description	Comments
Full: Waste Toner	The waste toner is full	Replace a new waste toner.
Hex Dump Mode	The printer is in Hex Dump Mode.	Wait for a while. If the "Hex Dump Mode" message does not change, on the panel display press 【On Line】 to return to the "Ready " condition.
Low: Black Toner	The toner cartridge is not set correctly or toner is almost running out.	Set the toner cartridge correctly.
Low: Cyan Toner	The toner cartridge is not set correctly or toner is almost running out.	Set the toner cartridge correctly.
Low: Magenta Toner	The toner cartridge is not set correctly or toner is almost running out.	Set the toner cartridge correctly.
Low: Yellow Toner	The toner cartridge is not set correctly or toner is almost running out.	Set the toner cartridge correctly.
Low: Staples	The staple is not set correctly or staple is almost running out.	Set the staple cartridge correctly.
Malfunction: Duplex Unit	An error has occurred in the optional Duplex Unit.	First, turn the power switch off and then on. If the message appears again, call your sales or service representative.
Malfunction: Finisher	An error has occurred in the optional Finisher.	First, turn the power switch off and then on. If the message appears again, call your sales or service representative.
Malfunction: Input Tray(s)	An error has occurred in the Input Tray(s).	First, turn the power switch off and then on. If the message appears again, call your sales or service representative.

Messages	Description	Comments
Malfunction: Output Shift	An error has occurred in the output tray when use the output shift feature.	First, turn the power switch off and then on. If the message appears again, call your sales or service representative.
Malfunction: Punch Unit	An error has occurred in the optional Punch Unit.	First, turn the power switch off and then on. If the message appears again, call your sales or service representative.
Malfunction: Stapler	An error has occurred in the optional Staple Unit.	First, turn the power switch off and then on. If the message appears again, call your sales or service representative.
Malfunction: Tray 1	An error has occurred in the tray 1.	First, turn the power switch off and then on. If the message appears again, call your sales or service representative.
Malfunction: Tray 2	An error has occurred in the tray 2.	First, turn the power switch off and then on. If the message appears again, call your sales or service representative.
Malfunction: Tray 3	An error has occurred in the tray 3.	First, turn the power switch off and then on. If the message appears again, call your sales or service representative.
Malfunction: Upper Tray 4	An error has occurred in the tray 4.	First, turn the power switch off and then on. If the message appears again, call your sales or service representative.

Messages	Description	Comments
Mismatch: Paper Size	The paper size setting of the tray differs from that of actual paper size in the tray.	Load paper of the indicated paper size into the paper tray being used. See "*Paper and Other Media*" in Maintenance Guide 2.
Mismatch: Paper Size and Type	The paper type setting of the tray differs from that of actual paper type in the tray.	Load paper of the indicated paper size and type into the paper tray being used. See "*Paper and Other Media*" in Maintenance Guide 2.
Mismatch: Paper Type	The paper type setting of the tray differs from that of actual paper type in the tray.	Load paper of the indicated paper type into the paper tray being used. See "*Paper and Other Media*" in Maintenance Guide 2.
Nearly Full: Waste Toner Bottle	The waste toner is full nearly	Replace a new waste toner.
No Paper: Bypass Tray	There is no paper in the bypass tray.	Load paper into the bypass tray. See Maintenance Guide 2.
No Paper: Input Tray(s)	There is no paper in the paper tray.	Load paper into the paper tray. See Maintenance Guide 2.
No Paper: Selected Tray	There is no paper in the current tray.	Load paper into the current tray. See Maintenance Guide 2.
No Paper: Tray 1	There is no paper in the paper tray (Tray1).	Load paper into the bypass tray.See Maintenance Guide 2.
No Paper: Tray 2	There is no paper in the optional Paper Feed Unit (Tray2).	Load paper into the bypass tray. See Maintenance Guide 2.
No Paper: Tray 3	There is no paper in the optional Paper Feed Unit (Tray3).	Load paper into the bypass tray. See Maintenance Guide 2.

Messages	Description	Comments
No Paper: Tray 3(LCT)	There is no paper in the optional LCT (Tray3).	Load paper into the bypass tray. See Maintenance Guide 2.
No Paper: Tray 4	There is no paper in the optional Paper Feed Unit (Tray4).	Load paper into the bypass tray. See Maintenance Guide 2.
No Paper: User Selected Tray	There is no paper in the selected tray.	Load paper into the selected tray. See Setup Guide.
Not Detected: Duplex Unit	The optional Duplex Unit is not set correctly.	Set the optional Duplex Unit correctly. If the message appears again, call your sales or service representative.
	An error has occurred in the Duplex Unit.	
Not Detected: Fusing Unit	The fusing unit is not set correctly.	Set the fusing unit correctly. If the message appears again, call your sales or service representative.
Not Detected: Input Tray(s)	The input tray is not set correctly.	Set the input tray correctly. If the message appears again, call your sales or service representative.
Not Detected: Black Toner	The toner cartridge is not set correctly.	Set the toner cartridge correctly. If the message appears again, call your sales or service representative.
Not Detected: Cyan Toner	The toner cartridge is not set correctly.	Set the toner cartridge correctly. If the message appears again, call your sales or service representative.
Not Detected: Magenta Toner	The toner cartridge is not set correctly.	Set the toner cartridge correctly. If the message appears again, call your sales or service representative.

Messages	Description	Comments
Not Detected: Yellow Toner	The toner cartridge is not set correctly.	Set the toner cartridge correctly. If the message appears again, call your sales or service representative.
Not Detected: Tray 1	The paper tray (Tray 1) is not set correctly.	Set the paper tray (Tray 1) correctly. If the message appears again, call your sales or service representative.
Not Detected: Tray 2	The paper tray (Tray 2) is not set correctly.	Set the paper tray (Tray 2) correctly. If the message appears again, call your sales or service representative.
Not Detected: Tray 3	The optional Paper Feed Unit (Tray 3) is not set correctly.	Set the optional Paper Feed Unit (Tray 3) correctly. If the message appears again, call your sales or service representative.
Not Detected: Tray 3(LCT)	The optional LCT (Tray 3) is not set correctly.	Set the optional LCT (Tray 3) correctly. If the message appears again, call your sales or service representative.
Not Detected: Tray 4	The optional Paper Feed Unit (Tray 4) is not set correctly.	Set the optional Paper Feed Unit (Tray 4) correctly. If the message appears again, call your sales or service representative.
Not Detected: User Selected Tray	The selected tray is not set correctly.	Set the selected tray correctly. If the message appears again, call your sales or service representative.
Offline	The printer is Offline.	If you want to change into On Line, press 【**On Line**】.

Messages	Description	Comments
On Line	The printer is Online.	You can print the job data.
Online		
Paper in Finisher	There is paper in the optional Finiser.	Remove the paper. See Maintenance Guide 2.
Paper Misfeed: Duplex Unit	There is misfeed in the Duplex Unit.	Remove the misfed paper. See Maintenance Guide 2.
Paper Misfeed: Front Cover	There is misfeed in the printer.	Remove the misfed paper. See Maintenance Guide 2.
Paper Misfeed: Input Tray	There is misfeed in the printer.	Remove the misfed paper. See Maintenance Guide 2.
Paper Misfeed: Mailbox	There is misfeed in the Mailbox.	Remove the misfed paper.
Paper Misfeed: Output Tray	There is misfeed in output tray.	Remove the misfed paper.
Printing...	---	Wait for a while.
Warming Up/Adjusting...	The printer is warming up or toner is being supplied.	Wait until the panel display change the "Ready ".

Printer configuration

You can check the printer configuration using telnet.

❖ telnet

Use the info command.

Note

❒ "*" (asterisk) is displayed with the current setting.

❒ Regarding *1 - *5, see below table.

Item	Description
Input Tray	
No.	ID number of the paper tray
Name	Name of the paper tray*1
PaperSize	Paper size loaded in the paper tray*2
Status	Current status of the paper tray*3
Output Tray	
No.	ID number of the output tray
Name	Name of the output tray*4
Status	Current status of the output tray*5
Printer Language	
No.	ID number of the printer language used by the printer
Name	Name of the printer language used in the printer
Version	Version of the printer language

❖ *1 Input Tray: Name

Name	Description
Tray X	Name of installed paper tray. (X is the number of tray.)
Bypass Tray	Bypass Tray

❖ *2 Input Tray: Paper Size

Paper Size	Description
A3 (297 × 420 mm)	A3 (297 × 420)
B4JIS (257 × 364 mm)	B4 (257 × 364)
A4 (297 × 210 mm)	A4 (297 × 210)
A4 (210 × 297 mm)	A4 (210 × 297)
B5JIS (257 × 182 mm)	B5 (257 × 182)
B5JIS (182 × 257 mm)	B5 (182 × 257)
A5 (210 × 148 mm)	A5 (210 × 148)
A5 (148 × 210 mm)	A5 (148 × 210)
A6 (105 × 148 mm)	A6 (105 × 148)
11 × 17	DL (11 × 17)
8 1/2 × 14	LG (8 $^{1}/_{2}$ × 14)
11 × 8 1/2	LT (11 × 8 $^{1}/_{2}$)
8 1/2 × 11	LT (8 $^{1}/_{2}$ × 11)
5 1/2 × 8 1/2	HL (5 $^{1}/_{2}$ × 8 $^{1}/_{2}$)

Paper Size	Description
Custom(XXXxYYY mm)	Custom Size
10 1/2 × 7 1/4	10 $^{1}/_{2}$ × 7 1/4
7 1/4 × 10 1/2	7 $^{1}/_{4}$ × 10 $^{1}/_{2}$
8 1/4 × 13	8 $^{1}/_{4}$ × 13
8 1/2 × 13	8 $^{1}/_{2}$ × 13
4 1/8 × 9 1/2	4 $^{1}/_{8}$ × 9 $^{1}/_{2}$
3 7/8 × 7 1/2	3 $^{7}/_{8}$ × 7 $^{1}/_{2}$
DL (110 × 220 mm)	DL (110 × 220)
C5 Env (162 × 229 mm)	C5 Env (162 × 229)
8 × 13	8×13
C6 Env (114 × 162 mm)	C6 Env (114 × 162)
8K (267 × 390 mm)	8K (267 × 390)
16K (267 × 195 mm)	16K (267 × 195)
16K (195 × 267 mm)	16K (195 × 267)
NCS	There is no tray.
**	The paper size is not selected.

❖ *3 Input Tray: Status

Status	Description
Normal	—
NoTray	There is no paper tray
PaperEnd	There is no paper in the paper tray

❖ *4 Output Tray: Name

Name	Description
Standard Tray	Output Tray
Mailbox Tray 1- 4	Mailbox output tray 1- 4

❖ *5 Output Tray: Status

Status	Description
Normal	----
PaperExist	There is paper in the output tray
OverFlow	Output tray is full of paper
Error	Other error

Understanding the Displayed Information

This section describes how to read status information returned by the Network Interface Board.

Print Job Information

The status of the print job can be viewed using the following commands.

- telnet : Use the status command. ⇒ p.130 “Commands List”

Item name	Meaning
Rank	Status of print job. • Active Printing or preparing for printing. • Waiting Waiting to be transferred to the printer.
Owner	Print request user name.
Job	Print request number.
Files	The name of the document.
Total Size	The size of the data (spooled). Always displayed "0 bytes".

Print Log Information

This is a record of the most recent ten jobs that have been printed.

This log can be displayed with the following commands.

- telnet : Use the prnlog command. ⇒ p.130 “Commands List”

Name	Meaning
ID	Print request ID.
User	Print request user name.
Page	The number of pages that is printed.
Time	The time when the print request was received
User ID	User id that is to be configured in the printer driver.
JobName	The name of the document for printing.

Configuring the Network Interface Board

The Network Interface Board settings can be displayed and confirmed using the commands below.

- telnet : Use the show command. ⇒ p.130 “Commands List”

Item name	Meaning
Common	
Mode	
Protocol Up/Down	Up means active, Down means inactive.
AppleTalk	
TCP/IP	
NetWare	
NetBEUI	
Ethernet interface	
NVRAM version	Internal version number.
Device name	
Comment	
Location	
Contact	
Soft switch	
AppleTalk	
Mode	AppleTalk protocol in selection.
Net	Network number.
Object	Macintosh printer name.
Type	The type of printer.
Zone	Name of the zone that the printer belongs to.

Item name	Meaning
TCP/IP	
Mode	Up means active, Down means inactive.
ftp	
lpr	
rsh	
diprint	
web	
telnet	
download	
snmp	
ipp	
EncapType	Frame type.
Network boot	Network boot.
Address	IP address.
Netmask	Subnet mask.
Broadcast	Broadcast address.
Gateway	Default gateway address.
AccessCtrl	Access control address.
AccessMask	Access control mask.
Time server	
Home page URL	URL of homepage.
Home page link name	URL name of homepage.
Help page URL	URL of help page.
SNMP protocol	Protocol used with SNMP.

Item name	Meaning
NetWare	
EncapType	Frame type.
RPRINTER number	Remote printer number.
Print server name	Print server name.
File server name	Name of the connect file server.
Context name	Context of print server.
Switch	
Mode	Active mode.
NDS/Bindery	(this value is fixed)
Packet negotiation	
Print job timeout	Time of the job timeout.
NetBEUI	
Switch	
Mode	(this value is fixed)
Direct print	(this value is fixed)
Notification	Notification of print job completion.
Workgroup name	Name of the workgroup.
Computer name	Name of the computer.
Comment	Comment.
Share name[1]	Share name (name of the printer type).
Shell mode	Mode of remote maintenance tool.

Message List

This is a list of messages written to the printer's system log. The system log can be viewed using the syslog command.

System Log Information

You can use the following methods to view the system log.

- telnet : Use the syslog command. ⇒ p.130 “Commands List”

Message	Description and Solutions
Access to NetWare server "file server name" denied. Either there is no account for this print server on the NetWare server or the password was incorrect.	(In print server mode) Cannot log in to the file server. Confirm that the print server is registered on the file server. If a password is specified for the print server, delete it.
add_sess: community<community name> already defined.	The same community name already exists. Use another community name.
add_sess: session<community name> not defined.	A requested community name is not defined.
add_sess: bad trap addr:<IpAddress>, community:<community name>	The IP address (0.0.0.0.) is unavailable when the community access type is TRAP. Specify the host IP address for the TRAP destination.
add_sess_ipx: bad trap addr: <IPX address>, community:<community name>	The IPX address (00:00:00:00:00:00) is unavailable when the community access type is TRAP. Specify the host IPX address for the TRAP destination.
add_sess_ipx: community <community name> already defined.	The same community name already exists. Use another community name.
add_sess_ipx: session_ipx<community name> not defined.	A requested community name is not defined.

Message	Description and Solutions
ANONYMOUS FTP LOGIN FROM <IP address>, <password>	An anonymous login has been made with a password <password> from the host <IP address>.
anpd start. (AppleTalk)	An anpd (AppleTalk Network Package Daemon) has started.
Attach FileServer="file server name"	Attached to the file server as a nearest server.
Attach to print queue "print queue name"	(In print server mode) Attached to the print queue name.
Cannot create service connection	(In remote printer mode) Cannot establish a connection with the file server. The number of file server users may exceed the maximum number that the file server can handle.
Cannot find rprinter ("print server name"/"printer number")	The printer having the number displayed on the print server does not exist. Confirm the number of the printer registered to the print server.
Change IP address from DHCP Server.	The IP address changes when DHCP LEASE is renewed. To always assign the same IP address, set a static IP address to the DHCP server.
child process exec error! (process name)	Failed to start the network service. Turn the printer off and then on. If this does not work, contact your service or sales representatives.
Connected DHCP Server(<DHCP server address>).	The IP address was successfully received from the DHCP server.
connection from <IP address>	Logged on from the host <IP address>.
Could not attach to FileServer <error number>	(In remote printer mode) Cannot attach to the file server. For some reason, the file server refuses the connection. Check the file server configuration.

Message	Description and Solutions
Could not attach to PServer <print server>	(In remote printer mode) Cannot attach to the print server. For some reason, the print server refuses the connection. Check the print server configuration.
Current Interface Speed:xxxMbps	The speed of the network (10 Mbps or 100 Mbps).
Current IP address <current IP address>	The IP address <current IP address> was received from the DHCP server.
Current IPX address	The current IPX address.
DHCP lease time expired.	DHCP lease time has expired. The printer tries to discover the DHCP server again. The IP address used up to now becomes invalid.
DHCP server not found.	The DHCP server cannot be found. Make sure the DHCP server is running on the network.
dhcpcd start.	A dhcpcd (DHCP client service) has started.
diprinted started	Direct print service has started.
Duplicate IP=(IP address>(from <MAC address>).	The same IP address is used. An IP address must be unique. Check the address of the device indicated in The same IP address is used. An IP address must be unique. Check the address of the device indicated in <MAC address>.
Established SPX Connection with PServer,(RPSocket=(socket number>), connID=<connection ID>	(In remote printer mode) A connection with the print server has been established.
Exit pserver	(In print server mode) Exits the print server because the necessary print server settings have not been made.
Frametype="frame type name"	The "frame type name" is configured to be used on NetWare.

Message	Description and Solutions
httpd start.	An httpd has started.
inetd start.	An inetd has started.
ipp disable.	Printing with ipp is disabled.
ipp enable	Printing with ipp is enabled.
LeaseTime=<lease time>(sec), RenewTime=<renew time>(sec).	The resource lease time that was received from the DHCP server is in seconds. The renewal time is also in seconds.
Login to fileserver "file server name" ("NDS|BINDERY")	(In print server mode) Logged in to the file server with NDS or BINDERY mode.
multid start.	Data transmission service for multiprotocols has started.
nbstart start. (NetBEUI)	The service for NetWare protocol stack setting has started.
NBT Registration Broadcast(<NetBIOS name>)	Use a local broadcast to map <NetBIOS name> with the IP address.
nptd start.	A nbtd (NetBIOS over TCP/IP Daemon) has started. (Available only in DHCP mode)
NetBEUI Computer Name="computer name"	The NetBEUI Computer Name is defined as "computer name".
nmsd start. (NetBEUI)	A nmsd (Name Server Daemon) has started.
npriter start. (NetWare)	(In remote printer mode) NetWare service has started in remote printer mode.
nwstart start. (NetWare)	The service for NetWare protocol stack setting has started.

Message	Description and Solutions
Open log file "file name"	(In print server mode) The specified log file has been opened.
papd start.	AppleTalk print service has started.
phy release file open failed.	Replacing the Network Interface Board is required. Contact your sales or service representatives.
Print queue "print queue name" cannot be serviced by printer 0, "print server name"	(In print server mode) The print queue name cannot be serviced. Make sure that print queue volume exists on the specified file server.
Print server <print server name> has no printer.	(In print server mode) The printer object is not assigned to the print server <print server name>. Using NWAdmin, assign the printer object, and then restart the printer device.
Print session full	Cannot accept the print session.
Printer "printer name" has no queue	(In print server mode) The print queue is not assigned to the printer. Using NWAdmin, assign the print queue to the printer, and then restart it.
pserver start. (NetWare)	(In print server mode) NetWare service has started.
Required computer name (<Computer name>) is duplicated name	The same computer name is detected on the network. The start job determines the computer name by adding the computer name to the suffix (0,1....). Configure a new computer name that is unique.
Required file server ("file server name") not found	Cannot find the required file server.
restarted.	LPD has started.

Message	Description and Solutions
sap enable, saptype=<SAP type>, sapname=<sap name>	The SAP function has started. The SAP (SAP type and SAP name) packet is issued to advertise the service on the SAP table on the NetWare server.
Set context to <NDS context name>	A <NDS context name> has been set.
shutdown signal received. network service rebooting...	Rebooting the network service.
smbd start. (NetBEUI)	An smbd (SMB (Server Message Block) service) has started.
Snmp over ip is ready.	Communication over TCP/IP with SNMP is available.
Snmp over ipx is ready.	Communication over IPX with SNMP is available.
snmpd start.	SNMP service has started.
The print server received error "error number" during attempt to log in to the network.Access to the network was denied.Verify that the print server name and password are correct.	Cannot log in to the file server. The print server is not registered or the password is specified. Register the print server without specifying a password.

Precautions

Please pay attention to the following when using the Network Interface Board. When configuration is necessary, follow the appropriate procedures below.

Connecting a Dial Up Router to a Network

When the NetWare file server and the printer are on the opposite side of a router, packets are continuously sent back and forth, possibly causing communications charges to increase. Because the packet transmission is a specification of NetWare, you need to change the configuration of the router. If the network you are using does not allow you to configure the router, configure the printer.

Configuring the router

Filter the packets so that they do not pass over the dial up router.

Note

- ❒ The MAC address of the printer doing the filtering is printed on the printer configuration page. For more information about printing a configuration page, see the Setup Guide that comes with the printer.
- ❒ For more information about configuring the printer if the router cannot be configured, see the instructions below.

Configuring the printer with NetWare

1 Following the setup method in this manual, configure the file server.

2 Set the frame type for a NetWare environment.

Reference

- For more information about selecting a frame type, see Administrator Reference 1 that comes with the printer.

Configuring the printer without NetWare

1 While not printing, the Network Interface Board sends packets on the network. Set the NetWare to inactive.

Reference

- For more information about selecting a protocol, see Administrator Reference 1 that comes with the printer.

PostScript Printing from Windows

When printing PostScript from Windows, see the PostScript 3 Operating Instruction Supplement provided as a PDF file on the CD-ROM labeled "Operating Instructions".

NetWare Printing

Form Feed

You should not configure the form feed on NetWare. The form feed is controlled by the printer driver on Windows. If the NetWare form feed is configured, the printer might not print properly. If you want to change the form feed setting, always configure it on Windows.

- With Windows 95/98/Me, clear the **[Form feed]** check box under the **[Printer Settings]** tab in the printer properties dialog box.
- With Windows 2000, clear the **[Form feed]** check box under the **[NetWare Settings]** tab in the printer properties dialog box.
- With Windows NT 4.0, clear the **[Form feed]** check box under the **[NetWare Settings]** tab in the printer properties dialog box.

Banner Page

You should not configure a banner page on NetWare. If you want to change the banner page setting, always configure it on Windows.

- With Windows 95/98/Me, clear the **[Enable banner]** check box under the **[Printer Settings]** tab in the printer properties dialog box.
- With Windows 2000, clear the **[Enable banner]** check box under the **[NetWare Settings]** tab in the printer properties dialog box.
- With Windows NT 4.0, clear the **[Enable banner]** check box under the **[NetWare Settings]** tab in the printer properties dialog box.

Printing after resetting the printer

After resetting the remote printer, it will be cut off from the print server for about 30-40 seconds before connecting again. Due to the NetWare specification, print jobs may be accepted, but they will not be printed during this interval.

When using the printer as a remote printer, wait about 2 minutes after resetting the printer before attempting to print.

When Using DHCP

Note the following points when using DHCP (Dynamic Host Configuration Protocol).

Select "DHCP" for "Network Boot" on the panel display, If you use DHCP. See Administrator Reference 1 for more information.

Configure the printer with a reserved IP address

To always assign the same IP address, configure a reserved IP address using the DHCP server.

Note

- ❒ When multiple DHCP servers are used, reserve the same address with each DHCP server. The Network Interface Board needs to receive information from the DHCP server that it contacts.
- ❒ If you do not know the MAC address, it can be found on the configuration page printed by the printer.
- ❒ For details about the settings for IP address, see the Help files for the operating system you use.
- ❒ When you select the printer in the DHCP environment using SmartNetMonitor for Client, use the printer name that is displayed with SmartNetMonitor for Admin or shown on the configuration page.

Additional information

- When the DHCP server does not assign an IP address, the Network Interface Board uses 11.22.33.44 as a temporary IP address. You can confirm the printer's IP address on the network configuration page.
- Because 11.22.33.44 is a special IP address, you cannot print using this address.
- When using the DHCP relay agent in a network environment that uses a dial up router to connect to the Network Interface Board, an increase in communication fees can occur.

Memory Capacity and Paper Size

<table>
<tr><th rowspan="2">Resolution</th><th rowspan="2">Paper Size</th><th colspan="2">Non-Duplex Printing</th><th colspan="2">Duplex Printing</th></tr>
<tr><th>Can be printed</th><th>Guarantee</th><th>Can be printed</th><th>Guarantee</th></tr>
<tr><td rowspan="6">600 × 600 dpi</td><td>A3/11×17</td><td rowspan="6">Guarantee
64 MB
(Standard)</td><td rowspan="6">64 MB
(Standard)</td><td rowspan="5">64 MB
(Standard)</td><td rowspan="6">128 MB
(Standard + 64 MB)</td></tr>
<tr><td>B4/8$^{1}/_{2}$×11</td></tr>
<tr><td>8$^{1}/_{2}$×14</td><td rowspan="4">Guarantee
64 MB
(Standard)</td></tr>
<tr><td>A4/8$^{1}/_{2}$×11</td></tr>
<tr><td>B5</td></tr>
<tr><td>A5</td></tr>
<tr><td rowspan="6">1200 ×600 dpi</td><td>A3/11×17</td><td rowspan="2">64 MB
(Standard)</td><td rowspan="6">128 MB
(Standard + 64 MB)</td><td rowspan="5">64 MB
(Standard)</td><td>192 MB
(Standard + 128 MB)</td></tr>
<tr><td>B4/8$^{1}/_{2}$×11</td><td rowspan="5">128 MB
(Standard + 64 MB)</td></tr>
<tr><td>8$^{1}/_{2}$×14</td><td rowspan="4">Guarantee
64 MB
(Standard)</td></tr>
<tr><td>A4/8$^{1}/_{2}$×11</td></tr>
<tr><td>B5</td></tr>
<tr><td>A5</td><td>Guarantee
64 MB
(Standard)</td></tr>
</table>

<table>
<tr><th rowspan="2">Resolution</th><th rowspan="2">Paper Size</th><th colspan="2">Non-Duplex Printing</th><th colspan="2">Duplex Printing</th></tr>
<tr><th>Can be printed</th><th>Guarantee</th><th>Can be printed</th><th>Guarantee</th></tr>
<tr><td rowspan="7">1200 × 1200 dpi</td><td>A3/11×17</td><td rowspan="5">64 MB
(Standard)</td><td>192 MB
(Standard + 128 MB)</td><td rowspan="2">128 MB
(Standard + 64 MB)</td><td>320 MB
(Standard +256 MB)</td></tr>
<tr><td>B4/8$^{1}/_{2}$×11</td><td rowspan="6">128 MB
(Standard + 64 MB)</td><td rowspan="3">64 MB
(Standard)</td><td rowspan="2">192 MB
(Standard + 128 MB)</td></tr>
<tr><td>8$^{1}/_{2}$×14</td></tr>
<tr><td>A4/8$^{1}/_{2}$×11</td><td></td></tr>
<tr><td>B5</td><td></td><td rowspan="3">128 MB
(Standard + 64 MB)</td></tr>
<tr><td>A5</td><td>Guarantee
64 MB
(Standard)</td><td></td></tr>
</table>

Moving and Transporting the Printer

⚠ ***CAUTION:***

- *When moving the machine, each person should hold the handle, where two are located on opposite sides, and lift slowly and slowly. Lifting it carelessly or dropping it may cause an injury.*
- *When you move the printer, remember to unplug the power cord from the wall outlet to avoid a fire or an electric shock.*
- *When you pull out the plug from the socket, grip the plug to avoid damaging the cord and causing a fire or an electric shock.*

Note

❒ The printer weights approximately 82 kg (181 lbs).

Repack the printer in its original packing materials for transporting.

Important

❒ Be sure to disconnect all cables from the printer before transporting it.

❒ The printer is a precision piece of machinery. Take care to avoid damage during shipment.

Moving the Printer

⚠ ***CAUTION:***

- *When lifting the machine, use the inset grips on both sides. Otherwise the printer could break or cause injury if dropped.*
- *Before moving the machine, unplug the power cord from the outlet. If the cord is unplugged abruptly, it could become damaged. Damaged plugs or cords can cause an electrical or fire hazard.*

Note

❒ The machine weight is about 82 kg (181 lbs).

Moving the printer in the short distance

1 Be sure to check the following points:

- The power switch is turned off.
- The power cable is unplugged from the wall outlet.
- The interface cable is unplugged from the printer.

2 If you installed external options, remove them.

3 Be sure to close the bypass tray and the front cover.

4 Lift the printer and move it horizontally to the place where you want to install it.

Important

❒ Be sure to move the printer horizontally. Moving the printer slowly avoiding the toner to scatter.

❒ If the Paper Feed Unit(s) is installed, detach and move the printer separately.

Specifications

Mainframe

❖ Configuration:

Desktop

❖ Print Process:

Laser beam scanning & Electrophotographic printing
Dual component toner development

❖ Printing Speed:

Monochrome: Maximum 38 pages per minute (A4, 11× $8^1/_2$)
Color: Maximum 28 pages per minute (A4, 11× $8^1/_2$)

❖ Parallel Interface:

Interface

Standard 36-pin printer cable and a parallel port on the host computer
IEEE 1284 I/F (Compatible, ECP, Nibble)

- Do not use a cable more than 2.5 meters (8.2 feet) long.

❖ Resolution:

1,200 × 1,200 dpi (RPCS, PostScript 3)
1,200 × 600 dpi (RPCS, PostScript 3)
600 × 600 dpi (PCL 5c, RPCS, PostScript 3)
300 × 300 dpi (PCL 5c) *monochrome only

❖ Printer Language:
PCL 5c, RPCS, Adobe PostScript Level 3

❖ Fonts:
PCL 5c
Agfa Font 35 Manager Intellifonts, 10 TrueType fonts, and 1 Bitmap font Agfa Font Manager available, 31 fonts.
PostScript 3
136 fonts (Type 2:24, Type 14:112)

❖ Paper size:
See "*Paper and Other Media*" in Maintenance Guide 2.

❖ Paper Weight:
See "*Paper and Other Media*" in Maintenance Guide 2.

❖ Power Source:
120 V, 60 Hz, 10 A

❖ Power Consumption:

Printing	1200 W or less
Energy Saver	45 W or less

❖ Noise Emission *1 :
Sound Power Level

	Mainframe only
During Printing	68 dB (A)
Stand-by	42 dB (A)

Sound Pressure level [*2]

	Mainframe only
During Printing	55 dB (A)

[*1] The preceding measurements made in accordance with ISO7779 are actual values.
[*2] Measured at the position of a bystander.

❖ Dimensions:

	Width	Depth	Height
Printer only (tray not extended)	575 mm (22.7")	648 mm (25.6")	715 mm (28.2")
With full options	1,110 mm (44")	648 mm (25.6")	985 mm (38.9")

❖ Weight:

Approximately 82 kg (181 lbs) (toner cartridge and power cord included)

❖ Warm-up Time:

Less than 120 seconds (23°C, 73F)

❖ Paper Input Capacity:

Standard paper tray	500 sheets × 2 [*1]
Bypass tray [*2]	100 sheets [*1]
Optional Paper Feed Units	500 sheets × 1,500 sheets ×2 [*1]
Paper Bank PS470	2,000 sheets [*1]

[*1] Paper weight: 60 - 105 g/m^2 (16 - 28 lb)
[*2] You can load up to 10 envelopes at the same time.

❖ Paper Output Capacity:

Face down: 500 sheets (80 g/m^2, 20 lb)
Face up: 100 sheets (80 g/m^2, 20 lb)

❖ Paper weight and number of sheets to be set:

	Supported paper weight	**Maximum number of sheets (plain paper)**
Tray 1	60 - 105 g/m^2 (16 - 28 lb)	550 (80 g/m^2, 20 lb)
Tray 2	60 - 105 g/m^2 (16 - 28 lb)	550 (80 g/m^2, 20 lb)
Bypass Tray	52 - 162 g/m^2 (14 - 42 lb)	100 (80 g/m^2, 20 lb)
PAPER FEED UNIT Type 3800C (500 × 1)	60 - 105 g/m^2 (16 - 28 lb)	500 (80 g/m^2, 20 lb)
PAPER FEED UNIT Type 3800C (500 × 2)	60 - 105 g/m^2 (16 - 28 lb)	500 (80 g/m^2, 20 lb)
Paper Bank PS470	60 - 105 g/m^2 (16 - 28 lb)	2000 (80 g/m^2, 20 lb)

❖ Memory:

Standard 64 MB, up to 384 MB (with the optional Memory Unit)

❖ Network:

Topology: Ethernet (10BaseT/100BaseTX)
Protocol: TCP/IP, NetBEUI, IPX/SPX, AppleTalk

Options

PAPER FEED UNIT Type 3800C (500 × 1)

❖ **Dimensions (W×D×H):**
540 × 600 × 172 mm (21.3" × 23.7" × 6.8")

❖ **Paper Weight:**
60 - 105 g/m^2 (16 - 28 lb)

❖ **Paper Size:**
A5 (Long edge feed) - A3, 8$^1/_2$×11 - 11×17 (Short edge feed)

PAPER FEED UNIT Type 3800C (500 × 2)

❖ **Dimensions (W×D×H):**
540 × 600 × 270 mm (21.3" × 23.7" × 10.7")

❖ **Paper Weight:**
60 - 105 g/m^2 (16 - 28 lb)

❖ **Paper Size:**
A5 (Long edge feed) - A3, 8$^1/_2$×11 - 11×17 (Short edge feed)

Paper Bank PS470 (Large capacity tray)

❖ **Dimensions (W×D×H):**
540 × 600 × 270 mm (21.3" × 23.7" × 10.7")

❖ **Paper Weight:**
60 - 105 g/m^2 (16 - 28 lb)

❖ **Paper Size:**
A4 (Long edge feed) or 8$^1/_2$×11 (Short edge feed)

SR770 (2 Tray Finisher)

❖ **Dimensions (W×D×H):**
680 × 620 × 1,030 mm (26.8" × 24.4" × 40.6")

❖ **Paper Size:**
A5 (Long edge feed) - A3, 8$^1/_2$×11 - 11×17 (Short edge feed)

❖ **Paper Weight:**
60 - 105 g/m^2 (16 - 28 lb)

❖ **Stack Capacity:**

- Upper Tray:
  500 sheets (A4/11×8$^1/_2$/B5/A5 (Long edge feed) - 80 g/m^2, 20 lbs.)
- Lower Tray
  2,000 sheets (A4/11×8$^1/_2$ (Long edge feed) - 80 g/m^2, 20 lbs.)
  750 sheets (A3, B4, A4 (Short edge feed), B5, 8$^1/_2$×14, 11×17, 8$^1/_2$×11 (Short edge feed))
  500 sheets (A5 (Long edge feed))

❖ **Weight:**
53 kg (116.9 lb)

Mail Bin Type 3800C (4bin Mail Box)

❖ **Dimensions (W×D×H):**
540 × 600 × 400 mm (21.3" × 23.6" × 15.8")

❖ **Paper Size:**
A5 (Long edge feed) - A3, 8$^1/_2$×11 - 11×17 (Short edge feed)

❖ **Paper Weight:**
60 - 105 g/m^2 (16 - 28 lb)

❖ **Stack Capacity:**
125 sheets / bin (A4 (Long edge feed) 80 g/m^2)

❖ **Weight:**
7 kg (15.5 lb)

Duplex Unit Type 3800C

❖ Dimensions (W×D×H):

90 × 524 × 430 mm (3.6" × 20.7" × 17.0")

❖ Paper Size:

A5 (Long edge feed) - A3, 17×11 - $10^1/_2 \times 7^1/_4$ (Long edge feed)

❖ Weight:

8 kg (3.6 lb)

Printer Hard Disk Type 3800C

❖ Storage Capacity (Formatted):

20 GB, 40 GB

- Spool print data to collate
- Spool Sample/Locked Print data
- Store PostScript fonts
- Store log data

Note

❒ You can install PostScript fonts with this optional Hard Disk Drive. With Macintosh, types of fonts supported are PostScript Type 1 and PostScript Type 2. To download them, use Printer Utility for Mac.

❒ When you install optional scanner unit, 40 GB printer hard disk must be required to use document server function.

Memory Unit TypeB 64/128/256MB

❖ **Module Type:**
SO-DIMM (Small Outline Dual-in-line Memory Module)

❖ **Memory Type:**
SDRAM (Synchronous Dynamic RAM)

❖ **Number of Pins:**
144 pins

User Account Enhance Unit TypeB

❖ **Capacity:**
64 KB

- Store User Code (Up to 400 users)

1394 Interface Unit Type 1045

❖ **Interface:**
IEEE Std 1394-1955 compliant, IEEE Std 1394-2000 compliant.

❖ **Interface Connector:**
IEEE 1394 (6 pin × 2)

❖ Required cable:

1394 interafce cable (6 pin x 4 pin, 6 pin x 6 pin)

Important

- ❒ You cannot plug devices together so as to create loops.
- ❒ Do not use a cable more than 4.5 meters long.

❖ Connectable number of device in a bus:

Maximum 63

❖ Allowed cable hops in a bus:

Maximum 16

❖ Data Transmission:

400 Mbps (Maximum)

❖ Power supply:

Non power supply
Cable Power repeated (IEEE 1394a-2000 compliant)

Important

- ❒ In Windows 2000, the 1394 Interface Unit can only be used with Service Pack 1 or later. If the Service Pack is not installed, the connectable number of device in a 1394 bus is only one, and the client cannot access the 1394 Interface Unit without using an account has the Administrators permission.
- ❒ The optional 1394 Interface Unit is not supported by Windows 95/98/Me. If the "plug and play" function starts, click **[Cancel]** in the **[New Hardware Found]** or **[Device Driver Wizard]** dialog box.
- ❒ Do not plug or unplug the 1394 interface cable while installing the printer driver.
- ❒ Do not turn off or on the device while installing the printer driver.
- ❒ Do not uninstall the printer driver, when the 1394 Interface Unit is installed. Unplug the 1394 interface cable to uninstall the printer driver.

Note

- The 1394 Interface Unit could not receive data from more than one PC at the same time. In this case, an error message appears. The printer can accept data sent from other PCs, after the first print job has finished.
- The bidirectional transmissions are not supported by the 1394 Interface Unit.
- When the 1394 Interface Unit is installed successfully, the printer icon automatically changes from "Use Printer Offline" to "Ready ", according to the 1394 interface cable plug.

1394 Interface Unit Type 1045, 187

A

access control address, 132
access control mask, 132
ARP+PING, 134
Auto Continue, 93

B

BOOTP, 134
Bypass size, 73

C

cable, 179, 188
Changing Names and Comments, 59
    SmartNetMonitor for Admin, 60
    Web Browser, 62
Changing Port Settings
    Windows 2000, 17
    Windows NT 4.0, 33
Color Demo Page, 80
community name, 138
Config. Page, 80, 81
Configuration
    Windows 2000, 10
configuration
    NetWare, 40
    NetWare 3.x, 41
    NetWare 4.x, 5, 49
    Web Browser, 124
    Windows NT 4.0, 26
Configuring, 59
Configuring NetBEUI for Printing
    Windows 2000, 12
    Windows NT 4.0, 28
Configuring the Printer using SmartNetMonitor for Admin, 118
Configuring the Protocols
    Windows 2000, 10
    Windows NT 4.0, 26

D

default gateway address, 132
DHCP, 134, 173
dial up router, 170
Displaying the Status of Printer, 64
    SmartNetMonitor for Admin, 64
    SmartNetMonitor for Client, 65
    Web Browser, 66
Duplex, 93
Duplex Unit Type 3800C, 186

E

Energy Saver 1, 93
Escape key, 71

F

Font Number, 109
Font Pitch, 109
fonts, 180
Font Source, 109
Form Lines, 109

G

Getting Printer Information over the Network, 146

H

HDD Format, 87
Hex Dump, 80
Host Interface, 70, 102

I

Image Density, 87
information
    Network Interface Board configuration, 137, 161
    print job, 159
    print log, 160
    system log, 137, 164
install
    SmartNetMonitor for Admin, 42, 50
Installing by "Network" installation
    Windows 2000, 14
Installing Software
    Windows 2000, 14
    Windows NT 4.0, 30
I/O Buffer, 102
I/O Timeout, 102
IP address, 131
IPP, 141
IPP for Printing
    Windows 2000, 10
    Windows NT 4.0, 26

J

Job Separation, 93

L

LAN adapter number (Lana Number), 28
Language, 70, 115
List/Test Print, 70, 80
List/Test Print Parameters, 80
Locked Print, 70

M

Mail Bin Type 3800C, 185
Maintenance, 70, 87, 88
Making Printer Settings with the Operation Panel, 67
memory, 182
Memory Capacity and Paper Size, 175
Memory Overflow, 93
Memory Unit TypeB, 187
menu, accessing, 70
menu, changing, 115
Menu Chart, 67
Menu key, 70
Menu List, 80
Menu Protect, 87
message, 164
MIB, 128
MisfeedRecovery, 93
Monitoring, 59
Moving the Printer, 178

N

NetWare, 40
NetWare 3.x, 41
NetWare 4.x, 5, 49
NetWare Printing, 172
Network Boot, 134
"Network Install"
Windows NT 4.0, 30
Network Interface Board, 182
Network Setup, 102
NIB, 182

O

On Line key, 72
options, 183
Orientation, 109
Output Tray, 93

P

Page Size, 93
Paper Bank PS470, 184
PAPER FEED UNIT Type 3800C, 183
Paper Input, 70, 73
Paper type, 73
password, 126, 144
PCL, 109
PCL Config.Page, 80
PCL Menu, 70
Point Size, 109
PostScript Printing from Windows, 171
precautions, 170
Printer Hard Disk Type 3800C, 186
Printer Shared
Windows 2000, 25
Windows NT 4.0, 39
printer status, 136
Prt. Err Report, 93
PS Config. Page, 80
Pure IP, 53

R

RARP+TFTP, 134
Registration, 87
remote printer, setup
NetWare 4.x, *5*, 55
Resolution, 93

S

Sample Print, 70
SDRAM, 182, 187
Setting
client computer, *Windows 2000*, 25
Setting Up as a Print Server
NetWare3.x, 43
NetWare4.x/NetWare5.1, 51
Setting Up as a Remote Printer
NetWare3.x, 45
NetWare4.x/NetWare5.1, 55
Setting Up Options
Windows 2000, 22
Windows NT 4.0, 36
setup
client computer, *Windows NT 4.0*, 39
SmartNetMonitor for Admin
install, 42, 50
SMB, 142
SNMP, 128, 138
specifications, 179
SR770 (2 Tray Finisher), 184
subnet mask, 132
Sub Paper Size, 93
Symbol Set, 109
System, 70, 93

T

TCP/IP for Printing
Windows 2000, 10
Windows NT 4.0, 26
telnet, 129
The conditions of the bidirectional transmissions, 23, 37
Tray Locking, 73
Tray Paper Size, 73
Tray Priority, 73

U

Understanding the Displayed Information, 159
Unit of Measure, 93

W

Web Browser, 124
Windows 2000, 10
Windows NT 4.0, 26

Copyright © 2001

Operating Instructions

Printer Client Reference 1

Read this manual carefully before you use this product and keep it handy for future reference.
For safety, please follow the instructions in this manual.

Introduction

To get maximum versatility from this machine all operators should carefully read and follow the instructions in this manual. Please keep this manual in a handy place near the machine.

Please read the Safety Information in the “Printer Reference” before using this machine. It contains important information related.

Important

Parts of this manual are subject to change without prior notice. In no event will the company be liable for direct, indirect, special, incidental, or consequential damages as a result of handling or operating the machine.

Software Version Conventions Used in This Manual

- NetWare 3.x means NetWare 3.12 and 3.2.
- NetWare 4.x means NetWare 4.1, 4.11, 4.12 and IntranetWare.

Trademarks

Macintosh is a registered trademark of Apple Computer, Inc.

Microsoft, Windows, Windows NT are registered trademarks of Microsoft Corporation in the United States and/or other countries.

NetWare is a registered trademark of Novell, Inc.

PostScript is a registered trademark of Adobe Systems, Incorporated.

PCL is a registered trademark of Hewlett-Packard Company.

Other product names used herein are for identification purposes only and might be trademarks of their respective companies. We disclaim any and all rights in those marks.

Note

The proper names of the Windows operating systems are as follows:

- Microsoft® Windows® 95 operating system
- Microsoft® Windows® 98 operating system
- Microsoft® Windows® Millennium Edition (Windows Me)
- Microsoft® Windows® 2000 Professional
- Microsoft® Windows® 2000 Server
- Microsoft® Windows NT® Server operating system Version 4.0
- Microsoft® Windows NT® Workstation operating system Version 4.0

How to Read This Manual

Symbols

In this manual, the following symbols are used:

⚠ ***WARNING:***
This symbol indicates a potentially hazardous situation which, if instructions are not followed, could result in death or serious injury.

⚠ ***CAUTION:***
This symbol indicates a potentially hazardous situation which, if instructions are not followed, may result in minor or moderate injury or damage to property.

* The statements above are notes for your safety.

Important
If this instruction is not followed, paper might be misfed, originals might be damaged, or data might be lost. Be sure to read this.

Preparation
This symbol indicates the prior knowledge or preparations required before operating.

Note
This symbol indicates precautions for operation, or actions to take after misoperation.

Limitation
This symbol indicates numerical limits, functions that cannot be used together, or conditions in which a particular function cannot be used.

Reference
This symbol indicates a reference.

[ ]
Keys that appear on the machine's panel display.

Keys and buttons that appear on the computer's display.

【 】
Keys built into the machine's operation panel.

Keys on the computer's keyboard.

TABLE OF CONTENTS

1. Confirming a Network Environment

Windows 95/98/Me Client **1**
Windows 2000 Client **2**
Windows NT 4.0 Client **3**
NetWare Client **4**
Macintosh Client **5**
UNIX Client **6**

2. Windows 95/98/Me Configuration

Printing with a Print Server **7**
Printing with a Windows 2000 or Windows NT 4.0 Print Server 7
Printing without Using a Print Server **9**
Configuring Protocols 9
Installing Software 11
Printing with Parallel Connection **15**
Installing the Printer Driver 15
Setting up Options **17**

3. Windows 2000 Configuration

Printing with a Print Server **19**
Printing with a Windows 2000 or Windows NT 4.0 Print Server 19
Printing without Using a Print Server **21**
Configuring the Protocols 21
Installing Software 23
Printing with a Standard TCP/IP Port 27
Configuring LPR Port Printing 28
Printing with Parallel Connection **30**
Installing a Printer Driver 30
Setting up Options **31**

4. Windows NT 4.0 Configuration

Printing with a Print Server 33
Printing with a Windows 2000 or Windows NT 4.0 Print Server 33
Printing without Using a Print Server 35
Configuring the Protocols 35
Installing Software 37
Configuring LPR Port Printing 41
Printing with a Parallel Connection 43
Installing a Printer Driver 43
Setting up Options 44
INDEX 46

1. Confirming a Network Environment

Windows 95/98/Me Client

For details about how to set up the printer as a network printer in a Windows 95/98/Me environment, see P.7 *"Windows 95/98/Me Configuration"*. There are three methods for using the printer as a network printer.

❖ Printing with a Print Server

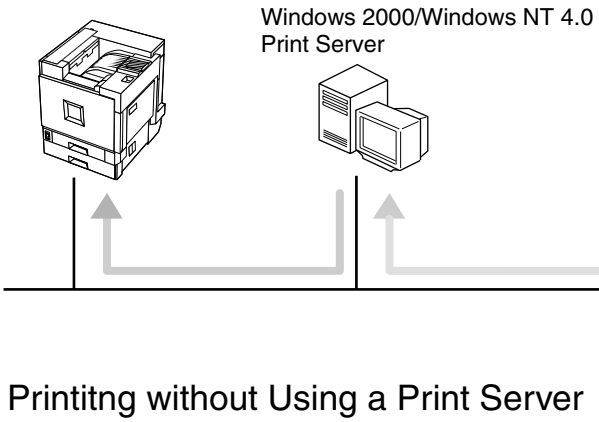

❖ Printitng without Using a Print Server

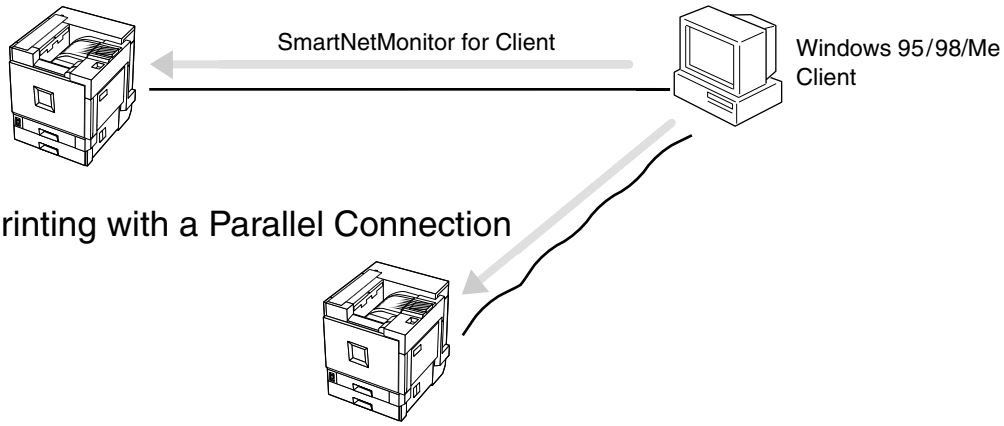

❖ Printing with a Parallel Connection

Windows 2000 Client

For details about how to set up the printer as a network printer in a Windows 2000 environment, see P.19 *"Windows 2000 Configuration"*. There are three methods for using the printer as a network printer.

❖ Printing with a Print Server

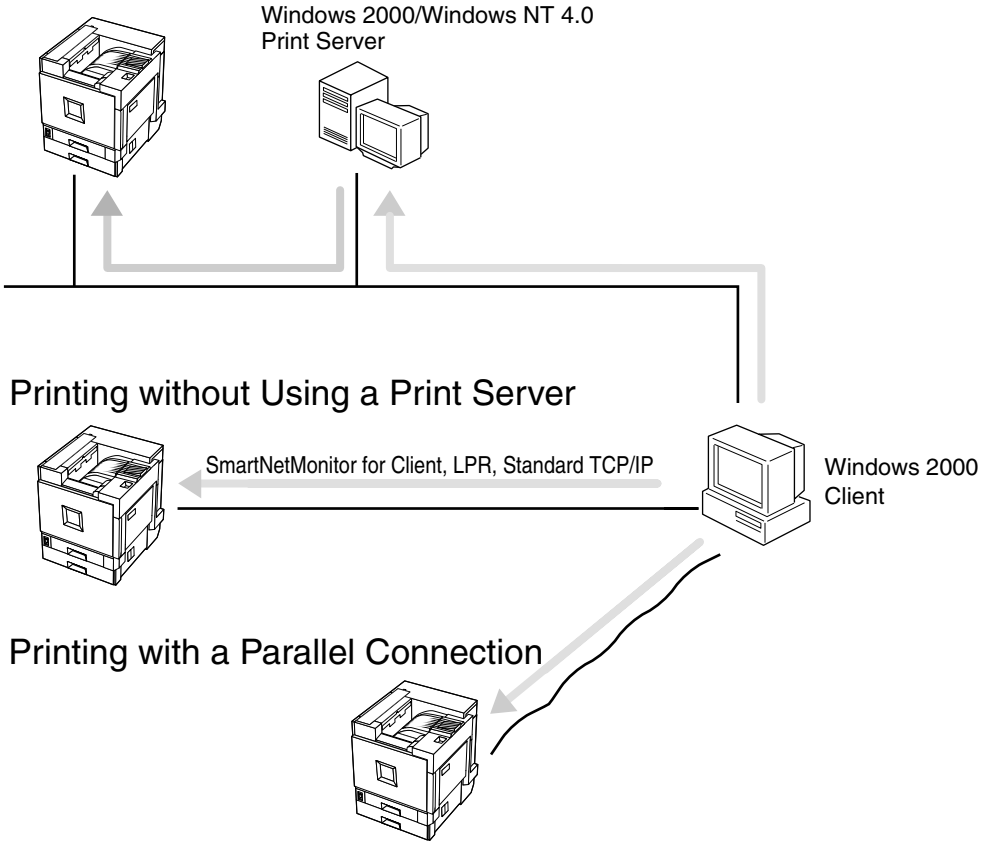

❖ Printing without Using a Print Server

❖ Printing with a Parallel Connection

Windows NT 4.0 Client

For details about how to set up the printer as a network printer in a Windows NT 4.0 environment, see P.33 *"Windows NT 4.0 Configuration"*. There are three methods for using the printer as a network printer.

❖ Printing with a Print Server

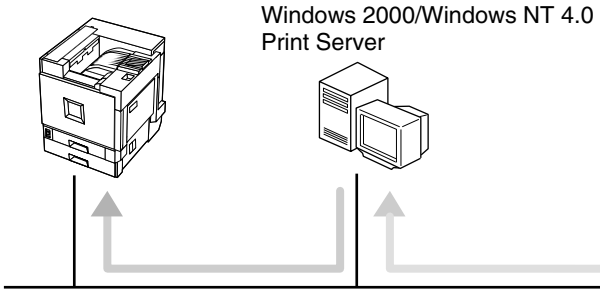

❖ Printing without Using a Print Server

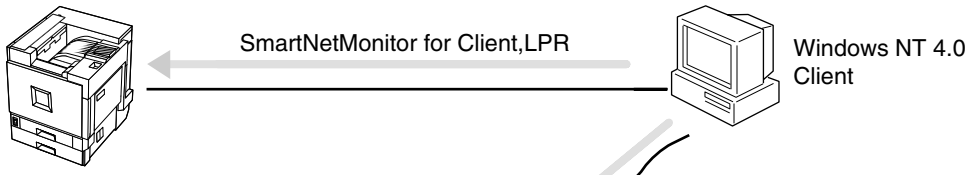

❖ Printing with a Parallel Connection

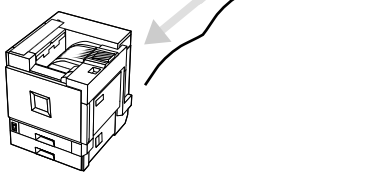

NetWare Client

For details about how to set up the printer as a network printer in a NetWare environment, and how to use the printer as either a print server or a remote printer, see "*NetWare Configuration*" in Printer Client Reference 2 included as a PDF file on the CD-ROM.

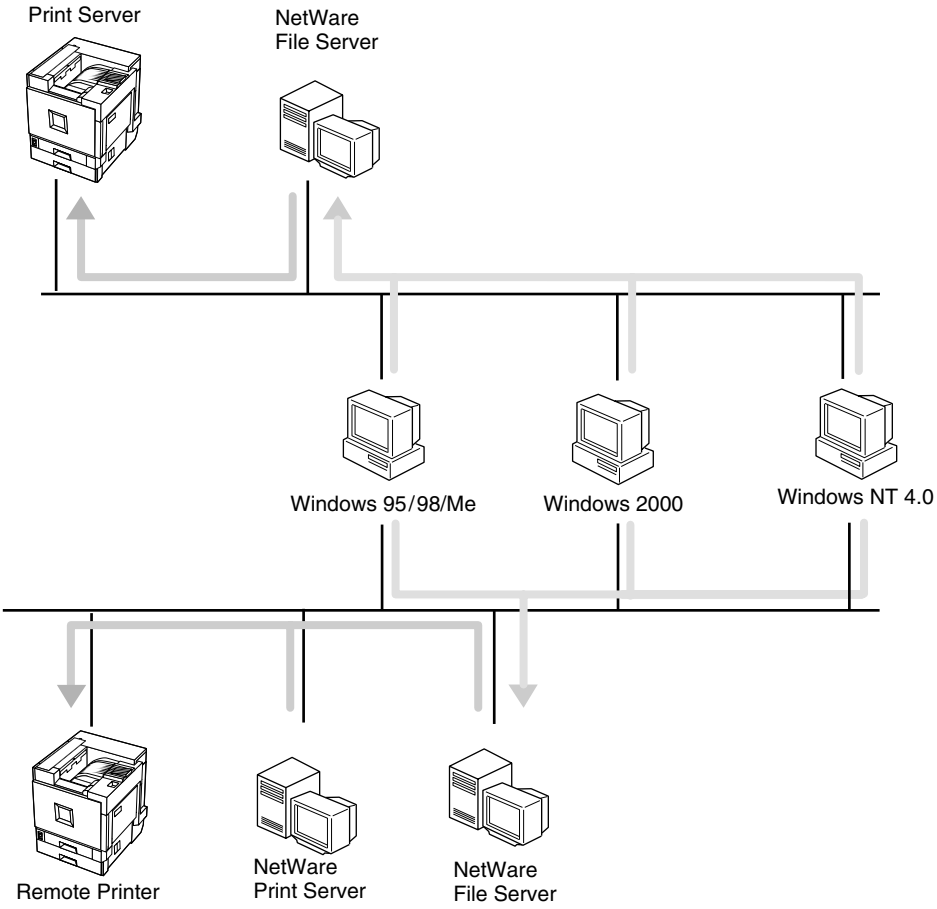

Macintosh Client

For details about how to set up the printer as a network printer in a Macintosh environment, see "*Macintosh Configuration*" in Printer Client Reference 2 included as a PDF file on the CD-ROM.

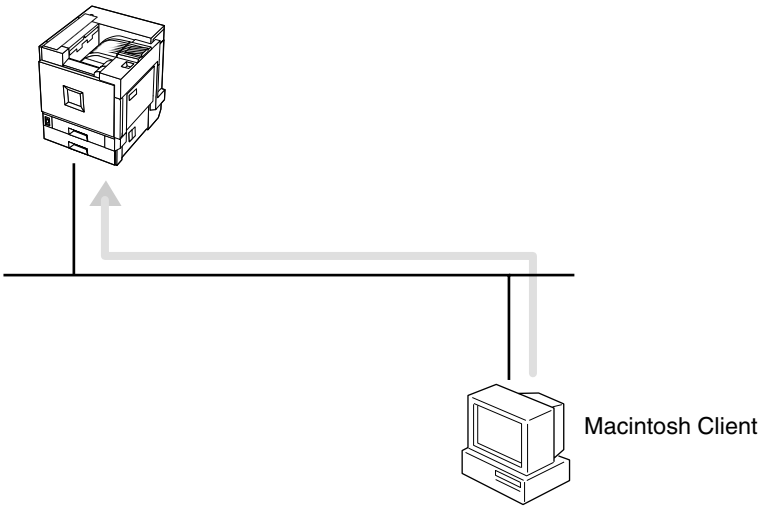

UNIX Client

For details about how to setup the printer as a network printer in a UNIX environment, see the UNIX Supplement included as a PDF file on the CD-ROM.

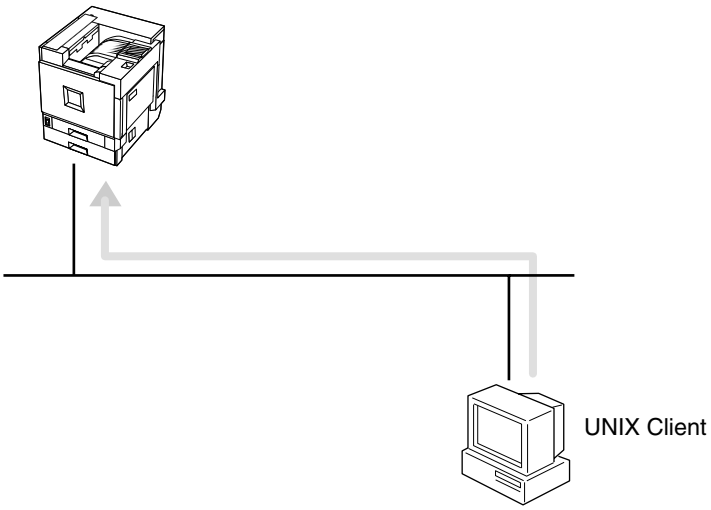

2. Windows 95/98/Me Configuration

Printing with a Print Server

Printing with a Windows 2000 or Windows NT 4.0 Print Server

This section describes the procedures for setting up a client on a network that uses Windows 2000 Server, Windows 2000 Professional, Windows NT 4.0 Server or Windows NT 4.0 Workstation as a print server.

To print from Windows 95/98/Me, you must install the printer driver and change the printer port to the print server.

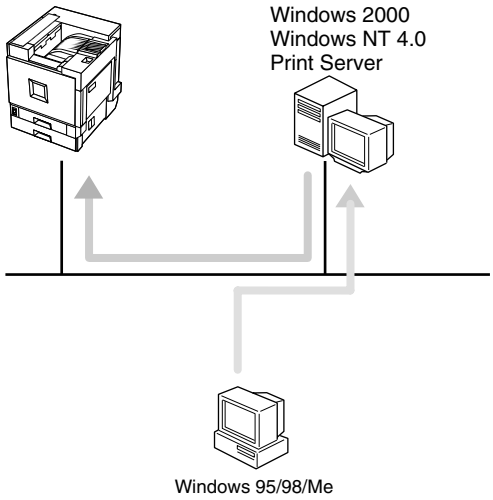

Preparation

If you print with a print server, select **[Typical]** installation.

The PCL 5c and RPCS printer driver can be installed by **[Typical]** installation.

This section assumes that the client has already been configured to communicate with a Windows 2000 or Windows NT 4.0 print server. Do not begin the following procedure until the client has been set up and configured correctly.

1 Close all applications that are running.

2 Insert the CD-ROM into the CD-ROM drive.

The installer will start by Auto Run.

Important

❒ Never have two versions of the same printer driver installed on your system at the same time. When upgrading to a new version of the printer driver, delete the old version, and then install the new one.

Note

❒ Auto Run might not automatically work with certain OS settings. In this case, launch "INSTTOOL.EXE" located on the CD-ROM root directory.

3 **Follow the instructions on the screen.**

4 **Select [Typical] installation, and then click [Next].**

5 **Follow the instructions on the screen.**

6 **Click [Add] when the "Select Port" dialog box appears.**

7 **Select [network printer], and then click [OK].**

8 **Double-click the computer name you want to use as a print server in the "Browse for Printer" window.**

9 **Select the printer you want to use, and then click [OK].**

10 **After confirming that the location for the selected printer shown, click [Next].**

11 **Follow the instructions on the screen.**

12 **If you use a User Code, configure it.**

13 **Restart the computer after the installation is complete.**

14 **Set up the options with the printer driver.**

Note

❒ The procedure to specify the "User Code" may differ depending on the printer language.

- RPCS
  You can specify the "User Code" when installing the printer driver. You cannot register or edit the "User Code" from the printer driver dialog box. To change the "User Code", you must uninstall the printer driver then register the new "User Code" during the re-install process.
- PCL 5c/PostScript3
  You can specify the "User Code" with the printer driver properties after installing the printer driver. See the Help file for the printer driver.

❒ You must set up the options when the bidirectional transmission is disabled. For more information about the status of the bidirectional transmission, see P.17 *"The conditions of the bidirectional transmissions"*

Reference

For more information about settings for options, see P.17 *"Setting up Options"*.

Printing without Using a Print Server

Configuring Protocols

Configuring TCP/IP and IPP for Printing

Follow these instructions to configure the printer and Windows 95/98/Me to use the TCP/IP protocol and IPP.

❖ **Configuring the printer**

Configure the printer to use the TCP/IP protocol.

- Confirm that the TCP/IP protocol is set to be active. (The factory default is active.)
- Assign an IP address and make other settings required for using the TCP/IP protocol.

Reference

For more information about how to make the above settings, see "*Configuring the printer for the Network*" in Administrator Reference 1.

If DHCP is used to assign IP addresses, see Appendix, "*When Using DHCP*" in Administrator Reference 2 included as a PDF file on the CD-ROM.

Note

❒ After setting the IP address, use the ping command to confirm that it has been set correctly.

① Click **[Start]**, point to **[Programs]**, and then click **[MS-DOS Prompt]**.

② Type the following. (Example IP address is 192.168.15.16)

```
C:> ping 192.168.15.16
```

If the address has been configured correctly, the following message appears.

```
Reply from 192.168.15.16 : bytes=32 time<10ms TTL=32
```

If the address has been configured incorrectly, the following message appears.

```
Request timed out.
```

❖ **Configuring a Windows 95/98/Me computer**

Follow these steps to configure a Windows 95/98/Me computer to use the TCP/IP protocol.

① Open **[Control Panel]** and double-click the **[Network]** icon. Confirm that "TCP/IP" is listed in the **[The following network components are installed:]** box under the **[Configuration]** tab.

Note

❒ If the TCP/IP protocol is not installed, click **[Add]** under the **[Configuration]** tab and install it. For more information about installing the TCP/IP protocol, see Windows 95/98/Me Help.

② Configure the TCP/IP protocol with the appropriate IP address, subnet mask and other settings.
Confirm with the network administrator that the settings are correct.

Configuring NetBEUI for Printing

Follow these instructions to configure the printer and Windows 95/98/Me to use the NetBEUI protocol.

❖ Configuring the printer

Configure the printer to use the NetBEUI protocol.

- Confirm that the NetBEUI protocol is set to be active. (The factory default is active.)

Reference

For more information about how to make the above settings, see "*Configuring the printer for the Network*" in Administrator Reference 1.

❖ Configuring a Windows 95/98/Me computer

Install the NetBEUI protocol on the Windows 95/98/Me computer and set it as the default protocol.

① Open **[Control Panel]** and double-click the **[Network]** icon. Confirm that "NetBEUI" is listed in the **[The following network components are installed:]** box under the **[Configuration]** tab.

Note

❒ If the NetBEUI protocol is not installed, click **[Add]** under the **[Configuration]** tab and install it. For more information about installing the NetBEUI protocol, see Windows 95/98/Me Help.

❒ If "NetBEUI ->Dial-Up Adaptor" is listed in the **[The following network components are installed:]** box, select it, and then click **[Remove]** to remove the binding.

② Set the NetBEUI protocol as the default protocol. Click the **[Configuration]** tab, select "NetBEUI" in the **[The following network components are installed:]** box, and then click **[Properties]**.

③ Click the **[Advanced]** tab, select **[Set this protocol to be the default protocol]**, and then click **[OK]**.

④ Click **[OK]** to close the **[Network]** dialog box.

⑤ When the message to restart appears, click **[Yes]**.

Installing Software

Preparation

Select **[Network]** installation when you print without using a print server.

[Network] installation installs the PCL 5c and RPCS printer driver and SmartNetMonitor for Client. When you print using TCP/IP, NetBEUI or IPP protocol in a Peer-to-Peer Network, you must select this installation.

[Custom] installation allows you to install SmartNetMonitor for Client separately.

Installing by "Network" installation

1. **Close all applications that are running.**
2. **Insert the CD-ROM into the CD-ROM drive.**

   The installer will start by Auto Run.

   Important

   - ❒ Never have two versions of the same printer driver installed on your system at the same time. When upgrading to a new version of the printer driver, delete the old version, and then install the new one.

   Note

   - ❒ Auto Run might not automatically work with certain OS settings. In this case, launch "INSTTOOL.EXE" located on the CD-ROM root directory.
3. **Follow the instructions on the screen.**
4. **Select [Network] installation when the selection screen appears.**
5. **Follow the instructions on the screen.**
6. **Select a printer you want to use when the [Select Printer] dialog box appears.**
7. **Click [Add..] when the [Select Port] dialog box appears.**
8. **Select [SmartNetMonitor for Client], and then click [OK].**

   Available printers will be listed.

9 Select a printer you want to use.

TCP/IP

❶ **Click the printer you want to use, and then click [OK].**

Note

❒ Printers that respond to an IP broadcast from the computer will be displayed. To print to a printer not listed here, click **[Specify Address]**, and then type the IP address or host name.

❒ You cannot add an address partially similar to that already used. For example, when "192.168.0.2" is already used, "192.168.0.2xx" cannot be used. Similarly, when "192.168.0.20" is already used, "192.168.0.2" cannot be used.

NetBEUI

❶ **Click [NetBEUI].**

A list of printers that can be used by the NetBEUI protocol appears.

❷ **Click the printer you want to use, and then click [OK].**

Note

❒ Printers that respond to an broadcast from the computer will be displayed. To print to a printer not listed here, click **[Specify Address]**, and then type the NetBEUI address. Confirm the NetBEUI address on the network configuration page. For more information about the printing of configuration page, see "*Printing a Configuration Page*" in Administrator Reference 2 included as a PDF file on the CD-ROM.

❒ You cannot print to printers beyond routers.

IPP

❶ **Click [IPP].**

The IPP setting dialog box appears.

❷ **In [Printer URL], type "http://(printer's IP address)/printer" as the printer's IP address.**

(Example IP address is 192.168.15.16)

`http://192.168.15.16/printer`

❸ **As necessary, type the names to distinguish the printer in [IPP Port Name]. Type a name differing from those of any existing port names.**

If you omit this, the address typed in **[Printer URL]** will be set as the IPP port name.

❹ **If a proxy server and IPP user name are used, click [Detailed Settings] and configure the necessary settings.**

Note

❒ For more information about these settings, see SmartNetMonitor for Client Help.

10 Click [OK].

11 Confirm that the selected port is highlighted, and then click [Next].

12 Click [Finish].

13 Restart the computer after the installation is complete.

14 Set up the options with the printer driver.

Reference

For more information about settings for options, see P.17 *"Setting up Options"*.

Note

❒ The procedure to specify the "User Code" may differ depending on the printer language.

- RPCS
  You can specify the "User Code" when installing the printer driver. You cannot register or edit the "User Code" from the printer driver dialog box. To change the "User Code", you must uninstall the printer driver then register the new "User Code" during the re-install process.
- PCL 5c/PostScript3
  You can specify the "User Code" with the printer driver properties after installing the printer driver. See the Help file for the printer driver.

❒ You must set up the options when the bidirectional transmission is disabled. For more information about the status of the bidirectional transmission, see P.17 *"The conditions of the bidirectional transmissions"*.

Accessing the Port Settings Dialog Box

This section describes how to access the port settings dialog box to change the settings of SmartNetMonitor for Client.

Reference

For more information about these settings, see SmartNetMonitor for Client Help.

1 Click [Start] on the taskbar, point to [Settings], and then click [Printers].

2 Click to select the icon of the printer you want to use.

3 On the [File] menu, click [Properties].

4 Click the [Details] tab, and then click [Port Settings].

The SmartNetMonitor for Client settings dialog box appears.

Installing SmartNetMonitor for Client individually

① Close all applications that are running.

② Insert the CD-ROM into the CD-ROM drive.
The installer will start by Auto Run.

Important

❒ Never have two versions of the same printer driver installed on your system at the same time. When upgrading to a new version of the printer driver, delete the old version, and then install the new one.

Note

❒ Auto Run might not automatically work with certain OS settings. In this case, launch "INSTTOOL.EXE" located on the CD-ROM root directory.

③ Follow the instructions on the screen.

④ Select **[Custom]** installation, and then click **[Next]**.

⑤ Remove the check mark from the RPCS and PCL 5c printer driver.

⑥ Click to select **[SmartNetMonitor for Client]**, and then click **[Install]**.

⑦ Click **[OK]**.

⑧ Follow the instructions on the screen.

Note

❒ If you are required to restart the computer after the installation of SmartNetMonitor for Admin, restart the computer and continue with necessary configurations.

Printing with Parallel Connection

Select **[Typical]** installation when you use the printer with a parallel connection. **[Typical]** installation installs the PCL 5c and RPCS printer driver.

Installing the Printer Driver

1 Close all applications that are running.

2 Insert the CD-ROM into the CD-ROM drive.

The installer will start by Auto Run.

Important

- ❒ Never have two versions of the same printer driver installed on your system at the same time. When upgrading to a new version of the printer driver, delete the old version, and then install the new one.

Note

- ❒ Auto Run might not automatically work with certain OS settings. In this case, launch "INSTTOOL.EXE" located on the CD-ROM root directory.

3 Follow the instructions on the screen.

4 Select [Typical] installation, and then click [Next].

5 Follow the instructions on the screen.

6 Select [LPT1] when the [Select Port] dialog box appears, and then click [Next].

7 Click [Finish].

8 If you use a User Code, configure it.

9 Restart the computer after the installation is complete.

10 Set up the options with the printer driver.

Reference

For more information about settings for options, see P.17 *"Setting up Options"*.

Note

❒ The procedure to specify the "User Code" may differ depending on the printer language.

- RPCS
  You can specify the "User Code" when installing the printer driver. You cannot register or edit the "User Code" from the printer driver dialog box. To change the "User Code", you must uninstall the printer driver then register the new "User Code" during the re-install process.
- PCL 5c/PostScript3
  You can specify the "User Code" with the printer driver properties after installing the printer driver. See the Help file for the printer driver.

❒ You must set up the options when the bidirectional transmission is disabled. For more information about the status of the bidirectional transmission, see P.17 *"The conditions of the bidirectional transmissions"*.

Setting up Options

You must set up the options when the bidirectional transmission is disabled.

1 Click [Start] on the taskbar, point to [Settings], and then click [Printers].

The **[Printers]** window appears.

2 Click the icon of the printer you want to use.

3 On the [File] menu, click [Properties].

4 Click the [Accessories] tab.

Note

❒ If you use the RPCS printer driver, Click Change Accessories under the **[Printer Configuration]** tab to set up options.

5 Select options you have installed from the [Option] group. And make any settings you require.

6 Click [OK].

The conditions of the bidirectional transmissions

When the bidirectional transmissions is enabled, the information about the paper size and feed direction settings are automatically sent to the printer by the computer. You can also confirm the printer's condition from your computer.

- The bidirectional transmissions is supported by Windows 95/98/Me, Windows 2000 and Windows NT 4.0.
- If you use the RPCS ptinter driver and the bidirectional transmissions is enabled, on Windows 95/98/Me, the unavailable functions are grayed out in the **[Change Accessories]** dialog box of the printer properties. The **[Change Accessories]** dialog box is displayed by clicking the **[Change Accessories...]** button under the **[Printer Configuration]** tab.

Note

❒ The RPCS pritner driver supports the bidirectional transmission and update the printer status automatically.

❒ The PCL 5c printer driver supports the bidirectional transmission, you can update the printer status manually.

❒ The PostScript3 printer driver does not supports the bidirectional transmission.

To support the bidirectional transmissions, the following conditions below are required.

❖ Connecting with the parallel interface cable and the USB exchange cable.

- The computer supports the bidirectional transmissions.
- The Interface cable supports the bidirectional transmissions.
- The printer is connected to the computer using the standard parallel interface cable and the parallel connector.
- On Windows 95/98/Me, the **[Enable bi-directional support for this printer]** is selected in the **[Spool Settings...]** under the **[Details]** tab.

❖ Connecting with the network

- SmartNetMonitor for Client and the TCP/IP protocol are used.
- On Windows 95/98/Me, the **[Enable bi-directional support for this printer]** is selected in the **[Spool Settings...]** under the **[Details]** tab.
- SmartNetMonitor for Client included on the CD-ROM is installed.

Printing with a Print Server

Printing with a Windows 2000 or Windows NT 4.0 Print Server

This section describes the procedures for setting up a client in a network that uses Windows 2000 Server, Windows 2000 Professional, Windows NT 4.0 Server or Windows NT 4.0 Workstation as a print server.

To print from Windows 2000, you must install the printer driver and change the printer port to the print server.

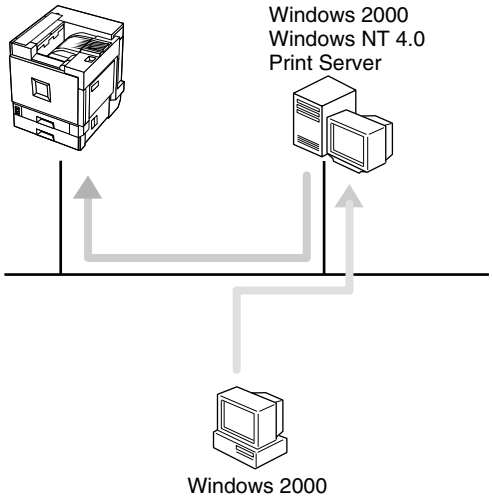

1 Close all applications that are running.

2 Insert the CD-ROM into the CD-ROM drive.

The installer will start by Auto Run.

Important

- ❒ Never have two versions of the same printer driver installed on your system at the same time. When upgrading to a new version of the printer driver, delete the old version, and then install the new one.

Note

- ❒ Auto Run might not automatically work with certain OS settings. In this case, launch "INSTTOOL.EXE" located on the CD-ROM root directory.

3 Follow the instructions on the screen.

4 Select [Typical] installation, and then click [Next].

5 **Follow the instructions on the screen.**

6 **Click [Add] when the "Select Port" dialog box appears.**

7 **Select [network printer], and then click [OK].**

8 **Double-click the computer name you want to use as a print server in the "Browse for Printer" window.**

9 **Select the printer you want to use, and then click [OK].**

10 **After confirming that the location for the selected printer shown, click [Next].**

11 **Follow the instructions on the screen.**

Note

❒ During installation, the **[Digital Signature Not Found]** dialog box may appear. In this case, click **[Yes]** to continue the installation.

12 **Restart the computer after the installation is complete.**

13 **Set up the options with the printer driver.**

Note

❒ You can specify the "User Code" with the printer properties after installing the printer driver. See the Help file for the printer driver.

Reference

For more information about settings for options, see P.31 *"Setting up Options"*.

Printing without Using a Print Server

Configuring the Protocols

Configuring TCP/IP and IPP for Printing

Follow these instructions to configure the printer and Windows 2000 to use the TCP/IP protocol and IPP.

❖ **Configuring the printer**

Configure the printer to use the TCP/IP protocol.

- Confirm that the TCP/IP protocol is set to be active. (The factory default is active.)
- Assign an IP address and make other settings required for using the TCP/IP protocol.

Reference

For more information about how to make the above settings, see "*Configuring the printer for the Network*" in Administrator Reference 1.

If DHCP is used to assign IP addresses, see Appendix, "*When Using DHCP*" in Administrator Reference 2 included as a PDF file on the CD-ROM.

Note

❒ After setting the IP address, use the ping command to confirm that it has been set correctly.

① Click **[Start]**, point to **[Programs]**, point to **[Accessories]**, and then click **[Command Prompt]**.

② Type the following. (Example IP address is 192.168.15.16)

```
C:> ping 192.168.15.16
```

If the address has been configured correctly, the following message appears.

```
Reply from 192.168.15.16 : bytes=32 time<10ms TTL=32
```

If the address has been configured incorrectly, the following message appears.

```
Request timed out.
```

❖ **Configuring a Windows 2000 computer**

Follow these steps to configure a Windows 2000 computer to use the TCP/IP protocol.

① Click **[Start]** on the taskbar, point to **[Settings]**, and then click **[Network and Dial-up Connections]**.

② Click **[Local Area Connection]**.

③ On the **[File]** menu, click **[Properties]**.

④ Confirm that "Internet Protocol (TCP/IP)" is selected in the **[Components checked are used by this connection:]** box under the **[General]** tab.

Note

❒ If the check box of TCP/IP protocol is not selected, select the box.

❒ If the TCP/IP protocol is not installed, click **[Install...]** under the **[General]** tab and install it. For more information about installing the TCP/IP protocol, see Windows 2000 Help.

⑤ Configure the TCP/IP protocols with the appropriate IP address, subnet mask and other settings.
Confirm with the network administrator that the settings are correct.

Configuring NetBEUI for Printing

Follow these instructions to configure the Network Interface Board and Windows 2000 to use the NetBEUI protocol.

❖ Configuring the printer

Configure the printer to use the NetBEUI protocol.

- Confirm that the NetBEUI protocol is set to be active. (The factory default is active.)

Reference

For more information about how to make the above settings, see "*Configuring the printer for the Network*" in Administrator Reference 1.

❖ Configuring a Windows 2000 computer

Follow these steps to configure a Windows 2000 computer to use the NetBEUI protocol.

① Click **[Start]** on the taskbar, point to **[Settings]**, and then click **[Network and Dial-up Connections]**.

② Click **[Local Area Connection]**.

③ On the **[File]** menu, click **[Properties]**.

④ Confirm that "NetBEUI Protocol" is selected in the **[Components checked are used by this connection:]** box under the **[General]** tab.

Note

❒ If the check box of the NetBEUI protocol is not selected, select the box.

❒ If the NetBEUI protocol is not installed, click **[Install...]** under the **[General]** tab and install it. For more information about installing the NetBEUI protocol, see Windows 2000 Help.

Installing Software

Preparation

Select **[Network]** installation when you print without using a print server.

[Network] installation installs the PCL 5c and RPCS printer driver and SmartNetMonitor for Client. When you print using TCP/IP, NetBEUI or IPP protocol in a Peer-to-Peer Network, you must select this installation.

[Custom] installation allows you to install SmartNetMonitor for Client separately.

Installing by "Network" installation

1. **Close all applications that are running.**
2. **Insert the CD-ROM into the CD-ROM drive.**

   The installer will start by Auto Run.

   Important

   - ❒ Never have two versions of the same printer driver installed on your system at the same time. When upgrading to a new version of the printer driver, delete the old version, and then install the new one.

   Note

   - ❒ Auto Run might not automatically work with certain OS settings. In this case, launch "INSTTOOL.EXE" located on the CD-ROM root directory.
3. **Follow the instructions on the screen.**
4. **Select [Network] installation when the selection screen appears.**
5. **Follow the instructions on the screen.**
6. **Select a printer you want to use when the [Select Printer] dialog box appears.**
7. **Click [Add..] when the [Select Port] dialog box appears.**
8. **Select [SmartNetMonitor for Client], and then click [OK].**

   Available printers will be listed.

9 Select a printer you want to use.

TCP/IP

❶ **Click the printer you want to use, and then click [OK].**

Note

- ❒ Printers that respond to an IP broadcast from the computer will be displayed. To print to a printer not listed here, click **[Specify Address]**, and then type the IP address or host name.
- ❒ You cannot add an address partially similar to that already used. For example, when "192.168.0.2" is already used, "192.168.0.2xx" cannot be used. Similarly, when "192.168.0.20" is already used, "192.168.0.2" cannot be used.

NetBEUI

❶ **Click [NetBEUI].**

A list of printers that can be used by the NetBEUI protocol appears.

❷ **Click the printer you want to use, and then click [OK].**

Note

- ❒ Printers that respond to an broadcast from the computer will be displayed. To print to a printer not listed here, click **[Specify Address]**, and then type the NetBEUI address. Confirm the NetBEUI address on the network configuration page. For more information about the printing of configuration page, see "*Printing a Configuration Page*" in Administrator Reference 2 included as a PDF file on the CD-ROM.
- ❒ You cannot print to printers beyond routers.

IPP

❶ **Click [IPP].**

The IPP setting dialog box appears.

❷ **In [Printer URL], type "http://(printer's IP address)/printer" as the printer's IP address.**

(Example IP address is 192.168.15.16)

`http://192.168.15.16/printer`

❸ **As necessary, type the names to distinguish the printer in [IPP Port Name]. Type a name differing from those of any existing port names.**

If you omit this, the address typed in **[Printer URL]** will be set as the IPP port name.

❹ **If a proxy server and IPP user name are used, click [Detailed Settings] and configure the necessary settings.**

Note

❒ For more information about these settings, see SmartNetMonitor for Client Help.

10 Click [OK].

11 Confirm that the selected port is highlighted, and then click [Next].

12 Click [Finish].

Note

❒ During installation, the **[Digital Signature Not Found]** dialog box may appear. In this case, click **[Yes]** to continue the installation.

13 Restart the computer after the installation is complete.

14 Set up the options with the printer driver.

Reference

For more information about settings for options, see P.31 *"Setting up Options"*.

Note

❒ You can specify the "User Code" with the printer properties after installing the printer driver. See the Help file for the printer driver.

❒ You must set up the options when the bidirectional transmission is disabled. For more information about the status of the bidirectional transmission, see P.17 *"The conditions of the bidirectional transmissions"*.

Accessing the Port Settings Dialog Box

This section describes how to access the port settings dialog box to change the settings of SmartNetMonitor for Client.

Reference

For more information about these settings, see SmartNetMonitor for Client Help.

1 Click [Start] on the taskbar, point to [Settings], and click [Printers].

2 Click the icon of the printer you want to use.

3 On the [File] menu, click [Properties].

4 Click the [Details] tab, and then click [Port Settings].

The SmartNetMonitor for Client settings dialog box appears.

Installing SmartNetMonitor for Client individually

① Close all applications that are running.

② Insert the CD-ROM into the CD-ROM drive.
The installer will start by Auto Run.

Important

❒ Never have two versions of the same printer driver installed on your system at the same time. When upgrading to a new version of the printer driver, delete the old version, and then install the new one.

Note

❒ Auto Run might not automatically work with certain OS settings. In this case, launch "INSTTOOL.EXE" located on the CD-ROM root directory.

③ Follow the instructions on the screen.

④ Select **[Custom]** installation, and then click **[Next]**.

⑤ Remove the check mark from the RPCS and PCL 5c printer driver.

⑥ Click to select **[SmartNetMonitor for Client]**, and then click **[Install]**.

⑦ Click **[OK]**.

⑧ Follow the instructions on the screen.

Note

❒ If you are required to restart the computer after the installation of SmartNetMonitor for Admin, restart the computer and continue with necessary configurations.

Printing with a Standard TCP/IP Port

Preparation

Select **[Typical]** installation when you use the printer with Standard TCP/IP port.

[Typical] installation installs the PCL 5c and RPCS printer driver.

Installing the Printer Driver

1 Close all applications that are running.

2 Insert the CD-ROM into the CD-ROM drive.

The installer will start by Auto Run.

Important

- ❒ Never have two versions of the same printer driver installed on your system at the same time. When upgrading to a new version of the printer driver, delete the old version, and then install the new one.

Note

- ❒ Auto Run might not automatically work with certain OS settings. In this case, launch "INSTTOOL.EXE" located on the CD-ROM root directory.

3 Follow the instructions on the screen.

4 Select [Typical] installation, and then click [Next].

5 Follow the instructions on the screen.

6 Select [Standard TCP/IP] when the "Select Port" dialog box appears, and then click [Next].

7 Click [Next] in the "Add Standard TCP/IP Printer Port Wizard" window.

8 Type the printer name or IP address in the "Printer Name or IP Address" box.

9 Click [Finish] in the "Add Standard TCP/IP Printer Port Wizard" window.

10 Confirm that the selected port has been displayed in the "Port" box, and then click [Next].

Note

- ❒ During installation, the **[Digital Signature Not Found]** dialog box may appear. In this case, click **[Yes]** to continue the installation.

11 Click [Finish].

Note

- ❒ You can specify the "User Code" with the printer properties after installing the printer driver. See the Help file for the printer driver.
- ❒ You must set up the options when the bidirectional transmission is disabled. For more information about the status of the bidirectional transmission, see P.17 *"The conditions of the bidirectional transmissions"*

12 Restart the computer after the installation is complete.

13 Set up the options with the printer driver.

14 You must set up the options when the bidirectional transmission is disabled.

Reference

For more information about the status of the bidirectional transmission, see P.17 *"The conditions of the bidirectional transmissions"*.

For more information about settings for options, see P.31 *"Setting up Options"*.

Configuring LPR Port Printing

Preparation

Select **[Typical]** installation when you use the printer with the LPR port.

[Typical] installation installs the PCL 5c and RPCS printer driver.

Installing the Printer Driver

1 Close all applications that are running.

2 Insert the CD-ROM into the CD-ROM drive.

The installer will start by Auto Run.

Important

- ❒ Never have two versions of the same printer driver installed on your system at the same time. When upgrading to a new version of the printer driver, delete the old version, and then install the new one.

Note

- ❒ Auto Run might not automatically work with certain OS settings. In this case, launch "INSTTOOL.EXE" located on the CD-ROM root directory.

3 Follow the instructions on the screen.

4 **Select [Typical] installation, and then click [Next].**

5 **Follow the instructions on the screen.**

6 **Select [LPR Port] when the "Select Port" dialog box appears, and then click [Next].**

7 **Type the printer's IP address in the "Name or address of server providing lpd" box.**

8 **Type "lp" in the "Name of printer or print queue on that server" box, and then click [OK].**

9 **Confirm that the selected port has been displayed in the "Port" box, and then click [Next].**

10 **Click [Finish].**

Note

- ❒ During installation, the **[Digital Signature Not Found]** dialog box may appear. In this case, click **[Yes]** to continue the installation.

11 **Restart the computer after the installation is complete.**

12 **Set up the options with the printer driver.**

Reference

For more information about settings for options, see P.31 *"Setting up Options"*.

Note

- ❒ You can specify the "User Code" with the printer properties after installing the printer driver. See the Help file for the printer driver.
- ❒ You must set up the options when the bidirectional transmission is disabled. For more information about the status of the bidirectional transmission, see P.17 *"The conditions of the bidirectional transmissions"*.

Printing with Parallel Connection

Preparation

Select **[Typical]** installation when you use the printer with parallel connection.

[Typical] installation installs the PCL 5c and RPCS printer driver.

Installing a Printer Driver

1 Close all applications that are running.

2 Insert the CD-ROM into the CD-ROM drive.

The installer will start by Auto Run.

Important

- ❒ Never have two versions of the same printer driver installed on your system at the same time. When upgrading to a new version of the printer driver, delete the old version, and then install the new one.

Note

- ❒ Auto Run might not automatically work with certain OS settings. In this case, launch "INSTTOOL.EXE" located on the CD-ROM root directory.

3 Follow the instructions on the screen.

4 Select [Typical] installation, and then click [Next].

5 Follow the instructions on the screen.

6 Select [LPT1] when the [Select Port] dialog box appears, and then click [Next].

7 Click [Finish].

Note

- ❒ During installation, the **[Digital Signature Not Found]** dialog box may appear. In this case, click **[Yes]** to continue the installation.

8 Restart the computer after the installation is complete.

9 Set up the options with the printer driver.

Reference

For more information about settings for options, see P.31 *"Setting up Options"*.

Note

- ❒ You can specify the "User Code" with the printer properties after installing the printer driver. See the Help file for the printer driver.
- ❒ You must set up the options when the bidirectional transmission is disabled. For more information about the status of the bidirectional transmission, see P.17 *"The conditions of the bidirectional transmissions"*.

Setting up Options

You must set up the options when the bidirectional transmission is disabled.

1. **Click [Start] on the taskbar, point to [Settings], and then click [Printers].**
   The **[Printers]** window appears.
2. **Click the icon of the printer you want to use.**
3. **On the [File] menu, click [Properties].**
4. **Click the [Accessories] tab.**

   Note
   - ❒ If you use the RPCS printer driver, Click the **[Change Accessories]** tab.
   - ❒ If you use the PS printer driver, Click the **[Device Settings]** tab.
5. **Select options you have installed from the [Option] group. And make any settings you require.**
6. **Click [OK].**

The conditions of the bidirectional transmissions

When the bidirectional transmissions is enabled, the information about the paper size and feed direction settings are automatically sent to the printer by the computer. You can also confirm the printer's condition from your computer.

- The bidirectional transmissions is supported by Windows 95/98/Me, Windows 2000 and Windows NT 4.0.
- If you use the RPCS ptinter driver and the bidirectional transmissions is enabled, on Windows 2000, the **[Change Accessories]** tab are grayed out.

Note

- ❒ The RPCS pritner driver supports the bidirectional transmission and update the printer status automatically.
- ❒ The PCL 5c printer driver supports the bidirectional transmission, you can update the printer status manually.
- ❒ The PostScript3 printer driver does not supports the bidirectional transmission.

To support the bidirectional transmissions, the following conditions below are required.

❖ Connecting with the parallel interface cable and the USB exchange cable.

- The computer supports the bidirectional transmissions.
- The Interface cable supports the bidirectional transmissions.
- The printer is connected to the computer using the standard parallel interface cable and the parallel connector.
- On Windows 2000, the **[Enable bidirectional support]** is selected and **[Enable printer pooling]** is not selected under the **[ports]** tab.

❖ Connecting with the network

- SmartNetMonitor for Client and the TCP/IP protocol are used.
- On Windows 2000, the **[Enable bidirectional support]** is selected and **[Enable printer pooling]** is not selected under the **[ports]** tab.
- SmartNetMonitor for Client included on the CD-ROM is installed.

4. Windows NT 4.0 Configuration

Printing with a Print Server

Printing with a Windows 2000 or Windows NT 4.0 Print Server

This section describes the procedures for setting up a client in a network that uses Windows 2000 Server, Windows 2000 Professional, Windows NT 4.0 Server or Windows NT 4.0 Workstation as a print server.

To print from Windows NT 4.0, you must install the printer driver and change the printer port to the print server.

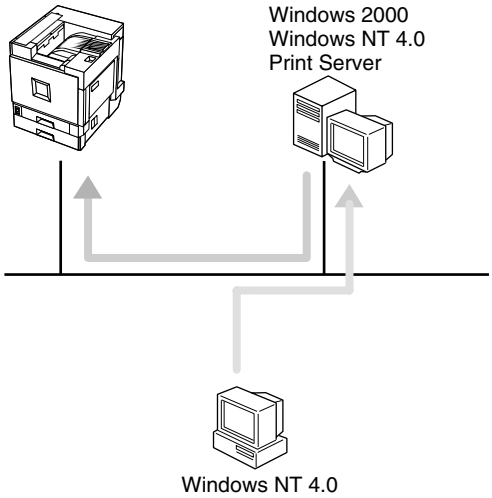

1 Close all applications that are running.

2 Insert the CD-ROM into the CD-ROM drive.

The installer will start by Auto Run.

Important

❒ Never have two versions of the same printer driver installed on your system at the same time. When upgrading to a new version of the printer driver, delete the old version, and then install the new one.

Note

❒ Auto Run might not automatically work with certain OS settings. In this case, launch "INSTTOOL.EXE" located on the CD-ROM root directory.

3 Follow the instructions on the screen.

4 Select [Typical] installation, and then click [Next].

5 **Follow the instructions on the screen.**

6 **Click [Add] when the "Select Port" dialog box appears.**

7 **Select [network printer], and then click [OK].**

8 **Double-click the computer name you want to use as a print server in the "Browse for Printer" window.**

9 **Select the printer you want to use, and then click [OK].**

10 **After confirming that the location for the selected printer shown, click [Next].**

11 **Follow the instructions on the screen.**

12 **Restart the computer after the installation is complete.**

13 **Set up the options with the printer driver.**

Note

❒ You can specify the "User Code" with the printer properties after installing the printer driver. See the Help file for the printer driver.

Reference

For more information about settings for options, see P.44 *"Setting up Options"*.

Printing without Using a Print Server

Configuring the Protocols

Configuring TCP/IP and IPP for Printing

Follow these instructions to configure the printer and Windows NT 4.0 to use the TCP/IP protocol and IPP.

❖ **Configuring the printer**

Configure the printer to use the TCP/IP protocol.

- Confirm that the TCP/IP protocol is set to be active. (The factory default is active.)
- Assign an IP address and make other settings required for using the TCP/IP protocol.

Reference

For more information about how to make the above settings, see "*Configuring the printer for the Network*" in Administrator Reference 1.

If DHCP is used to assign IP addresses, see Appendix, "*When Using DHCP*" in Administrator Reference 2 included as a PDF file on the CD-ROM.

Note

❒ After setting the IP address, use the ping command to confirm that it has been set correctly.

① Click **[Start]**, point to **[Programs]**, and then click **[Command Prompt]**.

② Type the following. (Example IP address is 192.168.15.16)

```
C:> ping 192.168.15.16
```

If the address has been configured correctly, the following message appears.

```
Reply from 192.168.15.16 : bytes=32 time<10ms TTL=32
```

If the address has been configured incorrectly, the following message appears.

```
Request timed out.Request timed out.
```

❖ **Configuring a Windows NT 4.0 computer**

Follow these steps to configure a Windows NT 4.0 computer to use the TCP/IP protocol.

① Open **[Control Panel]** and double-click the **[Network]** icon. Confirm that "TCP/IP Protocol" is listed in the **[Network protocols]** box under the **[Protocols]** tab.

Note

❒ If the TCP/IP protocol is not installed, click **[Add]** under the **[Protocols]** tab and install it. For more information about installing the TCP/IP protocol, see Windows NT 4.0 Help.

② Configure the TCP/IP protocols with the appropriate IP address, subnet mask and other settings.
Confirm with the network administrator that the settings are correct.

③ Click the **[Services]** tab, and confirm that "Microsoft TCP/IP Printing" is installed.
If "Microsoft TCP/IP Printing" is not installed, click **[Add]** under the **[Services]** tab, and install it. For more information about installing and configuring network services, see Windows NT 4.0 Help.

Configuring NetBEUI for Printing

Follow these instructions to configure the printer and Windows NT 4.0 to use the NetBEUI protocol.

❖ Configuring the printer

Configure the printer to use the NetBEUI protocol.

- Confirm that the NetBEUI protocol is set to be active. (The factory default is active.)

Reference

For more information about how to make the above settings, see "*Configuring the printer for the Network*" in Administrator Reference 1.

❖ Configuring a Windows NT 4.0 computer

Install the NetBEUI protocol on the Windows NT 4.0 computer, and change the LAN adapter number (Lana Number).

① Open **[Control Panel]** and double-click the **[Network]** icon. Confirm that "NetBEUI Protocol" is listed in the **[Network Protocols]** box under the **[Protocols]** tab.

Note

❒ If the NetBEUI protocol is not installed, click **[Add...]** under the **[Protocols]** tab, and install it. For more information about installing the NetBEUI protocol, see Windows NT 4.0 Help.

② Change the Lana Number. Click the **[Services]** tab, click "NetBIOS Interface" in the **[Network Services:]** box , and click **[Properties]**.

③ Click the Lana Number corresponding the Nbf protocol of the **[Network Route]** headline, and click **[Edit]**.

④ Type "0" as the Lana Number.

Note

❒ If the other protocol's Lana Number is configured with "0", you must change the Lana Number a number with other than "0".

⑤ Click **[OK]**.

⑥ Click **[Close]**, and close the **[Network]** dialog box.

⑦ After confirming the message to restart, click **[Yes]**.

Note

❒ After you change the Lana Number, you must restart the computer.

Installing Software

Preparation

Select **[Network]** installation when you print without using a print server.

[Network] installation installs the PCL 5c and RPCS printer driver and SmartNetMonitor for Client. When you print using TCP/IP, NetBEUI or IPP protocol in a Peer-to-Peer Network, you must select this installation.

[Custom] installation allows you to install SmartNetMonitor for Client separately.

Installing by "Network" installation

4

1 Close all applications that are running.

2 Insert the CD-ROM into the CD-ROM drive.

The installer will start by Auto Run.

Important

- ❒ Never have two versions of the same printer driver installed on your system at the same time. When upgrading to a new version of the printer driver, delete the old version, and then install the new one.

Note

- ❒ Auto Run might not automatically work with certain OS settings. In this case, launch "INSTTOOL.EXE" located on the CD-ROM root directory.

3 Follow the instructions on the screen.

4 Select [Network] installation when the selection screen appears.

5 Follow the instructions on the screen.

6 Select a printer you want to use when the [Select Printer] dialog box appears.

7 Click [Add..] when the [Select Port] dialog box appears.

8 Select [SmartNetMonitor for Client], and then click [OK].

Available printers will be listed.

9 Select a printer you want to use.

TCP/IP

❶ **Click the printer you want to use, and then click [OK].**

Note

- ❒ Printers that respond to an IP broadcast from the computer will be displayed. To print to a printer not listed here, click **[Specify Address]**, and then type the IP address or host name.
- ❒ You cannot add an address partially similar to that already used. For example, when "192.168.0.2" is already used, "192.168.0.2xx" cannot be used. Similarly, when "192.168.0.20" is already used, "192.168.0.2" cannot be used.

NetBEUI

❶ **Click [NetBEUI].**

A list of printers that can be used by the NetBEUI protocol appears.

❷ **Click the printer you want to use, and then click [OK].**

Note

- ❒ Printers that respond to an broadcast from the computer will be displayed. To print to a printer not listed here, click **[Specify Address]**, and then type the NetBEUI address. Confirm the NetBEUI address on the network configuration page. For more information about the printing of configuration page, see "*Printing a Configuration Page*" in Administrator Reference 2 included as a PDF file on the CD-ROM.
- ❒ You cannot print to printers beyond routers.

IPP

❶ **Click [IPP].**

The IPP settings dialog box appears.

❷ **In [Printer URL], type "http://(printer's IP address)/printer" as the printer's IP address.**

(Example IP address is 192.168.15.16)

`http://192.168.15.16/printer`

❸ **As necessary, type the names to distinguish the printer in [IPP Port Name]. Type a name differing from those of any existing port names.**

If you omit this, the address typed in **[Printer URL]** will be set as the IPP port name.

❹ **If a proxy server and IPP user name are used, click [Detailed Settings] and configure the necessary settings.**

Note

❒ For more information about these settings, see SmartNetMonitor for Client online Help.

10 Click [OK].

11 Confirm that the selected port is highlighted, and then click [Next].

12 Click [Finish].

13 Restart the computer after the installation is complete.

14 Set up the options with the printer driver.

Reference

For more information about settings for options, see P.44 *"Setting up Options"*.

Note

❒ You can specify the "User Code" with the printer properties after installing the printer driver. See the Help file for the printer driver.

❒ You must set up the options when the bidirectional transmission is disabled. For more information about the status of the bidirectional transmission, see P.44 *"The conditions of the bidirectional transmissions"*.

Accessing the Port Settings Dialog Box

This section describes how to access the port settings dialog box to change the settings of SmartNetMonitor for Client.

Reference

For more information about these settings, see SmartNetMonitor for Client Help.

1 Click [Start] on the taskbar, point to [Settings], and click [Printers].

2 Click the icon of the printer you want to use.

3 On the [File] menu, click [Properties].

4 Click the [Details] tab and click [Port Settings].

The SmartNetMonitor for Client settings dialog box appears.

Installing SmartNetMonitor for Client individually

① Close all applications that are running.

② Insert the CD-ROM into the CD-ROM drive.
The installer will start by Auto Run.

Important

❒ Never have two versions of the same printer driver installed on your system at the same time. When upgrading to a new version of the printer driver, delete the old version, and then install the new one.

Note

❒ Auto Run might not automatically work with certain OS settings. In this case, launch "INSTTOOL.EXE" located on the CD-ROM root directory.

③ Follow the instructions on the screen.

④ Select **[Custom]** installation, and then click **[Next]**.

⑤ Remove the check mark from the RPCS and PCL 5c printer driver.

⑥ Click to select **[SmartNetMonitor for Client]**, and then click **[Install]**.

⑦ Click **[OK]**.

⑧ Follow the instructions on the screen.

Note

❒ If you are required to restart the computer after the installation of SmartNetMonitor for Admin, restart the computer and continue with necessary configurations.

Configuring LPR Port Printing

Preparation

Select **[Typical]** installation when you use the printer with the LPR port.

[Typical] installation installs the PCL 5c and RPCS printer driver.

Installing the Printer Driver

1. **Close all applications that are running.**
2. **Insert the CD-ROM into the CD-ROM drive.**

   The installer will start by Auto Run.

   Important

   ❒ Never have two versions of the same printer driver installed on your system at the same time. When upgrading to a new version of the printer driver, delete the old version, and then install the new one.

   Note

   ❒ Auto Run might not automatically work with certain OS settings. In this case, launch "INSTTOOL.EXE" located on the CD-ROM root directory.
3. **Follow the instructions on the screen.**
4. **Select [Typical] installation, and then click [Next].**
5. **Follow the instructions on the screen.**
6. **Select [LPR Port] when the "Select Port" dialog box appears, and then click [Next].**
7. **Type the printer's IP address in the "Name or address of server providing lpd" box.**
8. **Type "lp" in the "Name of printer or print queue on that server" box, and then click [OK].**
9. **Confirm that the selected port has been displayed in the "Port" box, and then click [Next].**
10. **Click [Finish].**
11. **Restart the computer after the installation is complete.**

12 Set up the options with the printer driver.

Reference

For more information about settings for options, see P.44 *"Setting up Options"*.

Note

- ❒ You can specify the "User Code" with the printer properties after installing the printer driver. See the Help file for the printer driver.
- ❒ You must set up the options when the bidirectional transmission is disabled. For more information about the status of the bidirectional transmission, see P.44 *"The conditions of the bidirectional transmissions"*.

Printing with a Parallel Connection

Preparation

Select **[Typical]** installation when you use the printer with parallel connection. **[Typical]** installation installs the PCL 5c and RPCS printer driver.

Installing a Printer Driver

Preparation

The target printer must be turned on before starting the installation process.

1 Close all applications that are running.

2 Insert the CD-ROM into the CD-ROM drive.

The installer will start by Auto Run.

Important

- ❒ Never have two versions of the same printer driver installed on your system at the same time. When upgrading to a new version of the printer driver, delete the old version, and then install the new one.

Note

- ❒ Auto Run might not automatically work with certain OS settings. In this case, launch "INSTTOOL.EXE" located on the CD-ROM root directory.

3 Follow the instructions on the screen.

4 Select [Typical] installation, and then click [Next].

5 Follow the instructions on the screen.

6 Select [LPT1] when the [Select Port] dialog box appears, and then click [Next].

7 Click [Finish].

8 Restart the computer after the installation is complete.

9 Set up the options with the printer driver.

Reference

For more information about settings for options, see P.44 *"Setting up Options"*.

Note

- ❒ You can specify the "User Code" with the printer properties after installing the printer driver. See the Help file for the printer driver.
- ❒ You must set up the options when the bidirectional transmission is disabled. For more information about the status of the bidirectional transmission, see P.44 *"The conditions of the bidirectional transmissions"*.

Setting up Options

You must set up the options when the bidirectional transmission is disabled.

1. **Click [Start] on the taskbar, point to [Settings], and then click [Printers].**
   The **[Printers]** window appears.
2. **Click the icon of the printer you want to use.**
3. **On the [File] menu, click [Properties].**
4. **Click the [Accessories] tab.**

   Note
   ❒ If you use the RPCS printer driver, Click the **[Change Accessories]** tab.
5. **Select options you have installed from the [Option] group. And make any settings you require.**
6. **Click [OK].**

The conditions of the bidirectional transmissions

When the bidirectional transmissions is enabled, the information about the paper size and feed direction settings are automatically sent to the printer by the computer. You can also confirm the printer's condition from your computer.

- The bidirectional transmissions is supported by Windows 95/98/Me, Windows 2000 and Windows NT 4.0.
- If you use the RPCS ptinter driver and the bidirectional transmissions is enabled, on Windows NT 4.0, the **[Change Accessories]** tab are grayed out.

Note

❒ The RPCS pritner driver supports the bidirectional transmission and update the printer status automatically.

❒ The PCL 5c printer driver supports the bidirectional transmission, you can update the printer status manually.

❒ The PostScript3 printer driver does not supports the bidirectional transmission.

To support the bidirectional transmissions, the following conditions below are required.

❖ Connecting with the parallel interface cable and the USB exchange cable.

- The computer supports the bidirectional transmissions.
- The Interface cable supports the bidirectional transmissions.
- The printer is connected to the computer using the standard parallel interface cable and the parallel connector.
- On Windows NT 4.0, the **[Enable bidirectional support]** is selected and **[Enable printer pooling]** is not selected under the **[ports]** tab.

❖ Connecting with the network

- SmartNetMonitor for Client and the TCP/IP protocol are used.
- On Windows NT 4.0, the **[Enable bidirectional support]** is selected and **[Enable printer pooling]** is not selected under the **[ports]** tab.
- SmartNetMonitor for Client included on the CD-ROM is installed.

INDEX

A

Accessing the Port Settings Dialog Box
Windows 2000, 25
Windows 95/98/Me, 13
Windows NT 4.0, 39

C

configuration
Windows 2000, 19
Windows NT 4.0, 33
Configuring LPR Port Printing
Windows 2000, 28
Windows NT 4.0, 41
Configuring NetBEUI for Printing
Windows 2000, 22
Windows 95/98/Me, 10
Windows NT 4.0, 36
Configuring Protocols
Windows 95/98/Me, 9
Configuring TCP/IP and IPP for Printing
Windows 2000, 21
Windows 95/98/Me, 9
Windows NT 4.0, 35
Configuring the Protocols
Windows 2000, 21
Windows NT 4.0, 35
Confirming a Network Environment, 1

I

Installing by "Network" installation
Windows 2000, 23
Windows 95/98/Me, 11
Windows NT 4.0, 37
Installing, Printer Driver
Windows 2000, 30
Windows 95/98/Me, 15
Windows NT 4.0, 43
installing, SmartNetMonitor for Client
Windows 2000, 26
Windows 95/98/Me, 14
Windows NT 4.0, 40
Installing Software
Windows 2000, 23
Windows NT 4.0, 37
Installing software
Windows 95/98/Me, 11

L

LAN adapter number (Lana Number), 36

P

Printing with a Parallel Connection
Windows NT 4.0, 43
Printing with a Print Server
Windows 2000, 19
Windows 95/98/Me, 7
Windows NT 4.0, 33
Printing with a Standard TCP/IP Port
Windows 2000, 27
Printing without Using a Print Server
Windows 2000, 21
Windows 95/98/Me, 9
Windows NT 4.0, 35
Printing with Parallel Connection
Windows 2000, 30
Windows 95/98/Me, 15

S

Setting up Options
Windows 2000, 31
Windows 95/98/Me, 17
Windows NT 4.0, 44

T

The conditions of the bidirectional transmissions, 17, 31, 44

W

Windows 2000, 19
Windows 95/98/Me Configuration, 7
Windows NT 4.0, 33

Copyright © 2001

UE USA G060-6940

Introduction **5**
How to Read This Manual **6**

1. Macintosh Configuration

Configuring Macintosh **8**
Changing to EtherTalkChanging to EtherTalk 9
Configuring the Printer 9
Changing the Printer Name 10
Changing the Zone 10

2. NetWare Configuration

Windows 95/98/Me **11**
Windows 2000 ..... **14**
Windows NT 4.0 ..... **17**

3. Software and Utilities Included on the CD-ROM

Software and Utilities Included on the CD-ROM **20**
Printer Drivers for This Printer **21**
SmartNetMonitor for Admin **23**
SmartNetMonitor for Client **25**

4. Setting up the Printer Driver and Canceling a Print Job

PCL 5c - Accessing the Printer Properties 28
Windows 95/98/Me - Accessing the Printer Properties 28
Windows 2000 - Accessing the Printer Properties 30
Windows NT 4.0 - Accessing the Printer Properties 33
RPCS - Accessing the Printer Properties 36
Windows 95/98/Me - Accessing the Printer Properties 36
Windows 2000 - Accessing the Printer Properties 38
Windows NT 4.0 - Accessing the Printer Properties 41
PostScript 3 - Setting up for Printing 44
Windows 95/98/Me - Accessing the Printer Properties 44
Windows 2000 - Accessing the Printer Properties 46
Windows NT 4.0 - Accessing the Printer Properties 49
Macintosh - Setting up for Printing 52
Canceling a Print Job 54
Windows 95/98/Me - Canceling a Print Job 54
Windows 2000 - Canceling a Print Job 55
Windows NT 4.0 - Canceling a Print Job 57

5. Uninstalling the Printer Driver

Uninstalling the PCL 5c Printer Driver 59
Windows 95/98 - Uninstalling the PCL 5c Printer Driver 59
Windows 2000 - Uninstalling the PCL 5c Printer Driver 60
Windows NT 4.0 - Uninstalling the PCL 5c Printer Driver 61
Uninstalling the RPCS Printer Driver 62
Windows 95/98 - Uninstalling the RPCS Printer Driver 62
Windows 2000 - Uninstalling the RPCS Printer Driver 63
Windows NT 4.0 - Uninstalling the RPCS Printer Driver 64
Uninstalling the PostScript 3 Printer Driver 65
Windows 95/98 - Uninstalling the PostScript 3 Printer Driver 65
Windows 2000 - Uninstalling the PostScript 3 Printer Driver 66
Windows NT 4.0 - Uninstalling the PostScript 3 Printer Driver 67
Macintosh - Uninstalling the PostScript 3 Printer Driver 67

6. Sample Print/Locked Print

Sample Print 68
Printing the Remaining Sets 70
Deleting a Sample Print File 72
Checking the Error Log 74
Locked Print 76
Entering the Password 78
Deleting the Locked Print File 80
Checking the Error Log 82

7. Troubleshooting

Checking the Printer Status 84
SmartNetMonitor for Client 84
Web Browser 85

8. Appendix

Color Guide 86
Color Printing Basics 86
Staple and Punch Position 89
Stapling 89
Punching 91
Collate and Job Separation 94
INDEX 96

Introduction

To get maximum versatility from this machine all operators should carefully read and follow the instructions in this manual. Please keep this manual in a handy place near the machine.

Please read the Safety Information in the "Setup Guide" before using this machine. It contains important information related to USER SAFETY and PREVENTING EQUIPMENT PROBLEMS.

Trademarks

AppleTalk, EtherTalk, LaserWriter, Macintosh are registered trademarks of Apple Computer, Inc.

Ethernet is a registered trademark of Xerox Corporation.

Microsoft, Windows, Windows NT are registered trademarks of Microsoft Corporation in the United States and/or other countries.

Novell, NetWare are registered trademarks of Novell, Inc.

PostScript is a registered trademark of Adobe Systems, Incorporated.

PowerPC is a registered trademark of International Business Machines Corporation.

PCL is a registered trademark of Hewlett-Packard Company.

Solaris is a trademark or registered trademark of Sun Microsystems, Inc. in the United States and other countries.

Other product names used herein are for identification purposes only and might be trademarks of their respective companies. We disclaim any and all rights in those marks.

Note

The proper names of the Windows operating systems are as follows:

- Microsoft® Windows® 95 operating system
- Microsoft® Windows® 98 operating system
- Microsoft® Windows® Millennium Edition (Windows Me)
- Microsoft® Windows® 2000 Professional
- Microsoft® Windows® 2000 Server
- Microsoft® Windows NT® Server operating system Version 4.0
- Microsoft® Windows NT® Workstation operating system Version 4.0

How to Read This Manual

Symbols

In this manual, the following symbols are used:

⚠ *WARNING:*

This symbol indicates a potentially hazardous situation which, if instructions are not followed, could result in death or serious injury.

⚠ *CAUTION:*

This symbol indicates a potentially hazardous situation which, if instructions are not followed, may result in minor or moderate injury or damage to property.

* The statements above are notes for your safety.

Important

If this instruction is not followed, paper might be misfed, originals might be damaged, or data might be lost. Be sure to read this.

Preparation

This symbol indicates the prior knowledge or preparations required before operating.

Note

This symbol indicates precautions for operation, or actions to take after misoperation.

Limitation

This symbol indicates numerical limits, functions that cannot be used together, or conditions in which a particular function cannot be used.

Reference

This symbol indicates a reference.

[ ]

Keys that appear on the machine's panel display.

Keys and buttons that appear on the computer's display.

【 】

Keys built into the machine's operation panel.

Keys on the computer's keyboard.

Configuring Macintosh

This section describes how to configure a Macintosh to use EtherTalk. The actual procedures to configure a Macintosh may differ depending on the version of the Mac OS. The following procedure describes how to configure Mac OS 8. If you are not using Mac OS 8, see the manual that comes with your version of the Mac OS for more information.

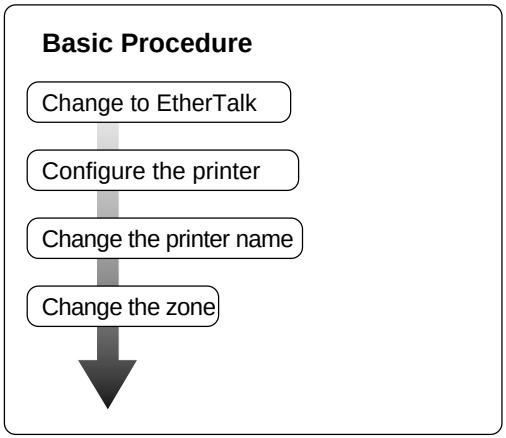

Limitation

- ❒ For use with Macintosh OS7.6 or later (excludes OS X).
- ❒ For use with a Macintosh, Power PC is required.

Note

- ❒ The PostScript 3 printer driver is stored in the following folder on the CD-ROM.

  `PS Driver:(language):Disk1`

Changing to EtherTalkChanging to EtherTalk

Follow the procedure to configure a Macintosh to use EtherTalk.

Reference

- For more information about installing the software required for EtherTalk, see the Macintosh manuals.

1. **Open [Control Panel], and then double-click the [AppleTalk] icon.**
2. **From the [Connect via:] pop-up menu, select "Ethernet".**
3. **If you change zones, select a name from the [Current zone:] pop-up menu.**
4. **Close the [AppleTalk] control panels.**
5. **Restart the computer.**

Configuring the Printer

Use the operation panel to activate the AppleTalk protocol. (The factory default is active.)

Reference

- For more information about the configuration, see the "*Configuring the Printer for the Network with the Operation Panel*" in Administrator Reference 1 that comes with this printer.

Changing the Printer Name

If the network has several same model printers, the names will be the same. Printers that have the same name will have their names changed slightly in the Chooser. For example, three printers named "printer" will appear in the chooser as "printer0", "printer1" and "printer2".

For more information about changing the printer name, see the PostScript 3 Supplement.

Changing the Zone

It may be necessary to change the zone configuration.

For more information about changing the printer name, see the PostScript 3 Supplement.

2. NetWare Configuration

This chapter describes how to set up a client computer when using a NetWare print server.

Note

- This section assumes that the client has NetWare client applications installed and is correctly configured to communicate with a NetWare print server. If not, install the necessary applications before starting the setting up procedure.

Windows 95/98/Me

Follow the procedure to set up a Windows 95/98/Me client.

After installing the printer driver, change the print port to NetWare queue.

Preparation

- Log on to the NetWare file server before starting the following procedure.

1 Install the printer driver you want to use as "Local Printer".

Reference

- For more information about installing the printer driver, see Printer Client Reference 1 that comes with this printer.

Note

- Any port can be selected during the installation, however, LPT1 is recommended.

Important

- Never have two versions of the same printer driver installed on your system at the same time. When upgrading to a new version of the printer driver, delete the old version, and then install the new one.

2 Click [Start], point to [Settings], and then click [Printers].

3 In the [Printers] window, click the icon of the printer you want to use.

On the **[File]** menu, click **[Properties]**.

4 Click the [Details] tab, and then click [Add Port].

5 Click [Network], and then click [Browse].

6 On the network tree, double-click the name of the file server.

The queues are displayed.

7 Click the queue you want to print, and then click [OK].

8 Click [OK].

In the **[Print to the following port]** box, a network path to the printer appears.

9 Click [OK] to close the Printer Properties, and again, open it.

10 Click the [Printer Settings] tab.

11 Click to clear the [Form Feed] and [Enable Banner] check boxes.

Note

- ❒ You should not check these boxes because they should be specified using the printer driver. If they are selected, the printer might not print correctly.

When using the PostScript 3 printer driver

Follow these steps to set up for the PostScript 3 printer driver.

❶ Click the [PostScript] tab.

❷ Click [Advanced].

❸ Click to clear the [Send CTRL+D before job] and [Send CTRL+D after job] check boxes.

12 Click [OK] to close the Printer Properties.

If a message is displayed during installation of the printer driver

When there is a driver in the computer that is newer than the one currently being installed, A message window is displayed.

In such a case, you cannot install with the Auto Run program. Use the driver that was used in installing the driver that is displayed in the message, and reinstall with **[Add Printer]**.

① Click **[Start]**, point to **[Settings]**, and then click **[Printers]**.

② Double-click the **[Add Printer]** icon.

③ Follow the wizard to install the driver.
If the printer driver disk is a CD-ROM, the sources of installation are as follows. If the installer starts up, click **[Cancel]** to quit it.

- PCL 5c
  DRIVERS\PCL5C\WIN9X_ME\(Language)\DISK1
- RPCS
  DRIVERS\RPCS\WIN9X_ME\(Language)\DISK1
- PostScript 3
  DRIVERS\PS\WIN9X_ME\(Language)\DISK1

Windows 2000

Preparation

❒ Log on to the NetWare file server before starting the following procedure. To use the NetWare server, select **[Typical]** installation.

1 Close all applications that are running.

2 Insert the CD-ROM into the CD-ROM drive.

The installer will start by Auto Run.

Important

❒ Never have two versions of the same printer driver installed on your system at the same time. When upgrading to a new version of the printer driver, delete the old version, and then install the new one.

Note

❒ Auto Run might not automatically work with certain OS settings. In this case, launch "INSTTOOL.EXE" located on the CD-ROM root directory.

3 Follow the instructions on the screen.

4 Select [Typical] installation, and then click [Next].

5 Follow the instructions on the screen.

6 Click [Add] when the "Select Port" dialog box appears.

7 Select [network printer], and then click [OK].

8 Double-click the computer name you want to use as a print server in the "Browse for Printer" window.

9 Select the printer you want to use, and then click [OK].

10 After confirming that the pass indicates the selected printer has been displayed, click [Next].

11 Follow the instructions on the screen.

12 Restart the computer after installation is complete.

Note

- ❒ If the **[Digital Signature Not Found]** dialog box appears, click **[Yes]** to continue the installation.

13 Click [Start] on the task bar, point to [Settings], and then click [Printers].

The **[Printers]** window is displayed.

14 Click to select the icon of the printer you want to use, and then click [Properties] on the [File] menu.

The printer driver's property is displayed.

Limitation

- ❒ Changing the printer settings requires Manage Printers permission. Members of the Administrators and Power Users groups have Manage Printers permission by default. When you set up options, log on using an account that has Manage Printers permission.

15 Click the [NetWare Settings] tab.

16 Click to clear the [Form feed] and [Enable banner] check boxes, and then click [OK].

When using the PostScript 3 printer driver

Follow these steps to set up for the PostScript 3 printer driver.

❶ Click the [PostScript] tab.

❷ Click [Advanced].

❸ Click to clear the [Send CTRL+D before job] and [Send CTRL+D after job] check boxes.

17 Click [OK] to close the [Printer properties] dialog box.

If a message is displayed during installation of the printer driver

When there is a driver in the computer that is newer than the one currently being installed, the warning dialog box appears.

In such a case, you cannot install with the Auto Run program. Use the driver that was used in installing the driver that is displayed in the message, and reinstall with **[Add Printer]**.

① Click **[Start]**, point to **[Settings]**, and then click **[Printers]**.

② Double-click the **[Add Printer]** icon.

③ Follow the wizard to install the driver.
If the printer driver disk is a CD-ROM, the sources of installation are as follows. If the installer starts up, click **[Cancel]** to quit it.

- PCL 5c
  DRIVERS\PCL5C\WIN2000\(Language)\DISK1
- RPCS
  DRIVERS\RPCS\WIN2000\(Language)\DISK1
- PostScript 3
  DRIVERS\PS\WIN2000\(Language)\DISK1

Windows NT 4.0

Preparation

❒ Log on to the NetWare file server before starting the following procedure. To use the NetWare server, select **[Typical]** installation.

1 Close all applications that are running.

2 Insert the CD-ROM into the CD-ROM drive.

The installer will start by Auto Run.

Important

❒ Never have two versions of the same printer driver installed on your system at the same time. When upgrading to a new version of the printer driver, delete the old version, and then install the new one.

Note

❒ Auto Run might not automatically work with certain OS settings. In this case, launch "INSTTOOL.EXE" located on the CD-ROM root directory.

3 Follow the instructions on the screen.

4 Select [Typical] installation, and then click [Next].

5 Follow the instructions on the screen.

6 Click [Add] when the "Select Port" dialog box appears.

7 Select [network printer], and then click [OK].

8 Double-click the computer name you want to use as a print server in the "Browse for Printer" window.

9 Select the printer you want to use, and then click [OK].

10 After confirming that the pass indicates the selected printer has been displayed, click [Next].

11 Follow the instructions on the screen.

12 Restart the computer after installation is complete.

13 Click [Start] on the task bar, point to [Settings], and then click [Printers].

The **[Printers]** window is displayed.

14 Click to select the icon of the printer you want to use, and then click [Properties] on the [File] menu.

The printer driver's property is displayed.

Limitation

- ❒ Changing the printer settings requires Manage Printers permission. Members of the Administrators and Power Users groups have Manage Printers permission by default. When you set up options, log on using an account that has Manage Printers permission.

15 Click the [NetWare Settings] tab.

16 Click to clear the [Form feed] and [Enable banner] check boxes, and then click [OK].

When using the PostScript 3 printer driver

Follow these steps to set up for the PostScript 3 printer driver.

❶ Click the [PostScript] tab.

❷ Click [Advanced].

❸ Click to clear the [Send CTRL+D before job] and [Send CTRL+D after job] check boxes.

17 Click [OK] to close the [Printer properties] dialog box.

If a message is displayed during installation of the printer driver

When there is a driver in the computer that is newer than the one currently being installed, the warning dialog box appears.

In such a case, you cannot install with the Auto Run program. Use the driver that was used in installing the driver that is displayed in the message, and reinstall with **[Add Printer]**.

① Click **[Start]**, point to **[Settings]**, and then click **[Printers]**.

② Double-click the **[Add Printer]** icon.

③ Follow the wizard to install the driver.
If the printer driver disk is a CD-ROM, the sources of installation are as follows. If the installer starts up, click **[Cancel]** to quit it.

- PCL 5c
  DRIVERS\PCL5C\NT4\(Language)\DISK1
- RPCS
  DRIVERS\RPCS\NT4\(Language)\DISK1
- PostScript 3
  DRIVERS\PS\NT4\(Language)\DISK1

Software and Utilities Included on the CD-ROM

There are two CD-ROMs that comes with this printer. One is labeled "Operating Instructions" and the other is "Printer Drivers and Utilities". The following items are included on the two CD-ROMs separately.

❖ Agfa Font Manager

Helps you to install new screen fonts, or organize and manage fonts already installed on the system. This manual is provided as a PDF file on the CD-ROM labeled "Printer Drivers and Utilities".

❖ SmartNetMonitor for Admin

A utility for the system administrator to manage printers on the network.

Reference

- ❒ For more information about SmartNetMonitor for Admin, see the SmartNetMonitor for Admin Help file.

❖ SmartNetMonitor for Client

A utility for users to manage their own print status on the network.

Reference

- ❒ For more information about SmartNetMonitor for Client , see the SmartNetMonitor for Client Help file .

Printer Drivers for This Printer

Printing requires installation of a printer driver for your operating system. The following drivers are included on the CD-ROM that comes with this printer.

Printer Language / Operating system	PCL 5c	RPCS	PostScript 3
Windows 95 *1	√	√	√ *8
Windows 98 *2	√	√	√ *8
Windows Me *3	√	√	√ *8
Windows 2000 *4	√	√	√ *8
Windows NT 4.0 *5	√	√	√ *7 *8
Mac OS *6			√ *8

*1 Microsoft Windows 95 operating system
*2 Microsoft Windows 98 operating system
*3 Microsoft Windows Me operating system
*4 Microsoft Windows 2000 professional
Microsoft Windows 2000 Server
*5 Microsoft Windows NT Server operating system version 4.0, Microsoft Windows NT Workstation operating system version 4.0 in a computer using x86 processors.
*6 Required version is 7.6.1 or later operating system.
*7 Requires Service Pack 5 or later.
*8 The Adobe PostScript printer drivers and PostScript Printer Description (PPD) files are included on the CD-ROM labeled "Printer Drivers and Utilities".

❖ PCL 5c printer driver

This printer driver allows the computer to communicate with the printer via a printer language.

⇒ P.28 *"Windows 95/98/Me - Accessing the Printer Properties"*
⇒ P.30 *"Windows 2000 - Accessing the Printer Properties"*
⇒ P.33 *"Windows NT 4.0 - Accessing the Printer Properties"*

❖ RPCS printer driver

This printer driver allows the computer to communicate with the printer via a printer language. The preset type user interface is provided in addition to the conventional one.

⇒ P.36 *"Windows 95/98/Me - Accessing the Printer Properties"*
⇒ P.38 *"Windows 2000 - Accessing the Printer Properties"*
⇒ P.41 *"Windows NT 4.0 - Accessing the Printer Properties"*

❖ Adobe PostScript Printer Drivers and PPD files

The Adobe Postscript printer drivers and the PPD files are included on the CD-ROM that comes with this printer. Adobe PostScript printer driver allows the computer to communicate with the printer via a printer language. The PPD files allow the printer driver to enable the printer specific functions.

⇒ P.44 *"Windows 95/98/Me - Accessing the Printer Properties"*
⇒ P.46 *"Windows 2000 - Accessing the Printer Properties"*
⇒ P.49 *"Windows NT 4.0 - Accessing the Printer Properties"*
⇒ P.52 *"Macintosh - Setting up for Printing"*

SmartNetMonitor for Admin

SmartNetMonitor for Admin is software that uses the TCP/IP and IPX/SPX protocols to monitor the printers in a network. It can monitor multiple network printers having IP/IPX addresses. We recommend network administrators to use this software.

❖ File Path

SmartNetMonitor for Admin is stored in the following folder on the CD-ROM

NETWORK\NETMON\ADMIN\DISK1

OS	Protocol Stack
Microsoft Windows 95/98/Me	TCP/IP provided with Windows 95/98/Me IPX/SPX provided with Windows 95/98/Me NetWare network client provided with Windows 95/98 Novell Client for Windows 95/98
Microsoft Windows 2000	TCP/IP provided with Windows 2000 IPX/SPX provided with Windows 2000 NetWare Client provided with Windows 2000 Novell Client for Windows NT/2000
Microsoft Windows NT4.0	TCP/IP provided with Windows NT IPX/SPX provided with Windows NT Client Service for NetWare provided with Windows NT Novell Client for Windows NT/2000

❖ What can it do?

SmartNetMonitor for Admin is equipped with the following functions.

- Limits the settings to be done from the operation panel, and disables changes to be made to some of the items.
- Enables the selection of paper type loaded in the printer.
- Switches to the Energy Saver mode, and wake up from the Energy Saver mode.
- Checks the information on printing, paper exhaustion, and such, on the computer.
- Monitors multiple printers at the same time. When there are many printers, you can create groups and classify the printers to facilitate management.
- Checks the printer's network settings and detailed information of devices.
- Enables you to change the printer's network settings.
- Checks per print jobs the number of pages printed with the printer.
- Checks the results of print jobs executed from the computer.
- Checks the number of pages printed for each computer, using the user codes.

Note

❒ Using this function requires the User Account Enhance Unit Type B.

Reference

❒ See the SmartNetMonitor for Admin Help file for more information about using SmartNetMonitor for Admin.

SmartNetMonitor for Client

SmartNetMonitor for Client is software equipped with the following functions. We recommend all users of this printer to install this software.

- Provides the function to print in a Peer-to-Peer network, using the TCP/IP protocol, NetBEUI, and IPP from Windows 95/98/Me, Windows 2000, and Windows NT 4.0.
- Uses the TCP/IP and IPX/SPX protocols to monitor the status of devices in a network constantly.

❖ File Path

SmartNetMonitor for Client is stored in the following folder on the CD-ROM

NETWORK\NETMON\CLIENT\DISK1

OS	Protocol Stack
Microsoft Windows 95/98/Me	TCP/IP provided with Windows 95/98/Me IPX/SPX provided with Windows 95/98/Me NetBEUI provided with Windows 95/98/Me NetWare network client provided with Windows 95/98 Novell Client for Windows 95/98
Microsoft Windows 2000	TCP/IP provided with Windows 2000 IPX/SPX provided with Windows 2000 NetBEUI provided with Windows 2000 NetWare Client provided with Windows 2000 Novell Client for Windows NT/2000
Microsoft Windows NT4.0	TCP/IP provided with Windows NT IPX/SPX provided with Windows NT NetBEUI provided with Windows NT Client Service for NetWare provided with Windows NT Novell Client for Windows NT/2000

❖ What can it do?

SmartNetMonitor for Client is equipped with the following functions.

- Peer-to-Peer print function
  - Prints directly on the network printer without a print server.
  - Prints on a substitute printer when there are too many jobs accumulated in the specified printer, or when an error disables printing (Recovery printing).
  - Allocates multiple printings to multiple printers (Parallel Printing).
  - Prior group registration of printers specified for Recovery/Parallel Printing.
- Checks the information on printing, paper exhaustion, and such, on the computer.
- Simultaneously monitors multiple printers in use.
- Checks the printer's network settings and detailed information of devices.
- Enables you to check the log of print jobs using the User ID.
- An error message warns when there is an error on the specified printer during transfer or printing of data.
- Equipment monitoring function
  - Checks the equipment information on printing, paper exhaustion, and such, on the computer.
  - Simultaneously monitors multiple printers in use.
  - Checks the printer's network settings and detailed information of devices.
  - Enables you to check the log of print jobs using the user ID.
- A window opens to notify the completion of printing. You can also select to be notified of the print condition, such as displaying the notice only when Recovery Printing is executed.

Limitation

- ❒ Make similar settings for the option configuration of the printer for Recovery/Parallel Printing and the printer for giving print commands. If the required options necessary for printing, such as the Paper Feed Unit, are not installed on the substitute printer, that function is disabled.
- ❒ Load paper of the same size on both the printer for Recovery/Parallel Printing and the printer for giving print commands. When specifying a particular Paper Tray for printing, load paper of the same size into that tray.
- ❒ If the type and devices of the printer for Recovery/Parallel Printing and the printer for giving commands are different, the print results might not turn out identical.
- ❒ If you select Sample Print or Locked Print, you cannot execute Recovery/Parallel Printing.

Reference

- ❒ See the SmartNetMonitor for Client Help file for more information about using SmartNetMonitor for Client.

PCL 5c - Accessing the Printer Properties

Windows 95/98/Me - Accessing the Printer Properties

There are two methods you can use to open the **[Printer Properties]** dialog box.

Making default printer settings

To make the default printer settings, first open the **[Printer Properties]** dialog box from the **[Printers]** window.

Note

- With some applications, the printer driver's settings are not used, and the application's own default settings are applied.

1 Click [Start] on the taskbar, point to [Settings], and then click [Printers].

The **[Printers]** window appears.

2 Click to select the icon of the printer you want to use.

3 On the [File] menu, click [Properties].

4 Make the necessary settings, and then click [OK].

If a message is displayed during installation of the printer driver

When there is a driver in the computer that is newer than the one currently being installed, the warning dialog box appears.

In such a case, you cannot install with the Auto Run program. Use the driver that was used in installing the driver that is displayed in the message, and reinstall with **[Add Printer]**.

① Click **[Start]**, point to **[Settings]**, and then click **[Printers]**.

② Double-click the **[Add Printer]** icon.

③ Follow the wizard to install the driver.
If the printer driver disk is a CD-ROM, the sources of installation are as follows. If the installer starts up, click **[Cancel]** to quit it.

- PCL 5c
  DRIVERS\PCL5C\WIN9X_ME\(Language)\DISK1

Making printer settings from an application

To make the printer settings for a specific application, open the **[Printer Properties]** dialog box from that application. The following example describes how to make settings for the WordPad application that comes with Windows 95/98/Me.

Note

❒ The actual procedure you should follow to open the **[Printer Properties]** dialog box may differ depending on the application. For more information, see the documentation that comes with the application you are using.

❒ With some applications, the printer driver's settings are not used, and the application's own default settings are applied.

❒ Any settings you make in the following procedure are valid for the current application only.

1. **On the [File] menu, click [Print].**
   The **[Print]** dialog box appears.
2. **Select the printer you want to use in the [Name] list box, and then click [Properties].**
   The **[Printer Properties]** dialog box appears.
3. **Make the necessary settings, and then click [OK].**
4. **Click [OK] to start printing.**

Windows 2000 - Accessing the Printer Properties

Making printer default settings - Printer Properties

Limitation

- ❒ Changing the printer settings requires Manage Printers permission. Members of the Administrators and Power Users groups have Manage Printers permission by default. When you set up options, log on using an account that has Manage Printers permission.

1. **Click [Start] on the taskbar, point to [Settings], and then click [Printers].**
   The **[Printers]** window appears.
2. **Click to select the icon of the printer you want to use.**
3. **On the [File] menu, click [Properties].**
   The **[Printer Properties]** appears.

4 **Make the necessary settings, and then click [OK].**

Note

- ❒ Settings you make here are used as the default settings for all applications.
- ❒ If the **[Digital Signature Not Found]** dialog box appears, click **[Yes]** to continue the installation.

If a message is displayed during installation of the printer driver

When there is a driver in the computer that is newer than the one currently being installed, the warning dialog box appears.

In such a case, you cannot install with the Auto Run program. Use the driver that was used in installing the driver that is displayed in the message, and reinstall with **[Add Printer]**.

① Click **[Start]**, point to **[Settings]**, and then click **[Printers]**.

② Double-click the **[Add Printer]** icon.

③ Follow the wizard to install the driver.
If the printer driver disk is a CD-ROM, the sources of installation are as follows. If the installer starts up, click **[Cancel]** to quit it.

- PCL 5c
  DRIVERS\PCL5C\WIN2000\(Language)\DISK1

Making printer default settings - Printing Preferences Properties

Limitation

- ❒ Changing the printer settings requires Manage Printers permission. Members of the Administrators and Power Users groups have Manage Printers permission by default. When you set up options, log on using an account that has Manage Printers permission.

1 Click [Start] on the taskbar, point to [Settings], and then click [Printers].

The **[Printers]** window appears.

2 Click to select the icon of the printer you want to use.

3 On the [File] menu, click [Printing Preferences...].

The Printing Preferences Properties appears.

4 Make the necessary settings, and then click [OK].

Note

- ❒ Settings you make here are used as the default settings for all applications.

Making printer settings from an application

To make the printer settings for a specific application, open the Printing Preferences Properties from that application. The following example describes how to make settings for the WordPad application that comes with Windows 2000.

Note

- ❒ The actual procedures you should follow to open the Printing Preferences Properties may differ depending on the application. For more information, see the documentation that comes with the application you are using.
- ❒ Any settings you make in the following procedure are valid for the current application only.

1 **On the [File] menu, click [Print...].**

The **[Print]** dialog box appears.

2 **Select the printer you want to use in the [Select Printer] box.**

3 **Make the necessary settings, and then click [Apply] to start your printing.**

Windows NT 4.0 - Accessing the Printer Properties

Making default printer settings - Printer Properties

Limitation

❒ Changing the printer settings requires Full Control access permission. Members of Administrators, Server Operators, Print Operators, and Power Users groups have Full Control permission by default. When you set up options, log on using an account that has Full Control permission.

1 **Click [Start] on the taskbar, point to [Settings], and then click [Printers].**

The **[Printers]** window appears.

2 **Click to select the icon of the printer you want to use.**

3 **On the [File] menu, click [Properties].**

The **[Printer Properties]** dialog box appears.

4 **Make the necessary settings, and then click [OK].**

Note

❒ Settings you make here are used as the default settings for all applications.

If a message is displayed during installation of the printer driver

When there is a driver in the computer that is newer than the one currently being installed, the warning dialog box appears.

In such a case, you cannot install with the Auto Run program. Use the driver that was used in installing the driver that is displayed in the message, and reinstall with **[Add Printer]**.

① Click **[Start]**, point to **[Settings]**, and then click **[Printers]**.

② Double-click the **[Add Printer]** icon.

③ Follow the wizard to install the driver.
If the printer driver disk is a CD-ROM, the sources of installation are as follows. If the installer starts up, click **[Cancel]** to quit it.

- PCL 5c
  `DRIVERS\PCL5C\NT4\(Language)\DISK1`

Making default printer settings - Default Document Properties

Limitation

❒ Changing the printer settings requires Full Control access permission. Members of the Administrators, Server Operators, Print Operators, and Power Users groups have Full Control permission by default. When you set up options, log on using an account that has Full Control permission.

1 Click [Start] on the taskbar, point to [Settings], and then click [Printers].

The **[Printers]** window appears.

2 Click to select the icon of the printer you want to use.

3 On the [File] menu, click [Document Defaults].

The Default Document Properties appears.

4 Make the necessary settings, and then click [OK].

Note

- ❒ Settings you make here are used as the default settings for all applications.

Making printer settings from an application

To make the printer settings for a specific application, open the **[Printer Properties]** dialog box from that application. The following example describes how to make settings for the WordPad application that comes with Windows NT 4.0.

Note

- ❒ The actual procedure you should follow to open the **[Printer Properties]** dialog box may differ depending on the application. For more information, see the documentation that comes with the application you are using.
- ❒ With some applications, the printer driver settings are not used, and the application's own default settings are applied.
- ❒ Any settings you make in the following procedure are valid for the current application only.

1 On the [File] menu, click [Print].

The **[Print]** dialog box appears.

2 Select the printer you want to use in the [Name] list box, and then click [Properties].

The **[Printer Properties]** dialog box appears.

3 Make the necessary settings, and then click [OK].

4 Click [OK] to start printing.

RPCS - Accessing the Printer Properties

Windows 95/98/Me - Accessing the Printer Properties

There are two methods you can use to open the **[Printer Properties]** dialog box.

Making default printer settings

To make the default printer settings, first open the **[Printer Properties]** dialog box from the **[Printers]** window.

Note

- ❒ With some applications, the printer driver settings are not used, and the application's own default settings are applied.

1. **Click [Start] on the taskbar, point to [Settings], and then click [Printers].**

   The **[Printers]** window appears.

2. **Click to select the icon of the printer you want to use.**

3. **On the [File] menu, click [Properties].**

4. **Make the necessary settings, and then click [OK].**

If a message is displayed during installation of the printer driver

When there is a driver in the computer that is newer than the one currently being installed, the warning dialog box appears.

In such a case, you cannot install with the Auto Run program. Use the driver that was used in installing the driver that is displayed in the message, and reinstall with **[Add Printer]**.

① Click **[Start]**, point to **[Settings]**, and then click **[Printers]**.

② Double-click the **[Add Printer]** icon.

③ Follow the wizard to install the driver.
If the printer driver disk is a CD-ROM, the sources of installation are as follows. If the installer starts up, click **[Cancel]** to quit it.

- RPCS
  `DRIVERS\RPCS\WIN9X_ME\(Language)\DISK1`

Making printer settings from an application

To make the printer settings for a specific application, open the **[Printer Properties]** dialog box from that application. The following example describes how to make settings for the WordPad application that comes with Windows 95/98/Me.

Note

❒ The actual procedure you should follow to open the **[Printer Properties]** dialog box may differ depending on the application. For more information, see the documentation that comes with the application you are using.

❒ With some applications, the printer driver settings are not used, and the application's own default settings are applied.

❒ Any settings you make in the following procedure are valid for the current application only.

1. **On the [File] menu, click [Print].**
   The **[Print]** dialog box appears.
2. **Select the printer you want to use in the [Name] list box, and then click [Properties].**
   The **[Printer Properties]** dialog box appears.
3. **Make the necessary settings, and then click [OK].**
4. **Click [OK] to start printing.**

Windows 2000 - Accessing the Printer Properties

Making printer default settings - Printer Properties

Limitation

- ❒ Changing the printer settings requires Manage Printers permission. Members of the Administrators and Power Users groups have Manage Printers permission by default. When you set up options, log on using an account that has Manage Printers permission.

1. **Click [Start] on the taskbar, point to [Settings], and then click [Printers].**
   The **[Printers]** window appears.
2. **Click to select the icon of the printer you want to use.**
3. **On the [File] menu, click [Properties].**
   The Printer Properties appears.

4 Make the necessary settings, and then click [OK].

Note

- ❒ Settings you make here are used as the default settings for all applications.
- ❒ If the **[Digital Signature Not Found]** dialog box appears, click **[Yes]** to continue the installation.

If a message is displayed during installation of the printer driver

When there is a driver in the computer that is newer than the one currently being installed, the warning dialog box appears.

In such a case, you cannot install with the Auto Run program. Use the driver that was used in installing the driver that is displayed in the message, and reinstall with **[Add Printer]**.

① Click **[Start]**, point to **[Settings]**, and then click **[Printers]**.

② Double-click the **[Add Printer]** icon.

③ Follow the wizard to install the driver.
If the printer driver disk is a CD-ROM, the sources of installation are as follows. If the installer starts up, click **[Cancel]** to quit it.

- RPCS
  DRIVERS\RPCS\WIN2000\(Language)\DISK1

Making printer default settings - Printing Preferences Properties

Limitation

- ❒ Changing the printer settings requires Manage Printers permission. Members of the Administrators and Power Users groups have Manage Printers permission by default. When you set up options, log on using an account that has Manage Printers permission.

1 Click [Start] on the taskbar, point to [Settings], and then click [Printers].

The **[Printers]** window appears.

2 Click to select the icon of the printer you want to use.

3 On the [File] menu, click [Printing Preferences...].

The Printing Preferences Properties appears.

4 Make the necessary settings, and then click [OK].

Note

- ❒ Settings you make here are used as the default settings for all applications.

Making printer settings from an application

To make the printer settings for a specific application, open the Printing Preferences Properties from that application. The following example describes how to make settings for the WordPad application that comes with Windows 2000.

Note

- ❒ The actual procedures you should follow to open the Printing Preferences Properties may differ depending on the application. For more information, see the documentation that comes with the application you are using.
- ❒ Any settings you make in the following procedure are valid for the current application only.

1. **On the [File] menu, click [Print...].**

   The **[Print]** dialog box appears.

2. **Select the printer you want to use in the [Select Printer] box.**

3. **Make the necessary settings, and then click [Apply] to start your printing..**

Windows NT 4.0 - Accessing the Printer Properties

Making default printer settings - Printer Properties

Limitation

- ❒ Changing the printer settings requires Full Control access permission. Members of Administrators, Server Operators, Print Operators, and Power Users groups have Full Control permission by default. When you set up options, log on using an account that has Full Control permission.

1. **Click [Start] on the taskbar, point to [Settings], and then click [Printers].**

   The **[Printers]** window appears.

2. **Click to select the icon of the printer you want to use.**

3. **On the [File] menu, click [Properties].**

   The **[Printer Properties]** dialog box appears.

4. **Make the necessary settings, and then click [OK].**

   Note

   - ❒ Settings you make here are used as the default settings for all applications.

If a message is displayed during installation of the printer driver

When there is a driver in the computer that is newer than the one currently being installed, the warning dialog box appears.

In such a case, you cannot install with the Auto Run program. Use the driver that was used in installing the driver that is displayed in the message, and reinstall with **[Add Printer]**.

① Click **[Start]**, point to **[Settings]**, and then click **[Printers]**.

② Double-click the **[Add Printer]** icon.

③ Follow the wizard to install the driver.
If the printer driver disk is a CD-ROM, the sources of installation are as follows. If the installer starts up, click **[Cancel]** to quit it.

- RPCS
  DRIVERS\RPCS\NT4\(Language)\DISK1

Making default printer settings - Default Document Properties

Limitation

❒ Changing the printer settings requires Full Control access permission. Members of the Administrators, Server Operators, Print Operators, and Power Users groups have Full Control permission by default. When you set up options, log on using an account that has Full Control permission.

1 Click [Start] on the taskbar, point to [Settings], and then click [Printers].

The **[Printers]** window appears.

2 Click to select the icon of the printer you want to use.

3 On the [File] menu, click [Document Defaults...].

The Default Document Properties appears.

4 Make the necessary settings, and then click [OK].

Note

- ❒ Settings you make here are used as the default settings for all applications.

Making printer settings from an application

To make the printer settings for a specific application, open the **[Printer Properties]** dialog box from that application. The following example describes how to make settings for the WordPad application that comes with Windows NT 4.0.

Note

- ❒ The actual procedure you should follow to open the **[Printer Properties]** dialog box may differ depending on the application. For more information, see the documentation that comes with the application you are using.
- ❒ With some applications, the printer driver settings are not used, and the application's own default settings are applied.
- ❒ Any settings you make in the following procedure are valid for the current application only.

1 On the [File] menu, click [Print].

The **[Print]** dialog box appears.

2 Select the printer you want to use in the [Name] list box, and then click [Properties].

The **[Printer Properties]** dialog box appears.

3 Make the necessary settings, and then click [Apply].

4 Click [OK] to start printing.

PostScript 3 - Setting up for Printing

Windows 95/98/Me - Accessing the Printer Properties

There are two methods you can use to open the **[Printer Properties]** dialog box.

Making default printer settings

To make the printer default settings, first open the **[Printer Properties]** dialog box from the **[Printers]** window.

Note

- ❒ With some applications, the printer driver settings are not used, and the application's own default settings are applied.

1. **Click [Start] on the taskbar, point to [Settings], and then click [Printers].**

   The **[Printers]** window appears.

2. **Click to select the icon of the printer you want to use.**

3. **On the [File] menu, click [Properties].**

   The **[Printer Properties]** dialog box appears.

4. **Make the necessary settings, and then click [OK].**

5. **Click [OK].**

If a message is displayed during installation of the printer driver

When there is a driver in the computer that is newer than the one currently being installed, the warning dialog box appears.

In such a case, you cannot install with the Auto Run program. Use the driver that was used in installing the driver that is displayed in the message, and reinstall with **[Add Printer]**.

① Click **[Start]**, point to **[Settings]**, and then click **[Printers]**.

② Double-click the **[Add Printer]** icon.

③ Follow the wizard to install the driver.
If the printer driver disk is a CD-ROM, the sources of installation are as follows. If the installer starts up, click **[Cancel]** to quit it.

- PostScript 3
  DRIVERS\PS\WIN9X_ME\(Language)\DISK1

Making printer settings from an application

To make the printer settings for a specific application, open the **[Printer Properties]** dialog box from that application. The following example describes how to make settings for the WordPad application that comes with Windows 95/98/Me.

Note

❒ The actual procedure you should follow to open the **[Printer Properties]** dialog box may differ depending on the application. For more information, see the documentation that comes with the application you are using.

❒ With some applications, the printer driver settings are not used, and the application's own default settings are applied.

❒ Any settings you make in the following procedure are valid for the current application only.

1. **On the [File] menu, click [Print].**
   The **[Print]** dialog box appears.
2. **Select the printer you want to use in the [Name] list box, and then click [Properties].**
   The **[Printer Properties]** dialog box appears.
3. **Make the necessary settings, and then click [OK].**
4. **Click [OK] to start printing.**

Windows 2000 - Accessing the Printer Properties

Making printer default settings - Printer Properties

Limitation

- ❒ Changing the printer settings requires Manage Printers permission. Members of the Administrators and Power Users groups have Manage Printers permission by default. When you set up options, log on using an account that has Manage Printers permission.

1. **Click [Start] on the taskbar, point to [Settings], and then click [Printers].**
   The **[Printers]** window appears.
2. **Click to select the icon of the printer you want to use.**
3. **On the [File] menu, click [Properties].**
   The Printer Properties appears.

4 Make the necessary settings, and then click [OK].

Note

- ❒ Settings you make here are used as the default settings for all applications.
- ❒ If the **[Digital Signature Not Found]** dialog box appears, click **[Yes]** to continue the installation.

If a message is displayed during installation of the printer driver

When there is a driver in the computer that is newer than the one currently being installed, the warning dialog box appears.

In such a case, you cannot install with the Auto Run program. Use the driver that was used in installing the driver that is displayed in the message, and reinstall with **[Add Printer]**.

① Click **[Start]**, point to **[Settings]**, and then click **[Printers]**.

② Double-click the **[Add Printer]** icon.

③ Follow the wizard to install the driver.
If the printer driver disk is a CD-ROM, the sources of installation are as follows. If the installer starts up, click **[Cancel]** to quit it.

- PostScript 3
  DRIVERS\PS\WIN2000\(Language)\DISK1

Making printer default settings - Printing Preferences Properties

Limitation

- ❒ Changing the printer settings requires Manage Printers permission. Members of the Administrators and Power Users groups have Manage Printers permission by default. When you set up options, log on using an account that has Manage Printers permission.

1 **Click [Start] on the taskbar, point to [Settings], and then click [Printers].**

The **[Printers]** window appears.

2 **Click to select the icon of the printer you want to use.**

3 **On the [File] menu, click [Printing Preferences...].**

The Printing Preferences Properties appears.

4 **Make the necessary settings, and then click [OK].**

Note

- ❒ Settings you make here are used as the default settings for all applications.

Making printer settings from an application

To make the printer settings for a specific application, open the Printing Preferences Properties from that application. The following example describes how to make settings for the WordPad application that comes with Windows 2000.

Note

- ❒ The actual procedures you should follow to open the Printing Preferences Properties may differ depending on the application. For more information, see the documentation that comes with the application you are using.
- ❒ Any settings you make in the following procedure are valid for the current application only.

1. **On the [File] menu, click [Print...].**
   The **[Print]** dialog box appears.
2. **Select the printer you want to use in the [Select Printer] box.**
3. **Make the necessary settings, and then click [Print] to start your printing.**
4. **Click [OK] to start your printing.**

Windows NT 4.0 - Accessing the Printer Properties

Making default printer settings - Printer Properties

Limitation

- ❒ Changing the printer settings requires Full Control access permission. Members of Administrators, Server Operators, Print Operators, and Power Users groups have Full Control permission by default. When you set up options, log on using an account that has Full Control permission.

1. **Click [Start] on the taskbar, point to [Settings], and then click [Printers].**
   The **[Printers]** window appears .
2. **Click to select the icon of the printer you want to use.**
3. **On the [File] menu, click [Properties].**
   The **[Printer Properties]** dialog box appears.
4. **Make the necessary settings, and then click [OK].**

Note

- ❒ Settings you make here are used as the default settings for all applications.

If a message is displayed during installation of the printer driver

When there is a driver in the computer that is newer than the one currently being installed, the warning dialog box appears.

In such a case, you cannot install with the Auto Run program. Use the driver that was used in installing the driver that is displayed in the message, and reinstall with **[Add Printer]**.

① Click **[Start]**, point to **[Settings]**, and then click **[Printers]**.

② Double-click the **[Add Printer]** icon.

③ Follow the wizard to install the driver.
If the printer driver disk is a CD-ROM, the sources of installation are as follows. If the installer starts up, click **[Cancel]** to quit it.

- PostScript 3
  `DRIVERS\PS\NT4\(Language)\DISK1`

Making default printer settings - Default Document Properties

Limitation

❒ Changing the printer settings requires Full Control access permission. Members of the Administrators, Server Operators, Print Operators, and Power Users groups have Full Control permission by default. When you set up options, log on using an account that has Full Control permission.

1 Click [Start] on the taskbar, point to [Settings], and then click [Printers].

The **[Printers]** window appears.

2 Click to select the icon of the printer you want to use.

3 On the [File] menu, click [Document Defaults].

The Default Document Properties appears.

4 Make the necessary settings, and then click [OK].

Note

- ❒ Settings you make here are used as the default settings for all applications.

Making printer settings from an application

To make the printer settings for a specific application, open the **[Printer Properties]** dialog box from that application. The following example describes how to make settings for the WordPad application that comes with Windows NT 4.0.

Note

- ❒ The actual procedure you should follow to open the **[Printer Properties]** dialog box may differ depending on the application. For more information, see the documentation that comes with the application you are using.
- ❒ With some applications, the printer driver settings are not used, and the application's own default settings are applied.
- ❒ Any settings you make in the following procedure are valid for the current application only.

1 On the [File] menu, click [Print].

The **[Print]** dialog box appears.

2 Select the printer you want to use in the [Name] list box, and then click [Properties].

The **[Printer Properties]** dialog box appears.

3 Make the necessary settings, and then click [OK].

4 Click [OK] to start printing.

Macintosh - Setting up for Printing

Making paper settings from an application

1 Open the file you want to print.

2 On the [File] menu, click [Page Setup].

The **[Adobe PS]** dialog box appears.

3 Confirm that the printer you want to use is shown in [Format for:], and then use [Paper] to select the paper size you want to use.

Note

- ❒ If the printer is now shown in the **[Format for:]** box, use the pop-up menu to display a list of available printers.

Reference

- ❒ The actual appearance of the **[Page Setup]** dialog box depends on the application you are using. See the documentation that comes with the Macintosh for more information.

4 After configuring the settings, click [OK].

Setting up for printing from an application

1. **Open the file you want to print.**
2. **On the [File] menu, click [Print].**
   The **[Printer]** dialog box appears.
3. **Confirm that the printer is selected in the [Printer] box, and then make the printer settings.**
4. **After configuring the settings, click [Print].**

Canceling a Print Job

Windows 95/98/Me - Canceling a Print Job

1 Double-click the printer icon on the Windows taskbar.

A window appears, showing all the print jobs that are currently queuing to be printed. Check the current status of the job you want to cancel.

2 Select the name of the job you want to cancel.

3 In the [Document] menu, click [Cancel Printing].

Note

- ❒ You can also open the print job queue window by double-clicking the printer icon in the **[Printer]** window.

4 Press 【Job Reset】.

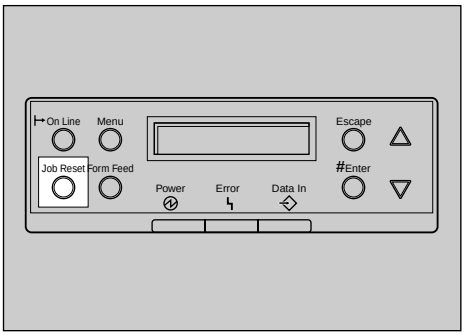

ZDJS023N

A message appears on the operation panel display indicating that the print job is being cancelled.

Important

- The procedure above cancels the print job that is currently being processed by the printer. In some cases, the printer may already be processing data for the next print job following the one currently being output. In this case, the next print job is also canceled when you press 【**Job Reset**】.
- When the printer is being shared by multiple computers, be careful not to accidentally cancel someone else's print job.

Note

- You cannot stop printing data that has already been processed internally by the printer. Because of this, printing may continue for a few pages after you press 【**Job Reset**】.
- A print job that contains a large volume of data may take considerable time to stop.

Windows 2000 - Canceling a Print Job

1 Double-click the printer icon on the taskbar.

A window appears, showing all the print jobs that are currently queuing to be printed. Check the current status of the job you want to cancel.

2 Select the name of the job you want to cancel.

3 On the [Document] menu, click [Cancel Printing].

Note

- You can also open the print job queue window by double-clicking the printer icon in the **[Printers]** window.

4 **Press 【Job Reset】 on the operation panel.**

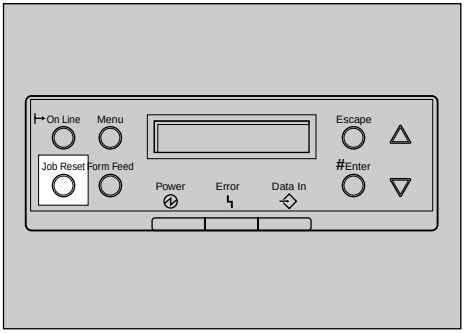

ZDJS023N

A message appears on the panel display indicating that the print job is being canceled.

Important

- ❒ When the printer is being shared by multiple computers, be careful not to accidentally cancel someone else's print job.

Note

- ❒ You cannot stop printing data that has already been processed internally by the printer. Because of this, printing might continue for a few pages after you press **[Job Reset]**.
- ❒ A print job that contains a large volume of data might take considerable time to stop.

Windows NT 4.0 - Canceling a Print Job

1 Double-click the printer icon on the Windows taskbar.

A window appears, showing all the print jobs that are currently queuing to be printed. Check the current status of the job you want to cancel.

2 Select the name of the job you want to cancel.

3 In the [Document] menu, click [Cancel Printing].

Note

- ❒ You can also open the print job queue window by double-clicking the printer icon in the **[Printer]** window.

4 Press 【Job Reset】.

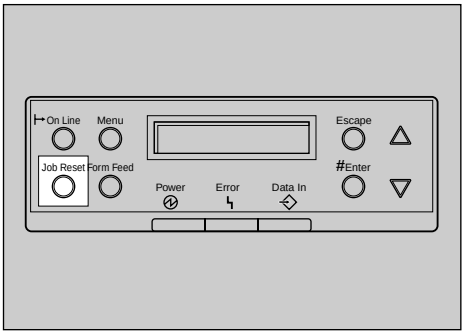

ZDJS023N

A message appears on the operation panel display indicating that the print job is being cancelled.

Important

- The procedure above cancels the print job that is currently being processed by the printer. In some cases, the printer may already be processing data for the next print job following the one currently being output. In this case, the next print job is also canceled when you press 【**Job Reset**】.
- When the printer is being shared by multiple computers, be careful not to accidentally cancel someone else's print job.

Note

- You cannot stop printing data that has already been processed internally by the printer. Because of this, printing may continue for a few pages after you press 【**Job Reset**】.
- A print job that contains a large volume of data may take considerable time to stop.

Uninstalling the PCL 5c Printer Driver

This section describes how to uninstall the printer driver. The actual procedure may differ depending on the operating system.

Follow one of the appropriate procedures below.

Windows 95/98 - Uninstalling the PCL 5c Printer Driver

1. **Close all the applications that are currently running.**
2. **Click [Start] on the taskbar, point to [Settings], and click [Printers].**

   The **[Printers]** window appears.
3. **Click to select the icon of the printer you want to remove.**
4. **On the [File] menu, click [Delete].**

   A confirmation dialog box appears.
5. **Click [Yes] to uninstall the printer driver.**

Windows 2000 - Uninstalling the PCL 5c Printer Driver

Limitation

- Uninstalling a printer driver requires Manage Printers permission. Members of the Administrators and Power Users groups have Manage Printers permission by default. When you uninstall a printer driver, log on using an account that has Manage Printers permission.

1 Close all the applications that are currently running.

2 Click [Start] on the taskbar, point to [Settings], and click [Printers].

The **[Printers]** window appears.

3 Click to select the icon of the printer you want to remove.

4 On the [File] menu, click [Delete].

A confirmation dialog box appears.

5 Click [Yes] to uninstall the printer driver.

Windows NT 4.0 - Uninstalling the PCL 5c Printer Driver

Limitation

- Uninstalling a printer driver requires Full Control access permission. Members of the Administrators, Server Operators, Print Operators, and Power Users groups have Full Control Permission by default. When you install a printer driver, log on using an account that has Full Control permission.

1 Close all applications that are currently running.

2 Click [Start] on the taskbar, point to [Settings], and click [Printers].

The **[Printers]** window appears.

3 Click to select the icon of the printer you want to remove.

4 On the [File] menu, click [Delete].

A confirmation dialog box appears.

5 Click [Yes] to uninstall the printer driver.

Uninstalling the RPCS Printer Driver

This section describes how to uninstall the printer driver. The actual procedure may differ depending on the operating system.

Follow one of the appropriate procedures below.

Windows 95/98 - Uninstalling the RPCS Printer Driver

1. **Close all the applications that are currently running.**
2. **Click [Start] on the taskbar, point to [Settings], and click [Printers].**
   The **[Printers]** window appears.
3. **Click to select the icon of the printer you want to remove.**
4. **On the [File] menu, click [Delete].**
   A confirmation dialog box appears.
5. **Click [Yes] to uninstall the printer driver.**

Windows 2000 - Uninstalling the RPCS Printer Driver

Limitation

- Uninstalling a printer driver requires Manage Printers permission. Members of the Administrators and Power Users groups have Manage Printers permission by default. When you uninstall a printer driver, log on using an account that has Manage Printers permission.

1 Close all the applications that are currently running.

2 Click [Start] on the taskbar, point to [Settings], and click [Printers].

The **[Printers]** window appears.

3 Click to select the icon of the printer you want to remove.

4 On the [File] menu, click [Delete].

A confirmation dialog box appears.

5 Click [Yes] to uninstall the printer driver.

Windows NT 4.0 - Uninstalling the RPCS Printer Driver

Limitation

- Uninstalling a printer driver requires Full Control access permission. Members of the Administrators, Server Operators, Print Operators, and Power Users groups have Full Control Permission by default. When you install a printer driver, log on using an account that has Full Control permission.

1 Close all applications that are currently running.

2 Click [Start] on the taskbar, point to [Settings], and click [Printers].

The **[Printers]** window appears.

3 Click to select the icon of the printer you want to remove.

4 On the [File] menu, click [Delete].

A confirmation dialog box appears.

5 Click [Yes] to uninstall the printer driver.

Uninstalling the PostScript 3 Printer Driver

This section describes how to uninstall the PostScript 3 printer driver.
The actual procedure may differ depending on the operating system.
Follow one of the appropriate one of the following procedures below.

Windows 95/98 - Uninstalling the PostScript 3 Printer Driver

1. **Close all applications that are currently running.**
2. **Click [Start] on the taskbar, point to [Settings], and then click [Printers].**
   The **[Printers]** window appears.
3. **Click to select the icon of the printer you want to remove.**
4. **On the [File] menu, click [Delete].**
   A confirmation dialog box appears.
5. **Click [Yes] to uninstall the printer driver.**

Windows 2000 - Uninstalling the PostScript 3 Printer Driver

Limitation

- Uninstalling a printer driver requires Manage Printers permission. Members of the Administrators and Power Users groups have Manage Printers permission by default. When you uninstall a printer driver, log on using an account that has Manage Printers permission.

1 Close all the applications that are currently running.

2 Click [Start] on the taskbar, point to [Settings], and click [Printers].

The **[Printers]** window appears.

3 Click to select the icon of the printer you want to remove.

4 On the [File] menu, click [Delete].

A confirmation dialog box appears.

5 Click [Yes] to uninstall the printer driver.

Windows NT 4.0 - Uninstalling the PostScript 3 Printer Driver

Limitation

- Uninstalling a printer driver requires Full Control access permission. Members of the Administrators, Server Operators, Print Operators, and Power Users groups have Full Control Permission by default. When you uninstall a printer driver, log on using an account that has Full Control permission.

1. **Close all applications that are currently running.**
2. **Click [Start] on the taskbar, point to [Settings], and then click [Printers].**

   The **[Printers]** window appears.
3. **Click to select the icon of the printer you want to remove.**
4. **On the [File] menu, click [Delete].**

   A confirmation dialog box appears.
5. **Click [Yes] to uninstall the printer driver.**

Macintosh - Uninstalling the PostScript 3 Printer Driver

1. **Drag the “AdobePS” file from the [Extensions] folder in [System Folder] to [Trash].**
2. **Drag the PPD file and plug-in file from the [Printer Descriptions] folder in the [Extensions] folder in [System Folder] to [Trash].**

Sample Print

Use this function to print only the first set of a multiple-set print jobs. The remaining sets are saved on the optional Hard Disk Drive in the printer. The saved job can be printed or canceled from the printer's operation panel.

Important

- ❒ If you turn off the power switch, the job that was saved on the Hard Disk Drive will be deleted.

Limitation

- ❒ To use this function, the optional Hard Disk Drive must be installed on the printer.

Reference

- ❒ For more information about settings for printer driver, see the printer driver's Help file.

Note

- ❒ You can identify the file you want to print by the User ID and the time when the job was stored.
- ❒ The actual number of pages the printer can save depends on the contents of the print images. For example, the printer can save up to 30 jobs or 2,000 pages for Sample Print and Locked Print. It depends on the data volume.
- ❒ If the first set of the sample print file is not as you expected and you do not want to print the remaining sets, delete the sample print file using the operation panel.
- ❒ If you print the remaining sets of the sample print file, the job in the printer is deleted automatically.

1 From an application, select the menu command to print

The print dialog box appears.

2 Open the Printer Properties.

3 **From the [Job Type:] box, select [Sample Print].**

4 **In the [User ID:] box, type a User ID of up to eight alphanumeric characters.**

Note

- This is used to identify the user associated with a job.
- The User ID can consist of up to eight alphanumeric (a-z, A-Z, 0-9) characters.

5 **Click [OK].**

6 **After making all desired settings, click [OK].**

7 **Check the print job, and then select from the operation panel whether to print the remaining sets or delete them.**

Reference

- ⇒ P.70 *"Printing the Remaining Sets"*
- ⇒ P.72 *"Deleting a Sample Print File"*

Printing the Remaining Sets

1 Press [Menu].

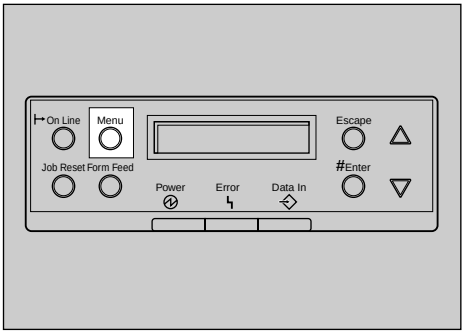

"Menu" appears on the panel display.

2 Press [▲] or [▼] to display "Sample Print", and then press [Enter].

```
Menu:
 Sample Print
```

The User ID and the time when the job was stored are displayed.

3 Press [▲] or [▼] to display the file you want to print, and then press [Enter].

```
Sample Print
 08:56 ABCD1234
```

4 Confirm that "Print File" is displayed, and then press 【Enter】.

```
Select Action:
Print File
```

The remaining sets are displayed.

Note

- ❒ To cancel printing, press 【Escape】.

5 Press 【Enter】. To change the number of sets you want to print, press 【▲】 or 【▼】 and select the number of sets, and then press 【Enter】.

```
Qty:  6(1-999)
Press # to Print
```

The job is printed, and the job that was saved on the Hard Disk Drive is deleted.

Deleting a Sample Print File

1 Press [Menu].

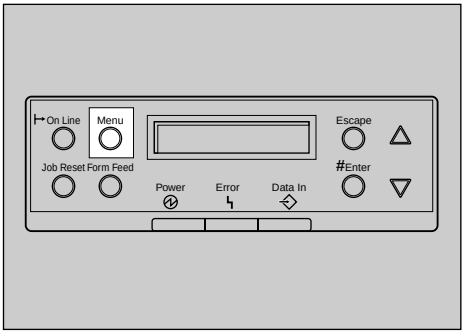

ZDJS001N

"Menu" appears on the panel display.

2 Press [▲] or [▼] to display the "Sample Print" menu, and then press [Enter].

```
Menu:
 Sample Print
```

3 Press [▲] or [▼] to display the file you want to delete, and then press [Enter].

The following message appears on the panel display.

```
Sample Print:
 08:56 ABCD1234
```

4 Press 【▲】 or 【▼】 to display "Delete File", and then press 【Enter】.

```
Select Action:
Delete File
```

Note

❒ If you want to cancel the deletion of a sample print file, press 【Escape】.

5 Press 【Enter】 to delete the file.

The following message appears on the panel display.

```
08:56 ABCD1234
Press# to Delete
```

6 Press 【On Line】.

"Ready " appears on the panel display.

```
Ready
```

Checking the Error Log

When a print job is not saved on the Hard Disk Drive, it remains in the error log and can be checked using the operation panel.

Limitation

- ❒ The error log displays up to 20 of the newest jobs. If you turn off the power switch, the log up to then is deleted.

1 Press [Menu].

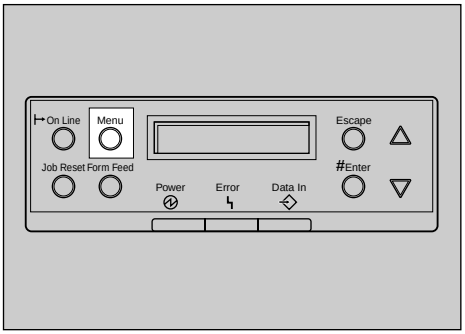

ZDJS001N

"Menu" appears on the panel display.

2 Press [▲] or [▼] to display "Sample Print", and then press [Enter].

```
Menu:
 Sample Print
```

The User ID and the time when the job was stored are displayed.

3 **Press 【▲】 or 【▼】 to display "Error File(s)", and then press 【Enter】.**

```
Sample Print:
 Error File(s)
```

4 **Press 【▲】 or 【▼】 to check the log.**

```
Error File(s):
 06:52 AB5D1234
```

After you finish checking the error log, press 【Escape】.

The display is returned to the Sample Print job selection menu.

Note

- ❒ To print a document with an error, either print or delete the job saved on the Hard Disk Drive, and then command the host computer to print again.

5 **When you finish checking the error log, press 【Escape】.**

The display is returned to the Sample Print job selection menu.

6 **Press 【On Line】.**

"Ready " appears on the panel display.

```
Ready
```

Locked Print

Use this function to maintain privacy when printing confidential documents. Documents will not be printed out automatically, unless a password is entered, using the operation panel after sending the print job.

Important

- ❒ If you turn off the power switch, the job that was saved on the Hard Disk Drive will be deleted.

Limitation

- ❒ To use this function, the optional Hard Disk Drive must be installed on the printer.

Reference

- ❒ For more information about settings for printer driver, see the printer driver's Help file.

Note

- ❒ You can identify the file you want to print by the User ID and the time when the job was stored.
- ❒ The actual number of pages the printer can save depends on the contents of the print images. For example, the printer can save up to 30 jobs or 2,000 pages for Sample Print and Locked Print. It depends on the data volume.

After the locked print file is printed, the job in the printer is deleted automatically.

1 From an application, select the menu command to print.

The print dialog box appears.

2 Open the Printer Properties.

3 From the [Job Type:] box, select [Locked Print].

4 In the [User ID:] box, type a User ID of up to eight alphanumeric characters.

Note

- ❒ This is used to identify the user associated with a job.
- ❒ The User ID can consist of up to eight alphanumeric (a-z, A-Z, 0-9) characters.

5 In the [Password:] box, type a password of four digits.

Note

- ❒ The password must be four digits (0-9).

6 Command to print.

The job is saved on the Hard Disk Drive.

7 Enter the password using the operation panel, and then specify whether to print or delete.

Reference

- ❒ ⇒ P.78 *"Entering the Password"*
- ❒ ⇒ P.80 *"Deleting the Locked Print File"*

Limitation

- ❒ Print jobs are not saved on the Hard Disk Drive in the following cases. You can check the Error Log for jobs that were not saved.
  - When there are 30 Sample Print and Locked Print jobs saved on the Hard Disk Drive, and a 31st job is transmitted.
  - The total number of pages saved on the Hard Disk Drive exceeds 2,000 pages.

Entering the Password

1 Press [Menu].

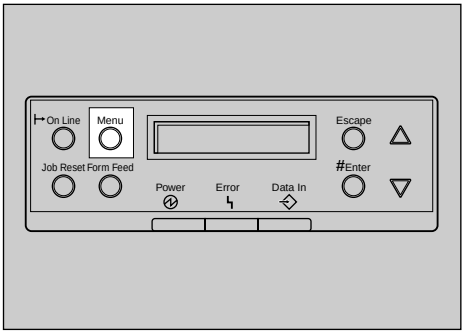

ZDJS001N

"Menu" appears on the panel display.

2 Press [▲] or [▼] to display "Locked Print", and then press [Enter].

```
Menu:
 Locked Print
```

The User ID and the time when the job was stored are displayed.

3 Press [▲] or [▼] to display a file you want to print, and then press [Enter].

```
Locked Print
 08:56   ABCD1234
```

4 **Enter the password.**

❶ **Press 【▲】 or 【▼】 to enter the left most digit of the password, and then press 【Enter】.**

```
Password:
[0---]
```

❷ **The next digit appears.**

```
Password:
[*0--]
```

❸ **Enter the remaining digit of the password, and then press 【Enter】.**

5 **Confirm that "Press # to Print" is displayed, and then press 【Enter】.**

```
Select Action:
Print File
```

Note

❒ If you want to cancel printing, press 【Escape】.

6 **Press 【Enter】.**

```
08:56 ABCD1234
Press # to Print
```

The job is printed, and the job that was saved on the Hard Disk Drive is deleted.

Deleting the Locked Print File

1 Press [Menu].

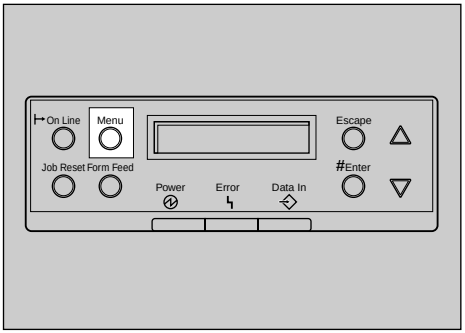

ZDJS001N

"Menu" appears on the panel display.

2 Press [▲] or [▼] to display the "Locked Print" menu, and then press [Enter].

```
Menu:
 Locked Print
```

3 Press [▲] or [▼] to display a file you want to delete.

```
Locked Print
 08:56  ABCD1234
```

4 **Enter the password of the locked print file.**

❶ **Press 【▲】 or 【▼】 to enter the left most digit of the password, and then press 【Enter】.**

```
Password:
[0---]
```

❷ **The next digit appears.**

```
Password:
[*0--]
```

❸ **Repeat steps ❶ and ❷ to enter the remaining password digits, and then press 【Enter】.**

5 **Press 【▲】 or 【▼】 to display "Delete File", and then press 【Enter】.**

```
Select Action:
Delete File
```

Note

❒ If you want change the locked print file, press 【Escape】.

6 **Press 【Enter】.**

"Deleted" appears on the panel display, and then the printer returns to the previous menu.

Checking the Error Log

When a print job is not saved on the Hard Disk Drive, it remains in the error log and can be checked using the operation panel.

Limitation

- ❒ The error log displays up to 20 of the newest jobs. If you turn off the printer power, the log up to then is deleted.

1 Press [Menu].

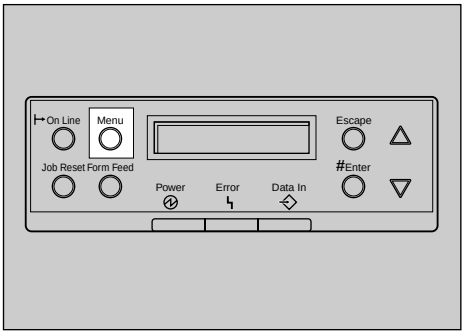

ZDJS001N

"Menu" appears on the panel display.

2 Press [▲] or [▼] to display "Locked Print", and then press [Enter].

```
Menu:
 Locked Print
```

The User ID and the time when the job was stored are displayed.

3 **Press 【▲】 or 【▼】 to display "Error File(s)", and then press 【Enter】.**

```
Locked Print:
 Error File(s)
```

4 **Press 【▲】 or 【▼】 to check the log.**

```
Error File(s):
 06:52 AB5D1234
```

After you finish checking the error log, press 【Escape】.

The display is returned to the Locked Print job selection menu.

Note

- ❒ To print a document with an error, either print or delete the job saved on the Hard Disk Drive, and then command the host computer to print again.

5 **When you finish checking the error log, press 【Escape】.**

The display is returned to the Sample Print job selection menu.

6 **Press 【On Line】.**

"Ready " appears on the panel display.

```
Ready
```

Checking the Printer Status

SmartNetMonitor for Client

1. **Start up SmartNetMonitor for Client.**
2. **Right-click the SmartNetMonitor for Client icon from the task bar, and then point and left-click [Options] from the displayed menu.**

   The **[SmartNetMonitor for Client-Options]** window is displayed.
3. **Select the printer you want to use, check [To be Monitored], and then click [OK].**
4. **Right-click the SmartNetMonitor for Client icon from the task bar, and then point and left-click the printer you want monitor.**

   The **[Status]** window of the target printer to be monitored is opened.
5. **Click the [Configuration] tab to find the amount of paper in the Paper Tray, etc..**

Note

- ❒ See the Help files for SmartNetMonitor for Client for details on each item.

Web Browser

1 Start up the web browser.

2 Type "http://(the IP address of the printer you want the status displayed)" for the address.

The status of the selected printer is displayed on the web browser.

3 Click [Status] to find the amount of paper in the Paper Tray, etc..

Note

❒ See the Help files for details on each item.

Color Guide

Color Printing Basics

Additive (Emitted) and Subtractive (Reflected) Color Models

All light is a mixture of red, green, and blue, which is normally called the RGB model. When red, green, and blue are of equal intensities, the RGB color model produces white.

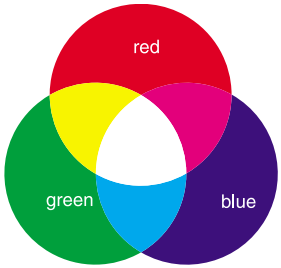

Note

❒ RGB is also called additive or emitted color. The colors on your computer screen are produced by varying the intensities of RGB.

Printed color is a mixture of cyan, magenta, and yellow, which is normally called the CMY color model. When mixed in equal proportions the CMY color model produces black.

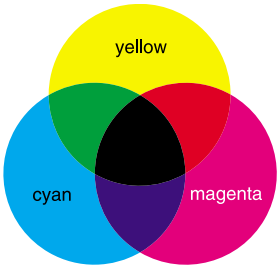

Note

- ❒ CMY is also called subtractive or reflective color. The printer uses CMY toner plus K (black) toner (CMYK color model) to provide full color printing.

The colors of the RGB color model can be mixed to produce the cyan, magenta, and yellow of the CMY color model and vice versa. Two colors of one model are mixed to produce the color of the other model (mixing blue and green produces cyan, for example). The remaining color is the complement of the color produced (red in this example). Complementary colors are: red and cyan, green and magenta, blue and yellow.

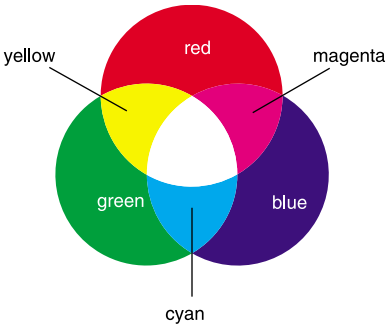

Printed Color

The printer produces full-color output using four toner colors: cyan, magenta, yellow, and black. These four colors make up the CMYK color model.

Note

- ❒ Mixing CMY in equal proportions should hypothetically produce pure black, but imperfections in the ink cause an equal measure of these colors to produce a muddy or dark brown. Black toner is added to the color model in order to make it possible to produce pure black.

For example, if the image is created with cyan only, there is no problem in printing all of it with cyan toner. However, full-color images are actually comprised of 10,000s of fine colors. These fine colors can be expressed by changing the ratio of CMYK toner particles to be printed per unit surface.

There are also dark and light shadings to each color. These shadings can be expressed by changing the amount of toner particles to be printed per unit surface.

Staple and Punch Position

Stapling

By installing the 2 Tray Finisher, you can staple one printing at a time when printing multiple copies. See the Help files of the printer driver for details on the print methods.

Limitation

- ❒ The printer cannot staple paper that is fed from the Bypass Tray.
- ❒ The printer cannot sort "Thick", "Labels", or "OHP" paper types in the Paper Tray.

Note

- ❒ If you cannot make the settings for stapling even when the 2 Tray Finisher is connected, the optional devices might not have been attached properly. Make the proper settings for the optional devices in the printer driver's dialog box. See Printer Client Reference 1.
- ❒ Outputs of staple depend on the print direction and feed direction. The following table shows the staple positions.

❖ Staple Position

Feed Direction	Print direction	Staple Position
	Portrait	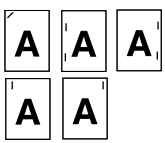
	Landscape	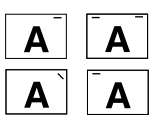
	Portrait	
	Landscape	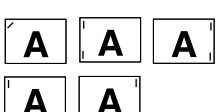

❒ When double-sided printing is selected, adjust the staple position to the binding direction.

❒ If you are punching at the same time, specify the same side.

❒ The paper sizes and number of pages that can be stapled are displayed below.

Paper Size	Staple Capacity
A3, 11 × 17, B4, Legal	30
A4, B5, Letter	50

Punching

Used to punch holes in the printing.

Limitation

- ❒ The printer cannot punch paper that is fed from the Bypass Tray.
- ❒ To use this function, the 2 Tray Finisher must be installed on the printer.
- ❒ The printer cannot sort "Thick", "Labels", or "OHP" paper types in the Paper Tray.

Note

- ❒ Outputs of punch depend on the print direction and feed direction. The following table shows the punch positions.

❖ Punch Position

Feed Direction	Print direction	Punch Position		
		2 holes	3 holes	4 holes
	Portrait			
	Landscape			
	Portrait			
	Landscape			

❒ If you cannot make the settings for punching even when the 2 Tray Finisher is connected, the optional devices might not have been attached properly. Make the proper settings for the optional devices in the printer driver's dialog box. See Printer Client Reference 1.

❒ When Duplex Print is selected, adjust the punch position to the binding direction.

❒ The paper sizes that can be punched are displayed below.

Type	Feed Direction	Paper Size
2 holes	←	A4, 16K, Letter
	←	A3, 8K, 11×17
NA 3 holes	←	A4, B5, 16K, Letter
	←	A3, B4, 8K, 11×17
EU 4 holes	←	A4, B5, 16K, Letter
	←	A3, B4, 8K, 11×17
Northern EU 4 holes	←	A4, B5, 16K, Letter
	←	A3, B4, A4, B5, A5, 8K, 16K, 11×17, Legal, Foolscap, Folio, F, Letter

Collate and Job Separation

Reference

❒ For more information about collate and job separation, see the printer driver's Help file.

❖ Collate

Outputs can be assembled as sets in sequential order.

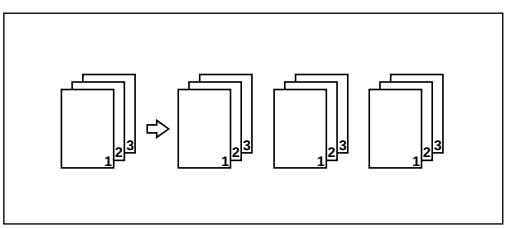

❖ Job Separation

The shift tray moves backward or forward each time the copies of one set or those of each job are delivered, causing the next copy to shift when delivered so that you can differentiate each set or job.

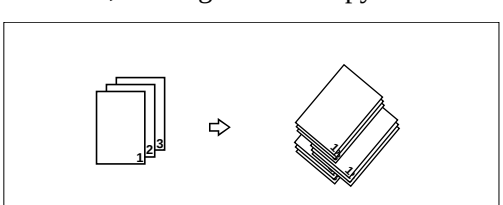

Limitation

- ❒ The printer cannot collate or job separation printing on the paper loaded on the Bypass Tray.
- ❒ The printer cannot collate or job separation printing on "Thick", "Labels", and "OHP" paper types in the Paper Tray.
- ❒ To use these function, a Memory Unit of at least 128MB or Hard Disk Drive must be installed on the printer.
- ❒ Job separation requires the optional 2 Tray Finisher must be installed on the printer.

Note

- ❒ If you cannot make the settings for stapling even when the 2 Tray Finisher is connected, the optional devices might not have been attached properly. Make the proper settings for the optional devices in the printer driver's dialog box. See Printer Client Reference 1.
- ❒ If the output end is the 2 Tray Finisher Shift Tray, job separation is executed.
- ❒ If you make the setting for "job separation" with the printer driver, the output end becomes the 2 Tray Finisher Shift Tray automatically. The RPCS printer driver automatically set for "job separation" , if you select the 2 Tray Finisher Tray for the output tray.

INDEX

A

Additive (Emitted) Color Models, 86
Agfa Font Manager, 20

C

Changing the Zone (Macintosh), 10
Changing to EtherTalk, 9
Checking the Error Log, 74, 82
Checking the Printer Status, 84
CMY, 87
CMY color model, 87
Collate, 94
Color Guide, 86
color models, 86
Color Printing Basics, 86
configuration
    Macintosh, 8
    NetWare, 11

D

Deleting a Sample Print File, 72
Deleting the Locked Print File, 80

E

Entering the Password, 78
EtherTalk, 9

J

Job Separation, 94

M

Macintosh, 8
    uninstall, *PostScript*, 67

N

NetWare, 11
NetWare Configuration
    Windows 2000, 14
    Windows 95/98/Me, 11
    Windows NT 4.0, 17

P

PCL 5c, 22
    Windows 2000, *uninstalling*, 60
    Windows 95/98, *uninstalling*, 59
    Windows NT 4.0, *uninstalling*, 61
PostScript, 22
    Macintosh, *uninstall*, 67
PostScript 3
    Windows 2000, *uninstalling*, 66
    Windows 95/98, *uninstalling*, 65
    Windows NT 4.0, *uninstalling*, 67
printer driver, 21
printer name, 10

Printing a Locked Print File, 76
Printing the Remaining Sets, 70
Punching, 91

R

RGB, 86
RGB color model, 86
RPCS
Windows 2000, *uninstalling*, 63
Windows 95/98, *uninstalling*, 62
Windows NT 4.0, *uninstalling*, 64

S

Sample Print, 68
Setting up the Printer Driver and Canceling a Print Job, 28
SmartNetMonitor for Admin, 23
SmartNetMonitor for Client, 25
Software and Utilities Included on the CD-ROM, 20
Sorting copies into sets, 94
Stapling, 89
Subtractive (Reflected) Color Models, 86

T

troubleshooting, 84

W

Windows 2000
canceling a job, 55
PCL 5c, *uninstalling*, 60
PostScript, *uninstalling*, 66
printer properties, *PCL 5c*, 38
printer properties, *PostScript 3*, 46
printer properties, *RPCS*, 30
RPCS, *uninstalling*, 63
Windows 95/98
PCL 5c, *uninstalling*, 59
PostScript, *uninstalling*, 65
RPCS, *uninstalling*, 62
Windows 95/98/Me
canceling a job, 54
printer properties, *PCL 5c*, 36
printer properties, *PostScript 3*, 44
printer properties, *RPCS*, 28
Windows NT 4.0
canceling a job, 57
document defaults, *PCL 5c*, 42
document defaults, *PostScript 3*, 50
document defaults, *RPCS*, 34
PCL 5c, *uninstalling*, 61
PostScript, *uninstalling*, 67
printer properties, *PCL 5c*, 41
printer properties, *PostScript 3*, 49
printer properties, *RPCS*, 33
RPCS, *uninstalling*, 64

Copyright © 2001

Introduction 3

1. PostScript 3

Installing the PostScript Printer Driver 4
Windows 95/98/Me - Installing the PostScript Printer Driver 4
Windows 2000 - Installing the PostScript Printer Driver 7
Windows NT 4.0 - Installing the PostScript Printer Driver 10
Macintosh 14

Uninstalling the PostScript Printer Driver 18
Windows 95/98/Me - Uninstalling the PostScript Printer Driver 18
Windows 2000 - Uninstalling the PostScript Printer Driver 19
Windows NT 4.0 - Uninstalling the PostScript Printer Driver 20

Installable Options 21

Printing a Document 22
Sample Print 35
Locked Print 43

Printer Utility for Mac 54
Installing Printer Utility for Mac 54
Starting Printer Utility for Mac 55
Printer Utility for Mac Functions 55
Downloading PS Fonts 57
Displaying Printer's Fonts 58
Deleting Fonts 59
Initializing the Printer Disk 60
Page Setup 61
Printing Font Catalog 61
Printing Font Sample 61

Renaming the Printer 62
Restarting the Printer 63
Downloading PostScript Files 63
Selecting the Zone 64
Displaying the Printer Status 65
Launching the Dialogue Console 65

INDEX 67

Introduction

To get maximum versatility from this machine all operators should carefully read and follow the instructions in this manual. Please keep this manual in a handy place near the printer.

Please read the Safety Information before using this printer. It contains important information related to USER SAFETY and PREVENTING EQUIPMENT PROBLEMS.

Important

Parts of this manual are subject to change without prior notice. In no event will the company be liable for direct, indirect, special, incidental, or consequential damages as a result of handling or operating the machine.

Trademarks

Microsoft®, Windows® and Windows NT® are registered trademarks of Microsoft Corporation in the United States and/or other countries.

Adobe® and PostScript® are registered trademarks of Adobe Systems Incorporated.

Appletalk, Apple, Macintosh is a registered trademark of Apple Computer, Incorporated.

Other product names used herein are for identification purposes only and might be trademarks of their respective companies. We disclaim any and all rights in those marks.

Notes:

Some illustrations might be slightly different from your machine.

Certain options might not be available in some countries. For details, please contact your local dealer.

Installing the PostScript Printer Driver

This section describes basic instructions for installing the printer driver. The actual procedure may differ depending on the operating system. Follow one of the appropriate procedures below.

Important

- ❒ Before updating the printer driver by installing the latest version, you should uninstall any former version first. See the Printer Client Reference 2.

Windows 95/98/Me - Installing the PostScript Printer Driver

Installing the printer driver

Important

- ❒ Be sure to install the PPD file for Windows 95/98/Me. Do not accidentally install the PPD file for Windows 2000 or Windows NT 4.0.

1 **Close all applications that are currently running.**

2 **Click [Start] on the taskbar, point to [Settings], and then click [Printers].**

The **[Printers]** window appears.

3 **Double-click the [Add Printers] icon.**

[Add Printer Wizard] starts.

4 **Click [Next].**

5 Click [Local Printer], and then click [Next].

A dialog box for selecting the printer manufacturer and model name appears.

6 Click [Have Disk].

A dialog box for installing the printer driver from a disk appears.

7 Hold down the 【SHIFT】 key and insert the CD-ROM into the CD-ROM drive. Keep the 【SHIFT】 key held down until the computer has finished accessing the CD-ROM.

If the Auto Run program starts, click **[Cancel]**.

8 Click [Browse].

9 Select the CD-ROM in the [Drives:] list box.

10 In the [Folders:] box, double-click [DRIVERS], [PS], [WIN9X_ME]. Then double-click the folder of the appropriate language for the operating system. Finally, click [DISK1].

11 Click [Open].

12 Click [OK].

13 Click to select the name of the printer whose driver you want to install, and then click [Next].

14 In the [Available ports:] box, click to select [Printer Port], and then click [Next].

15 Change the name of the printer if you want, and then click [Next].

16 Select whether or not you want to print a test page, and then click [Finish].

17 If you are asked whether you want to restart Windows, select [Yes]. If you are not asked, restart Windows after completing the installation.

Setting up options

Important

- If the printer is equipped with certain options (e.g. the Paper Feed Unit or the Memory Unit), you should set up the options with the printer driver.

1. **Click [Start] on the taskbar, point to [Settings], and then click [Printers].**

   The **[Printers]** window appears.

2. **Click to select the icon of the printer you want to use.**

3. **On the [File] menu, click [Properties].**

   The **[Printer Properties]** dialog box appears.

4. **Click the [Accessories] tab.**

5. **In the [Options] group, select the option you have installed on the printer.**

6. **Use the [Change settings for:] list box to select the appropriate setting for the selected option.**

7. **Click [Apply] to apply the settings you made.**

8. **Repeat steps 5 – 7 for all options.**

9. **After making all settings for options, click [OK].**

Windows 2000 - Installing the PostScript Printer Driver

Installing the printer driver

Limitation

- ❒ Installing a printer driver requires Manage Printers permission. Members of the Administrators, and Power Users groups have Manage Printers permission by default. When you install a printer driver, log on using an account that has Manage Printers permission.

Important

- ❒ Be sure to install the PPD file for Windows 2000. Do not accidentally install the PPD file for Windows 95/98/Me or Windows NT 4.0.

1 Close all applications that are currently running.

2 Click [Start] on the taskbar, point to [Settings], and then click [Printers].

The **[Printers]** window appears.

3 Double-click the [Add Printers] icon.

[Add Printer Wizard] starts.

4 After confirming that the [Local Printer] option is selected, click [Next].

A dialog box for selecting the printer port appears.

5 Select the check box of the port you want to use, and then click [Next].

A dialog box for selecting the printer manufacturer and model name appears.

6 Click [Have Disk].

A dialog box for installing the driver from a disk appears.

7 Hold down the left 【SHIFT】 key and insert the CD-ROM into the CD-ROM drive. Keep the left 【SHIFT】 key held down until the computer has finished accessing the CD-ROM.

If the Auto Run program starts, click **[Cancel]**.

8 Change the drive name in the list box to the name of the CD-ROM drive, and then click [Browse].

9 In the [Folders:] box, double-click [DRIVERS], [PS], [WIN2000]. Then double-click the folder of the appropriate language for the operating system. Finally, click [DISK1].

10 Click [Open].

11 Click [OK].

A printer model selection dialog box appears.

12 Click to select the name of the printer whose driver you want to install, and then click [Next].

A dialog box for changing the printer name appears.

13 Change the name of the printer if you want, and then click [Next].

14 Click [Next].

15 In the next dialog box you will be asked to print a test page, select [No], and then click [Next].

A confirmation dialog box appears.

16 Confirm the settings you have set, and then click [Finish].

The installer copies the printer driver files from the CD-ROM to the computer's hard disk.

17 Set up the options with the printer driver.

18 Restart Windows.

Note

❒ Print a test page after completing installation.

Setting up options

Limitation

❒ Changing the setting of the printer requires Manage Printers permission. Members of the Administrators and Power Users groups have Manage Printers permission by default. When you set up options, log on using an account that has Manage Printers permission.

Important

❒ If the printer is equipped with certain options (e.g. the Paper Feed Unit or the Memory Unit), you should set up the options with the printer driver.

1 Click [Start] on the taskbar, point to [Settings], and then click [Printers].

The **[Printers]** window appears.

2 Click the icon of the printer you want to use. On the [File] menu, click [Properties].

3 Click the [Device Settings] tab.

4 Click the installed option in the [Installable Options] box, and then select [Installed] or [Not Installed] from the drop-down list box.

5 Repeat step 4 for all options.

6 After making all settings you want, click [OK].

Windows NT 4.0 - Installing the PostScript Printer Driver

Installing the printer driver

Limitation

- ❒ Installing a printer driver requires Full Control access permission. Members of the Administrators, Server Operators, Print Operators, and Power Users groups have Full Control permission by default. When you install a printer driver, log on using an account that has Full Control permission.

Important

- ❒ The CD-ROM containing the Windows NT Server operating system version 4.0, or the Windows NT Workstation operating system is required for installing the printer driver.
- ❒ We recommend that you upgrade the Windows NT 4.0 operating system to Service Pack 4 or later before installing the printer driver. Contact your Windows retailer for more information about the latest version available.
- ❒ Be sure to install the PPD file for Windows NT 4.0. Do not accidentally install the PPD file for Windows 95/98/Me or Windows 2000.

1 Close all applications that are currently running.

2 Click [Start] on the taskbar, point to [Settings], and then click [Printers].

The **[Printers]** window appears.

3 Double-click the [Add Printers] icon.

[Add Printer Wizard] starts.

4 After confirming that the [My Computer] option is selected, click [Next].

A dialog box for selecting the printer port appears.

5 Select the check box of the port you want to use, and then click [Next].

A dialog box for selecting the printer manufacturer and model name appears.

6 Click [Have Disk].

A dialog box for installing the driver from a disk appears.

7 Hold down the 【SHIFT】 key and insert the CD-ROM into the CD-ROM drive. Keep the 【SHIFT】 key held down until the computer has finished accessing the CD-ROM.

If the Auto Run program starts, click **[Cancel]**.

8 Change the drive name in the list box to the name of the CD-ROM drive, and then click [Browse].

9 In the [Folders:] box, double-click [DRIVERS], [PS], [NT4]. Then double-click the folder of the appropriate language for the operating system. Finally, click [DISK1].

10 Click [Open].

11 Click [OK].

A printer model selection dialog box appears.

12 Click to select the name of the printer whose driver you want to install, and then click [Next].

A dialog box for changing the printer name appears.

13 Change the name of the printer if you want, and then click [Next].

14 Click [Next].

15 In the next dialog box asking if you want to print a test page, select [No] and then click [Finish].

The installer copies the printer driver files from the CD-ROM to the computer's hard disk.

Note

- ❒ Print a test page after completing installation and restarting Windows.

16 If you are asked whether you want to restart Windows, select [Yes]. If you are not asked, restart Windows after completing the installation.

Setting up options

Limitation

- ❒ Changing the setting of the printer requires Full Control access permission. Members of the Administrators, Server Operators, Print Operators, and Power Users groups have Full Control permission by default. When you setup options, log on using an account that has Full Control permission.

Important

- ❒ If the printer is equipped with certain options (e.g. the Paper Feed Unit or the Memory Unit), you should set up the options with the printer driver.

1 Click [Start] on the taskbar, point to [Settings], and then click [Printers].

The **[Printers]** window appears.

2 Click to select the icon of the printer you want to use.

3 On the [File] menu, click [Properties].

The **[Printer Properties]** dialog box appears.

4 Click the [Device Settings] tab.

5 In the [Installable Options] group, select the option you have installed on the printer.

The current setting appears in the **[Change Setting]** box.

6 Use the [Change Setting:] list to select the appropriate setting for the selected option.

7 Repeat steps 5 – 6 for all options.

8 After making all option settings, click [OK].

Using Adobe PageMaker Version 6.0 or 6.5

If you use the printer under Windows 95/98/Me, Windows 2000, Windows NT 4.0 with Adobe PageMaker, you need to copy the PPD file to the PageMaker folder.

The PPD file is the file with extension ".ppd" on the CD-ROM. It is in the folder as follows:

- Windows 95/98/Me
  DRIVERS\PS\WIN9X_ME\(Language)\DISK1\
- Windows 2000
  DRIVERS\PS\WIN2000\(Language)\DISK1\
- Windows NT 4.0
  DRIVERS\PS\WIN\NT4\(Language)\DISK1\

The **[WIN95_98]** folder, inside the **[PS]** folder is for the Windows 95/98/Me operating system. Use the folder at this level that is appropriate for the operating system you are using.

The third folder, "(Language)" may be substituted by an appropriate language name.

Copy this file to the PageMaker folder.

For PageMaker 6.0 default installation, the folder is "C:\PM6\RSRC\PPD4", and for PageMaker 6.5 default installation, the directory is "C:\PM65\RSRC\USENGLISH\PPD4". The "USENGLISH" may differ depending on your language selection.

Macintosh

Macintosh - Installing the PostScript Printer Driver

It is necessary to install a printer driver and a PPD file to print from a Macintosh.
Follow these steps to install a printer driver and a PPD file into a Macintosh using MacOS 7.6.1 or later.

1. **Insert the CD-ROM into the CD-ROM drive.**
2. **Double-click the CD-ROM icon.**
3. **Double-click the [PS] folder.**
4. **Double-click the folder of the language you use.**
5. **Open [DISK1], and then double-click the installer icon.**
6. **Follow the instructions on the screen.**
7. **Double-click [Extensions].**
8. **Double-click [Printer Descriptions].**
9. **Double-click the CD-ROM icon on the desktop.**
10. **Double-click [DISK1] in the folder of the language you use.**
11. **Drag the PPD file into [Printer Descriptions].**
12. **Drag the Plugin file into [Printer Descriptions] in [Extensions] in [System Folder].**
13. **Restart the Macintosh.**

Setting Up the PPD File

Preparation

❒ Confirm that the printer is connected to an AppleTalk network before performing the following procedure.

1. **On the [Apple] menu, select [Chooser].**
2. **Click the [Adobe PS] icon.**
3. **In the [Select a PostScript Printer:] list, click the name of the printer you want to use.**
4. **Click [Create].**
5. **Click the printer you want to use, and then click [Select].**

   The PPD file is set up, and the **[Adobe PS]** icon appears at the left of the printer name in the list. Next, follow the procedure on p.15 "Setting Up Options" to make the option settings, or close the **[Chooser]** dialog box.

Setting Up Options

1. **On the [Apple] menu, select [Chooser].**
2. **Click the [Adobe PS] icon.**
3. **In the [Select the PostScript Printer:] list, click the name of the printer you want to use, and then click [Setup].**
4. **Click [Configure].**

   A list of options appears.

5 Select the option you want to set up, and then select the appropriate setting for it.

Note

- ❒ If the option you want to set up is not displayed, the PPD file might not be set up correctly. Check the name of the PPD file shown in the dialog box.

6 Click [OK].

The list of options closes.

7 Click [OK].

The **[Chooser]** dialog box appears.

8 Close the [Chooser] dialog box.

Installing the ColorSync profile

ColorSync profile make it possible for the printer to print colors of similar intensity to those that appear on your computer display. You must install the ColorSync profile to use this feature.

Note

- ❒ The ColorSync profile conform with the color characteristics defined by the International Color Consortium (ICC).
- ❒ Some computer displays may require particular settings to be controlled by ColorSync. See the documentation that comes with your display for details.

The following procedure shows how to install the ColorSync Profile.

1 Start the Macintosh.

2 Double-click the hard disk icon, and then open the appropriate folder for installing the ColorSync profile.

Note

❒ The location of the appropriate folder may differ depending on the version of the operating system. The following are examples:

- System:Preferences:ColorSync Profiles
- System:ColorSync Profiles

3 Insert the CD-ROM into the CD-ROM drive.

The icon of the CD-ROM appears.

4 Double-click the CD-ROM icon.

The contents of the CD-ROM appear.

5 Double-click the [ColorSync™ Profiles] folder in the CD-ROM.

6 Drag the file to the [ColorSync™ Profiles] folder on the hard disk.

The ColorSync profile is installed.

Uninstalling the PostScript Printer Driver

This section describes how to uninstall the PostScript printer driver.
The actual procedure may differ depending on the operating system.
Follow the appropriate procedure below.

Windows 95/98/Me - Uninstalling the PostScript Printer Driver

1. **Close all applications that are currently running.**
2. **Click [Start] on the taskbar, point to [Settings], and then click [Printers].**
   The **[Printers]** window appears.
3. **Click to select the icon of the printer you want to remove.**
4. **On the [File] menu, click [Delete].**
   A confirmation dialog box appears.
5. **Click [Yes] to uninstall the printer driver.**

Windows 2000 - Uninstalling the PostScript Printer Driver

Limitation

- Uninstalling a printer driver requires Manage Printers permission. Members of the Administrators and Power Users groups have Manage Printers permission by default. When you uninstall a printer driver, log on using an account that has Manage Printers permission.

1 Close all the applications that are currently running.

2 Click [Start] on the taskbar, point to [Settings], and click [Printers].

The **[Printers]** window appears.

3 Click to select the icon of the printer you want to remove.

4 On the [File] menu, click [Delete].

A confirmation dialog box appears.

5 Click [Yes] to uninstall the printer driver.

Windows NT 4.0 - Uninstalling the PostScript Printer Driver

Limitation

- Uninstalling a printer driver requires Full Control access permission. Members of the Administrators, Server Operators, Print Operators, and Power Users groups have Full Control Permission by default. When you uninstall a printer driver, log on using an account that has Full Control permission.

1 Close all applications that are currently running.

2 Click [Start] on the taskbar, point to [Settings], and then click [Printers].

The **[Printers]** window appears.

3 Click to select the icon of the printer you want to remove.

4 On the [File] menu, click [Delete].

A confirmation dialog box appears.

5 Click [Yes] to uninstall the printer driver.

Installable Options

The following options are available.

❖ Paper Feed Unit

- 500 sheets x 1 Tray
- 500 sheets x 2 Tray
- 2000 sheets LCT

❖ Output Paper Device

- Duplex Unit
- Mailbox
- Finisher
- Finisher with Punch
- Finisher with Staple

❖ Memory Unit

- Printer Hard Disk
- SDRAM

Printing a Document

This section describes how to print a document using printer specific functions.

❖ Color Mode

The following table shows the tabs or menus where you can select this function.

Important

❒ When you use Windows 95/98/Me, you can configure this function from “Color/Black and White”.

Note

❒ Use this to set the output color to **[Black and White]** or **[Color]**.

Windows 95/98/Me	**[Setup]** tab
Windows 2000	**[Printer Features]** on **[Advanced...]** on the **[Paper/Quality]** tab in the Printing Preferences Properties
Windows NT 4.0	**[Printer Features]** on **[Document Options]** on the **[Advanced]** tab
Macintosh	**[Printer Specific Options]** in the print dialog box

❖ Color Setting

The following table shows the tabs or menus where you can set the correction method used for color conversion.

Important

❒ When you use Windows 95/98/Me, you can configure **[Color Setting]** in **[Advanced]** by selecting **[Manual]** from the **[Color]** setting. **[Automatic]** sets the printer to "Super Fine".

Note

- ❒ The color rendering dictionary that is selected in the “Color Profile” setting is used.
- ❒ Use this setting to set the correction method used for color conversion. The following items are available: **[Off]** *1 , **[Fine]** *2 , **[Super Fine]** *3 .

*1 No modification to the color setting.

*2 Select this setting to perform color matching based on one of the printer's built-in color rendering dictionaries and perform CMYK conversion. This setting perform the printing which output target is Moritor $\gamma = 1.8$.

*3 Select this setting to use a color rendering dictionary as in the "Fine" setting but produce output that is more vivid. Use this setting to emphasis light colors. This setting perform the printing which output target is Moritor $\gamma = 2.2$.

Windows 95/98/Me	**[Advanced]** on the **[Print Quality]** tab
Windows 2000	**[Printer Features]** on **[Advanced...]** on the **[Paper/Quality]** tab in the Printing Preferences Properties
Windows NT 4.0	**[Printer Features]** on **[Document Options]** on the **[Advanced]** tab
Macintosh	**[Printer Specific Options]** in the print dialog box

❖ Color Profile

The following table shows the tabs or menus where you can select this function.

Important

❒ When you use Windows 95/98/Me, you can configure **[Color Profile]** in **[Advanced]** by selecting **[Manual]** from the **[Color]** setting. **[Automatic]** sets the printer to "Presentation".

Note

❒ Use this to select a color rendering dictionary (CRD). The CRD is referred to for color matching, so you should select the appropriate CRD for the document you are printing. The CRD you select is also referred to when **[Fine]** or **[Super Fine]** is selected for “Color Setting”. The following items are available: **[Photograph]** *1 , **[Presentation]** *2 and **[Solid Color]** *3 .

*1 Use this setting to enhance the reproduction of photos and graphics that include midtones.

*2 Use this setting to enhance the reproduction of documents that contain text and graphics. This CRD is best for printing colored charts, graphs, presentation materials and so on. If you use this CRD for printing photographs, the color or gradations might not be reproduced well.

*3 Use this setting to print specific colors, logos and so on.

Windows 95/98/Me	**[Advanced]** on the **[Print Quality]** tab
Windows 2000	**[Printer Features]** on **[Advanced...]** on the **[Paper/Quality]** tab in the Printing Preferences Properties
Windows NT 4.0	**[Printer Features]** on **[Document Options]** on the **[Advanced]** tab
Macintosh	**[Printer Specific Options]** in the print dialog box

❖ Gradation

Use this to set the printing mode to **[Standard]** or **[Fast]**.

Limitation

❒ When the resolution option is set to **[1200dpi]**, the gradation option must be set to **[Fast]**.

Windows 95/98/Me	**[Advanced]** on the **[Print Quality]** tab
Windows 2000	**[Printer Features]** on **[Advanced...]** on the **[Paper/Quality]** tab in the Printing Preferences Properties
Windows NT 4.0	**[Printer Features]** on **[Document Options]** on the **[Advanced]** tab
Macintosh	**[Printer Specific Options]** in the print dialog box

❖ Resolution

Use this to set the resolution to **[600dpi]** or **[1200dpi]**.

Limitation

❒ When the resolution option is set to **[600dpi]** and gradation option is set to **[Fast]**, the outputs will be printet with 600 × 600dpi.

❒ When the resolution option is set to **[600dpi]** and gradation option is set to **[Standard]**, the outputs will be printet with 1200 × 600dpi.

Windows 95/98/Me	**[Advanced]** on the **[Print Quality]** tab
Windows 2000	**[Printer Features]** on **[Advanced...]** on the **[Paper/Quality]** tab in the Printing Preferences Properties
Windows NT 4.0	**[Printer Features]** on **[Document Options]** on the **[Advanced]** tab
Macintosh	**[Printer Specific Options]** in the print dialog box

❖ Dithering

Use this to set the image rendering mode.

Important

❒ When you use Windows 95/98/Me, you can configure **[Dithering]** in **[Advanced]** by selecting **[Manual]** from the **[Color]** setting. **[Automatic]** sets the printer to "Photographic".

Windows 95/98/Me	**[Advanced]** on the **[Print Quality]** tab
Windows 2000	**[Printer Features]** on **[Advanced...]** on the **[Paper/Quality]** tab in the Printing Preferences Properties
Windows NT 4.0	**[Printer Features]** on **[Document Options]** on the **[Advanced]** tab
Macintosh	**[Printer Specific Options]** in the print dialog box

❖ Gray Reproduction (Black Text/Graphics)

Use this to select the black color mode for text and line art.

Important

❒ When you use Windows 95/98/Me, you can configure **[Gray Reproduction]** in **[Advanced]** by selecting **[Manual]** from the **[Color]** setting. **[Automatic]** sets the printer to "Pure Black Text".

Note

❒ Use this to select **[K]** *1 *2 or **[CMY+K]** *3 .

*1 Select this setting to use a black toner.

*2 When you use Windows 95/98/Me, this mode is called “Pure Black Text”.

*3 Select this setting to use all toners.

Windows 95/98/Me	**[Advanced]** on the **[Print Quality]** tab
Windows 2000	**[Printer Features]** on **[Advanced...]** on the **[Paper/Quality]** tab in the Printing Preferences Properties
Windows NT 4.0	**[Printer Features]** on **[Document Options]** on the **[Advanced]** tab
Macintosh	**[Printer Specific Options]** in the print dialog box

❖ Black Over Print

Select whether or not to apply a black color over any other colors when printing.
This is useful when a white opening in background is noticeable in black text and graphics.

Important

❒ When you use Windows 95/98/Me, you can configure **[Black Over Print]** in **[Advanced]** by selecting **[Manual]** from the **[Color]** setting.

Windows 95/98/Me	**[Advanced]** on the **[Print Quality]** tab
Windows 2000	**[Printer Features]** on **[Advanced...]** on the **[Paper/Quality]** tab in the Printing Preferences Properties
Windows NT 4.0	**[Printer Features]** on **[Document Options]** on the **[Advanced]** tab
Macintosh	**[Printer Specific Options]** in the print dialog box

❖ Paper Source

The following table shows the tabs or menus where you can select this function.

Windows 95/98/Me	**[All Pages]** on the **[Paper]** tab
Windows 2000	**[Paper/Quality]** tab in the Printing Preferences Properties
Windows NT 4.0	**[Page Setup]** tab
Macintosh	**[General]** in the print dialog box

❖ Destination Tray

The following table shows the tabs or menus where you can select this function.

Windows 95/98/Me	**[Destination]** on the **[Paper]** tab
Windows 2000	**[Printer Features]** on **[Advanced...]** on the **[Paper/Quality]** tab in the Printing Preferences Properties
Windows NT 4.0	**[Printer features]** on **[Document Options]** on the **[Advanced]** tab
Macintosh	**[Printer Specific Options]** in the print dialog box

❖ Duplex Printing

Use this function to select duplex printing.

Limitation

❒ To use this function, the Duplex Unit must be installed on the printer.

The following table shows the tabs or menus where you can select this function.

Windows 95/98/Me	**[Duplex]** on the **[Setup]** tab
Windows 2000	**[Print on Both Sides (Duplex)]** on the **[Layout]** tab in the Printing Preferences Properties
Windows NT 4.0	**[Page Setup]** tab
Macintosh	**[Print on Both Sides]** on **[Layout]** in the print dialog box

❖ Collate

Use this function to enable collation. With this feature, the printer can efficiently print collated sets of multiple-page documents.

Limitation

❒ To use this function, a Memory Unit of at least 128MB or Hard Disk Drive must be installed on the printer.

The following table shows the tabs or menus where you can select this function.

Windows 95/98/Me	**[Collate]** on the **[Setup]** tab
Windows 2000	**[Printer Features]** on **[Advanced...]** on the **[Paper/Quality]** tab in the Printing Preferences Properties
Windows NT 4.0	**[Printer Features]** on **[Document Options]** on the **[Advanced]** tab
Macintosh	**[Printer Specific Options]** in the print dialog box

❖ Staple

Use this function to have the output stapled. When you turn Staple on, the printed document is collated automatically. You should switch off Collate from the Print window of your application to prevent the entire job from being stapled together.

Limitation

❒ To use this function, the finisher must be installed on the printer.

Reference

❒ For more information, see the Printer Client Reference 2.

The following table shows the tabs or menus where you can select this function.

Windows 95/98/Me	**[Staple]** on the **[Setup]** tab
Windows 2000 *1	**[Printer Features]** on **[Advanced...]** on the **[Paper/Quality]** tab in the Printing Preferences Properties
Windows NT 4.0 *1	**[Printer features]** on **[Document Options]** on the **[Advanced]** tab
Macintosh *1	**[Printer Specific Options]** in the print dialog box

*1 You must select "Finisher Shift Tray 1" or "Finisher Shift Tray 2" for the destination tray setting.

❖ Punch

Use this function to have the output punched.

Limitation

❒ To use this function, the finisher with punch must be installed on the printer.

Reference

❒ For more information, see the Printer Client Reference 2.

The following table shows the tabs or menus where you can select this function.

Windows 95/98/Me	**[Punch]** on the **[Setup]** tab
Windows 2000 *1	**[Printer Features]** on **[Advanced...]** on the **[Paper/Quality]** tab in the Printing Preferences Properties
Windows NT 4.0 *1	**[Printer features]** on **[Document Options]** on the **[Advanced]** tab
Macintosh *1	**[Printer Specific Options]** in the print dialog box

*1 You must select "Finisher Shift Tray 1" or "Finisher Shift Tray 2" for the destination tray setting.

❖ Toner Saver

Use this function to reduce the amount of toner used when printing.

Note

❒ This will have low toner consumption, so that the output will appear slightly ligter.

The following table shows the tabs or menus where you can select this function.

Windows 95/98/Me	**[Toner Saver]** on the **[Print Quality]** tab
Windows 2000	**[Printer Features]** on **[Advanced...]** on the **[Paper/Quality]** tab in the Printing Preferences Properties
Windows NT 4.0	**[Printer features]** on **[Document Options]** on the **[Advanced]** tab
Macintosh	**[Printer Specific Options]** in the print dialog box

❖ Sample Print

Use this function to print only one set of a multiple print job.
The other sets are saved in the machine. The saved job can be printed from the machine's operation panel. You can also delete the saved job.

Limitation

❒ To use this function, the Hard Disk Drive must be installed on the printer.

Note

❒ The “User ID” can consist of up to eight alphanumeric (a-z, A-Z, 0–9) characters.

❒ Entering the “User ID” helps you to distinguish the print job from others.

The following table shows the tabs or menus where you can select this function.

Windows 95/98/Me	**[Job Type]** on the **[Setup]** tab
Windows 2000	**[Job Type]** on the **[Job/Log]** tab
Windows NT 4.0	**[Job Type]** on the **[Job/Log]** tab
Macintosh	**[Job Log]** in the print dialog box

❖ Locked Print

Use this function to save documents in the machine memory with a password, and then edit and print them as you want.

Limitation

❒ To use this function, the Hard Disk Drive must be installed on the printer.

Note

❒ The “User ID” can consist of up to eight alphanumeric (a-z, A-Z, 0–9) characters. The “Password” must be four digits.

The following table shows the tabs or menus where you can select this function.

Windows 95/98/Me	**[Job Type]** on the **[Setup]** tab
Windows 2000	**[Job Type]** on the **[Job/Log]** tab
Windows NT 4.0	**[Job Type]** on the **[Job/Log]** tab
Macintosh	**[Job Log]** in the print dialog box

Sample Print

Follow the procedures below to print a document using the “Sample Print” function.

The following procedure uses the sample User ID: ABCD1234.

Windows 95/98/Me

Note

- ❒ If the application has a collate option, make sure that it is not selected before sending a print job. By default, sample print jobs are automatically collated by the printer driver. If the collate option is selected in the application print dialog box, more prints than intended may be printed.

1 From an application, select the menu command to print.

The print dialog box appears.

2 Open the Printer Properties.

3 Click to select the [Setup] tab.

4 Select [Sample Print] in the [Job Type].

5 Click the [Details...]

6 Enter the “User ID” in [User ID]. This can consist of up to eight alphanumeric (a-z, A-Z, 0-9) characters.

Note

- ❒ This is used to identify the user associated with a job.
- ❒ The "User ID" can consist of up to eight alphanumeric (a-z, A-Z, 0-9) characters.

7 Click [OK].

8 Click [OK] to close the Printer Properties.

9 Start printing from the application's print dialog box.

The Sample Print job is sent to the machine and one set is printed.

10 Check the sample print to confirm that the settings are all right.

If the settings are fine, go to step 11 to print the remaining sets.

If not, you can delete the saved job. ⇒ p.42 “Deleting a Sample Print file”

11 On the machine's operation panel, press [Menu].

12 Press [▲] or [▼] until the following message appears on the panel display.

```
Menu:
 Sample Print
```

13 Press [Enter #].

The following message appears on the panel display.

```
Sample Print:
08:56 ABCD1234
```

14 Press [▲] or [▼] to display the file you want to print, and then press [Enter #].

15 Press 【▲】 or 【▼】 to display "Print File", and then press 【Enter #】.

The following message appears on the panel display.

```
Qty:  1(1-999)
Press #To Print
```

16 Press 【▲】 or 【▼】 to change the document quantity desired, and then press 【Enter #】 to print the file.

The following message appears on the panel display.

```
Processing...
```

Windows 2000, Windows NT 4.0

Note

- ❒ If the application has a collate option, make sure that it is not selected before sending a print job. By default, sample print jobs are automatically collated by the printer driver. If the collate option is selected in the application print dialog box, more prints than intended may be printed.

1 From an application, select the menu command to print.

The print dialog box appears.

2 Open the Printer Properties.

3 Click to select the [Job/Log] tab.

4 Select [Sample Print] in the [Print Job].

5 Enter the "User ID" in [User ID]. This can consist of up to eight alphanumeric (a-z, A-Z, 0-9) characters.

Note

- ❒ This is used to identify the user associated with a job.
- ❒ The "User ID" can consist of up to eight alphanumeric (a-z, A-Z, 0-9) characters.

6 Click [OK] to close the Printer Properties.

7 Start printing from the application's print dialog box.

The Sample Print job is sent to the machine and one set is printed.

8 Check the sample print to confirm that the settings are all right.

If the settings are fine, go to step 9 to print the remaining sets.

If not, you can delete the saved job. ⇒ p.42 "Deleting a Sample Print file"

9 On the machine's operation panel, press [Menu].

10 Press [▲] or [▼] until the following message appears on the panel display.

```
Menu:
 Sample Print
```

11 Press [Enter #].

The following message appears on the panel display.

```
Sample Print:
08:56 ABCD1234
```

12 Press [▲] or [▼] to display the file you want to print, and then press [Enter #].

13 Press [▲] or [▼] to display "Print File", and then press [Enter #].

The following message appears on the panel display.

```
Qty:  1(1-999)
Press #To Print
```

14 Press [▲] or [▼] to change the document quantity desired, and then press [Enter #] to print the file.

The following message appears on the panel display.

```
Processing...
```

Macintosh

1 From an application, select the menu command to print.

The print dialog box appears.

2 Click to select the [Job Log].

3 Select [Sample Print], and then select the appropriate setting.

4 Enter the "User ID" in [User ID]. This can consist of up to eight alphanumeric (a-z, A-Z, 0-9) characters.

Note

- This is used to identify the user associated with a job.
- The "User ID" can consist of up to eight alphanumeric (a-z, A-Z, 0-9) characters.

5 After making all of the settings you want, click [Print].

The Sample Print job is sent to the machine and one set is printed.

6 Check the sample print to confirm that the settings are all right.

If the settings are fine, go to step 7 to print the remaining sets.

If not, you can delete the saved job. ⇒ p.42 "Deleting a Sample Print file"

7 On the machine's operation panel, press 【Menu】.

8 Press [▲] or [▼] until the following message appears on the panel display.

```
Menu:
 Sample Print
```

9 Press [Enter #].

The following message appears on the panel display.

```
Sample Print:
08:56 ABCD1234
```

10 Press [▲] or [▼] to display the file you want to print, and then press [Enter #].

11 Press [▲] or [▼] to display "Print File", and then press [Enter #].

The following message appears on the panel display.

```
Qty:  1(1-999)
Press #To Print
```

12 Press [▲] or [▼] to change the document quantity desired, and then press [Enter #] to print the file.

The following message appears on the panel display.

```
Printing...
```

Deleting a Sample Print file

If the printed document is not what you expected, you can delete the sample print file.

1. **Press [Menu].**
2. **Press [▲] or [▼] to display "Sample Print", and then press [Enter #].**
3. **Press [▲] or [▼] to display the file you want to delete, and then press [Enter #].**
4. **Press [▲] or [▼] to display “Delete File”, and then press [Enter #].**

   The following message appears on the panel display.

```
08:56 ABCD1234
Press # To Del.
```

5. **Press [Enter #] to delete the file.**

   The following message appears on the panel display.

```
Deleted
```

Locked Print

Follow the procedures below to print a document using the “Locked Print” function.
The following procedure uses the sample User ID: ABCD1234.

Windows 95/98/Me

1. **From an application, select the menu command to print.**
   The print dialog box appears.
2. **Open the Printer Properties.**
3. **Click to select the [Setup] tab.**
4. **Select [Locked Print] in [Job Type].**
5. **Click the [Details...]**
6. **Enter the “User ID” in [User ID]. This can consist of up to eight alphanumeric (a-z, A-Z, 0-9) characters. Then enter a password in [Password], up to four digits.**

   Note
   - ❒ This is used to identify the user associated with a job.
   - ❒ The "User ID" can consist of up to eight alphanumeric (a-z, A-Z, 0-9) characters. The “Password” must be four digits.
7. **Click [OK].**
8. **Click [OK] to apply the settings you made.**

9 After making all of the settings you want, click [OK] to close the Printer Properties.

The document file is saved in the printer.

If you want to print this document, go to step 10 to print the remaining sets.

If not, you can delete the saved job. ⇒ p.52 “Deleting a Locked Print file”

10 On the machine's operation panel, press [Menu].

11 Press [▲] or [▼] until the following message appears on the panel display.

```
Menu:
 Locked Print
```

12 Press [Enter #].

The following message appears on the panel display.

```
Locked Print:
08:56  ABCD1234
```

13 Press [▲] or [▼] to display the file you want to print, and then press [Enter #].

The following message appears on the panel display.

```
Password:
[0---]
```

14 Press [▲] or [▼] to set the digit in the password entry field.

15 Press 【Enter #】.

The pointer (▒) moves to the next entry field automatically.

16 Repeat steps 14 and 15 to set the password.

Check if the pointer (▒) is at the rightmost position, and then press 【Enter #】 to register the password you selected.

17 Press 【▲】 or 【▼】 to display "Print File", and then press 【Enter #】.

The following message appears on the panel display.

```
Qty:  1(1-999)
Press # To Print
```

18 Press 【▲】 or 【▼】 to change the document quantity desired, and then press 【Enter #】 to print the file.

The following message appears on the panel display.

```
Printing...
```

Windows 2000, Windows NT 4.0

1 From an application, select the menu command to print.

The print dialog box appears.

2 Open the Printer Properties.

3 Click to select the [Job/Log] tab.

4 Select [Locked Print] in [Print Job].

5 Enter the "User ID" in [User ID]. This can consist of up to eight alphanumeric (a-z, A-Z, 0-9) characters. Then enter a password in [Password], up to four digits.

Note

- This is used to identify the user associated with a job.
- The "User ID" can consist of up to eight alphanumeric (a-z, A-Z, 0-9) characters. The "Password" must be four digits.

6 Click [OK] to apply the settings you made.

7 After making all of the settings you want, click [OK] to close the Printer Properties.

The document file is saved in the printer.

If you want to print this document, go to step 8 to print the remaining sets.

If not, you can delete the saved job. ⇒ p.52 "Deleting a Locked Print file"

8 On the machine's operation panel, press 【Menu】.

9 Press [▲] or [▼] until the following message appears on the panel display.

```
Menu:
 Locked Print
```

10 Press [Enter #].

The following message appears on the panel display.

```
Locked Print:
08:56  ABCD1234
```

11 Press [▲] or [▼] to display the file you want to print, and then press [Enter #].

The following message appears on the panel display.

```
Password:
[0---]
```

12 Press [▲] or [▼] to set the digit in the password entry field.

13 Press [Enter #].

The pointer (▒) moves to the next entry field automatically.

14 Repeat steps 12 and 13 to set the password.

Check if the pointer (▒) is at the rightmost position, and then press [Enter #] to register the password you selected.

15 Press 【▲】 or 【▼】 to display "Print File", and then press 【Enter #】.

The following message appears on the panel display.

```
Qty:  1(1-999)
Press # To Print
```

16 Press 【▲】 or 【▼】 to change the document quantity desired, and then press 【Enter #】 to print the file.

The following message appears on the panel display.

```
Printing...
```

Macintosh

1 From an application, select the menu command to print.

The print dialog box appears.

2 Click to select the [Job Log].

3 Select [Locked Print],and then select the appropriate setting.

4 Enter the “User ID” in [User ID]. This can consist of up to eight alphanumeric (a-z, A-Z, 0-9) characters. Then enter a password in [Password], up to four digits.

Note

- ❒ This is used to identify the user associated with a job.
- ❒ The "User ID" can consist of up to eight alphanumeric (a-z, A-Z, 0-9) characters. The “Password” must be four digits.

5 After making all of the settings you want, click [Print].

The Sample Print job is sent to the machine and one set is printed.

6 Check the locked print to confirm that the settings are all right.

If the settings are fine, go to step 7 to print the remaining sets.

If not, you can delete the saved job. ⇒ p.52 “Deleting a Locked Print file”

7 On the machine's operation panel, press [Menu].

8 Press [▲] or [▼] until the following message appears on the panel display.

```
Menu:
 Locked Print
```

9 Press 【Enter #】.

The following message appears on the panel display.

```
Locked Print:
08:56  ABCD1234
```

10 Press 【▲】 or 【▼】 to display the file you want to print, and then press 【Enter #】.

The following message appears on the panel display.

```
Password:
[0---]
```

11 Press 【▲】 or 【▼】 to set the digit in the password entry field.

12 Press 【Enter #】.

The pointer (▒) moves to the next entry field automatically.

13 Repeat steps 11 and 12 to set the password.

Check if the pointer (▒) is at the rightmost position, and then press 【Enter #】 to register the password you selected.

14 Press 【▲】 or 【▼】 to display "Print File", and then press 【Enter #】.

The following message appears on the panel display.

```
Qty:  1(1-999)
Press # To Print
```

15 Press 【▲】 or 【▼】 to change the document quantity desired, and then press 【Enter #】 to print the file.

The following message appears on the panel display.

```
Printing...
```

Deleting a Locked Print file

If the printed document is not what you expected, you can delete the Locked print file.

1 Press [Menu].

2 Press [▲] or [▼] to display "Locked Print", and then press [Enter #].

The following message appears on the panel display.

3 Press [▲] or [▼] to display the file you want to delete, and then press [Enter #].

The following message appears on the panel display.

```
Password:
[0---]
```

4 Press [▲] or [▼] to set the digit in the password entry field.

5 Press [Enter #].

The pointer (▒) moves to the next entry field automatically.

6 Repeat steps 4 and 5 to set the password.

Check if the pointer (▒) is at the rightmost position, and then press [Enter #] to register the password you selected.

7 Press [▲] or [▼] to display "Delete File", and then press [Enter #].

The following message appears on the panel display.

```
08:56 ABCD1234
Press # To Del.
```

8 Press 【Enter #】 to delete the file.

The following message appears on the panel display.

```
Deleted
```

Printer Utility for Mac

By using Printer Utility for Mac, you can download fonts, change the name of printer and so on.

Note

- ❒ Printer Utility for Mac is included on the CD-ROM labeled “Drivers and Utilities”.
- ❒ Printer Utility for Mac requires Mac OS 7.6.1 or later.

Installing Printer Utility for Mac

Follow these steps to install Printer Utility for Mac on the machine.

1. **Start the Macintosh.**
2. **Insert the CD-ROM into the CD-ROM drive.**
   The icon of the CD-ROM appears.
3. **Double-click the icon of hard disk to open it.**
4. **Double-click the CD-ROM icon.**
   The contents of the CD-ROM appear.
5. **Double-click the [PS Utility] folder of the CD-ROM, and then drag the [Printer Utility for Mac] file and drop it into the Macintosh hard disk.**
6. **Drag the CD-ROM icon and drop it into [Trash] to eject the CD-ROM.**
   Printer Utility for Mac is installed.

Starting Printer Utility for Mac

The following instructions describe how to start Printer Utility for Mac.

Important

- ❒ Before starting Printer Utility for Mac, confirm that the printer is selected with **[Chooser]** on the Apple menu.

1 Double-click the icon of Printer Utility for Mac.

The Printer Utility for Mac dialog box appears.

2 Click [OK].

Printer Utility for Mac will take a few seconds to start.

Reference

- ❒ For more information, see "Printer Utility for Mac Functions".

Printer Utility for Mac Functions

Printer Utility for Mac functions are described below.

❖ File menu

- **[Download PS Fonts...]**
  Download fonts (PostScript Type 1) to the printer. See p.57 "Downloading PS Fonts".
- **[Display Printer's Fonts...]**
  Display and delete the fonts in printer memory and the printer's hard disk drive. See p.58 "Displaying Printer's Fonts".
- **[Initialize Printer's Disk...]**
  Initialize the printer's hard disk drive. See p.60 "Initializing the Printer Disk".

- **[Page Setup...]**
  Set up the paper size to print “Printer Font Catalog” and “Printer Font Sample”. See p.61 “Page Setup”.
- **[Print Font Catalog...]**
  Print the names of available fonts. See p.61 “Printing Font Catalog”.
- **[Print Font Sample...]**
  Print a sample of fonts. See p.61 “Printing Font Sample”.
- **[Rename Printer...]**
  Change the printer's name when viewed via Appletalk. See p.62 “Renaming the Printer”.
- **[Restart Printer]**
  Restart the printer. See p.63 “Restarting the Printer”.

❖ Utility menu

- **[Download PostScript File...]**
  Download a PostScript File. See p.63 “Downloading PostScript Files”.
- **[Select Zone...]**
  Change the zone the printer belongs to via Appletalk. See p.64 “Selecting the Zone”.
- **[Display Printer Status...]**
  Display the status of the printer. See p.65 “Displaying the Printer Status”.
- **[Launch Dialogue Console...]**
  Create and edit a PostScript file, and download it to the printer. See p.65 “Launching the Dialogue Console”.

Downloading PS Fonts

You can download the PS fonts to the printer's memory or hard disk drive.

Important

- ❒ The following procedures to download the fonts assumes that you are a system administrator. If you are not, be sure to consult your system administrator.
- ❒ If the printer restarts, all the printer settings return to their defaults.
- ❒ Confirm that Macintosh and the printer are connected with Appletalk.

Note

- ❒ Some fonts cannot be downloaded.
- ❒ Before downloading, read the documentation of the fonts you want to use.

1 Select [Download PS Fonts...] on the [File] menu.

2 Click [Add to list].

The dialog box to select fonts appears.

3 Click to select the desired font files, and then click [Open].

The list of selectable font names appears.

4 After adding all the fonts you want to download, click [OK].

The dialog box of selected fonts to download appears.

5 **Click [Download].**

The fonts begin to download, and the download status is shown.

Important

- ❒ During the download, do not turn off the power switch, operate the panel or open or close the cover.

6 **When the completion message appears, click [OK].**

7 **Click [Cancel].**

Displaying Printer's Fonts

You can display the available fonts currently downloaded to the printer. Fonts in the printer's memory and hard disk drive can be displayed.

Note

- ❒ The fonts displayed in italics are the default fonts.

1 **Select [Display Printer's Fonts...] on the [File] menu.**

A dialog box appears.

2 **Select [Printer's memory] or [Printer's disk].**

3 **Click [OK].**

Deleting Fonts

You can delete fonts from the printer's memory or hard disk drive.

1 Select [Display Printer's fonts] on the [File] menu.

A dialog box appears.

2 Select the [Printer's memory] or [Printer's disk].

3 Select the fonts you want to delete.

Limitation

- ❒ You cannot delete the fonts displayed in italic.

4 Click [Delete].

A confirmation message appears.

5 Confirm the fonts you want to delete and the printer name from which you want to delete the fonts.

6 Click [Continue], and then click [OK].

7 Click [OK].

Initializing the Printer Disk

When initializing the printer's hard disk, all the fonts downloaded to the printer's hard disk drive and deleted. Before initializing, be sure to check the fonts on the hard disk drive.

Important

- ❒ When initializing the printer's hard disk drive from the operation panel, all of the data on the printer's hard disk drive is deleted. Before initializing, be sure to check the data on the hard disk drive.

1 Select [Initialize Printer's Disk...] on the [File] menu.

The confirmation message appears.

Note

- ❒ To cancel initialization, click **[Cancel]**.

2 Click [Execute].

Initializing starts.

Important

- ❒ Do not turn off the power switch until initializing is completed, otherwise the hard disk drive might be damaged.

3 When the completion message appears, click [OK].

Page Setup

You can set the paper size on which to print “Print Fonts Catalogue” and “Prints Fonts Sample”.

1 Select [Page Setup...] on the [File] menu.

2 Choose the paper size.

Printing Font Catalog

Print the names of fonts available on the printer.

Note

❒ The paper selected under **[Page Setup]** is used.

1 Select [Print Fonts Catalogue] on the [File] menu.

2 Click [Print].

Printing Font Sample

You can print samples of fonts downloaded to the hard disk drive or memory.

Note

❒ Print by using the paper selected on **[Page Setup]**.

1 Select [Print Fonts Sample...] on the [File] menu.

2 Click [Print].

Renaming the Printer

You can change the printer's name displayed under Appletalk. If you connect several printers on the network, assign different names so you can identify them. If several printers have the same name, a digit appears next to the printer name in the **[Chooser]**.

1 Select [Rename Printer...] on the [File] menu.

2 Type a new name in the [New Name:] field.

Limitation

- ❒ You can enter up to 31 digits and letters.
- ❒ Do not use symbols, for example “*”, “:”, “=”,”@”, “~”.

3 Click [Rename].

The printer name is changed.

4 Press [OK].

5 Select [Chooser] on the Apple menu.

6 Click the icon of [AdobePS].

7 Click to select the printer name renamed in step 2 and then close [Chooser].

Note

- ❒ If there are several Appletalk zone, select the zone the printer belongs to.

Restarting the Printer

You can restart the printer.

1 Select [Restart Printer] on the [File] menu.

2 Confirm the message that appears on the screen, and then click [Restart].

The printer restarts.

Note

- ❒ The fonts that you downloaded in the printer's memory will be deleted.
- ❒ If the printer restarts, all the printer settings return to their defaults.

Downloading PostScript Files

You can download a Postscript file to the printer.

1 Select [Download PostScript File...] on the [Utility] menu.

2 Select the file name to download and click the file name, and then click [Open].

3 Type the log file name, and then click [Save].

The selected file is downloaded.

Note

- ❒ Errors are recorded in the log file.

Selecting the Zone

You can change the zone to which the printer belongs under Appletalk.

Important

- ❒ Confirm that the printer and a Macintosh are connected in an Appletalk environment.

1 Select [Select Zone...] on the [Utility] menu.

The zone to which the printer belongs and the available zone list appear.

2 Select the zone to which you want to switch the printer, and then click [Change].

A confirmation message appears.

3 Click [Continue].

A confirmation message appears.

4 Press [OK].

5 Select [Chooser] on the Apple menu.

6 Click the [AdobePS] icon.

7 Select the zone selected in step 2 on the [Appletalk zone:].

8 Click to select the printer you want to use on the [Select a PostScript Printer:].

9 Close [Chooser].

Displaying the Printer Status

You can display and confirm the current status of the printer.

1 Select [Display Printer Status...] on the [Utility] menu.

The current status of the printer appears.

2 Confirm the current status of the printer.

You can confirm the memory capacity, the VM (Virtual Memory) space, the hard disk drive status and available space on the hard disk drive. You can also confirm the zone to which the printer belongs to.

3 Click [OK].

Launching the Dialogue Console

You can create and edit a PostScript file for printing, and download it to the printer.

Important

- ❒ "Launch Dialogue Console" is recommended for users with an understanding of PostScript.
- ❒ Do not download any file other than PostScript files to the printer.
- ❒ "Launch Dialogue Console" must be used at your own responsibility.

1 Select [Launch Dialogue Console...] on the [Utility] menu.

Open the editing screen. The Dialogue Console menu bar appears.

2 Type the PostScript command in the editor screen.

Note

- ❒ To edit a PostScript file, select **[Open]** on the **[File]** menu to open it.
- ❒ You can search or replace a character string by using the **[Search]** menu.

3 After editing the PostScript file, select [Download Top Window] on the [Console] menu to start printing.

The PostScript file is sent to the printer.

Note

- ❒ The **[Reply from Printer]** box opens, depending on the PostScript file you sent.

4 Select [Return To Main Menu] on the [Console] menu to close the PostScript file.

INDEX

B

Black Over Print, 28
Black Text/Graphics, 27

C

Collate, 30
Color Mode, 22
Color Profile, 24
Color Setting, 22

D

Deleting
Locked Print, 52
Sample Print, 42
Deleting Fonts, 59
Destination Tray, 29
Displaying Printer's Fonts, 58
Displaying the Printer Status, 65
Dithering, 26
Document Printing, 22
Downloading PostScript Files, 63
Downloading PS Fonts, 57
Duplex Printing, 29

F

Functions
Printer Utility for Mac, 55

G

Gradation, 25
Gray Reproduction, 27

I

Initializing Printer Disk, 60
Installing, 54
Printer Utility for Mac, 54

L

Launching the Dialogue Console, 65
Locked Print, 34
Deleting, 52
Macintosh, 49
Windows 2000, 46
Windows 95/98/Me, 43
Windows NT 4.0, 46

M

Macintosh
ColorSync, installing, 16
Locked Print, 49
Sample Print, 40

P

PageMaker 6.0 or 6.5, 13
Page Setup, 61
Paper Source, 28
PostScript
Macintosh, *Install*, 14
Windows 2000, *install*, 7
Windows 2000, *uninstalling*, 19
Windows 95/98/Me, *install*, 4
Windows 95/98/Me, *uninstalling*, 18
Windows NT 4.0, *install*, 10
Windows NT 4.0, *uninstalling*, 20
PostScript printer driver, 4
Printer Utility for Mac, 54
Functions, 55
Printing Font Catalog, 61
Printing Font Sample, 61
Punch, 32

R

Renaming the Printer, 62
Resolution, 25
Restarting the Printer, 63

S

Sample Print, 33
Deleting, 42
Macintosh, 40
Windows 2000, 38
Windows 95/98/Me, 35
Windows NT 4.0, 38
Selecting the Zone, 64
Staple, 31

T

Toner Saver, 32

W

Windows 2000
Locked Print, 46
PostScript, *Install*, 7
PostScript, *uninstalling*, 19
Sample Print, 38
Windows 95/98/Me
Locked Print, 43
PostScript, *Install*, 4
PostScript, *uninstalling*, 18
Sample Print, 35
Windows NT 4.0
Locked Print, 46
PostScript, *Install*, 10
PostScript, *uninstalling*, 20
Sample Print, 38

Copyright © 2001

UE USA
EE GB
AE AE G060-6862A

Introduction **2**

How to Read This Manual **3**

1. UNIX Configuration

Before Setup **5**
Using the lp/lpr commands 5
Using the rsh/rcp/ftp commands 5

Using the Installation Shell Script **6**
Assigning the IP Address 6
Executing the Installation Shell Script 8
After Executing Install Shell 13

Printing Method **20**
Printing with lpr, lp 20
Printing with rsh, rcp, ftp 21

Printer Status **25**
Viewing the Print Job Status with lpq and lpstat 25
Viewing the Printer Status with rsh and ftp 26
Copying Information to a File 27

INDEX **28**

Introduction

To get maximum versatility from this machine all operators should carefully read and follow the instructions in this manual. Please keep this manual in a handy place near the machine.

Please read the Safety Information before using this machine. It contains important information related to USER SAFETY and PREVENTING EQUIPMENT PROBLEMS.

Important

Parts of this manual are subject to change without prior notice. In no event will the company be liable for direct, indirect, special, incidental, or consequential damages as a result of handling or operating the machine.

Trademarks

PostScript is a registered trademark of Adobe Systems, Incorporated.

Sun, SunOS and Solaris are trademarks or registered trademarks of Sun Microsystems, Inc. in the United States and other countries.

HP-UX is a registered trademark of Hewlett-Packard Company.

LINUX is a trademark of Linus Torvalds.

RED HAT is a registered trademark of Red Hat, Inc.

Other product names used herein are for identification purposes only and might be trademarks of their respective companies. We disclaim any and all rights in those marks.

Symbols

In this manual, the following symbols are used:

⚠ *WARNING:*

This symbol indicates a potentially hazardous situation which, if instructions are not followed, could result in death or serious injury.

⚠ *CAUTION:*

This symbol indicates a potentially hazardous situation which, if instructions are not followed, may result in minor or moderate injury or damage to property.

* The statements above are notes for your safety.

Important

If this instruction is not followed, paper might be misfeed, originals might be damaged, or data might be lost. Be sure to read this.

Preparation

This symbol indicates the prior knowledge or preparations required before operating.

Note

This symbol indicates precautions for operation, or actions to take after misoperation.

Limitation

This symbol indicates numerical limits, functions that cannot be used together, or conditions in which a particular function cannot be used.

Reference

This symbol indicates a reference.

[ ]

Keys that appear on the machine's panel display.

Keys and buttons that appear on the computer's display.

【 】

Keys built into the machine's operation panel.

Keys on the computer's keyboard.

1. UNIX Configuration

This section explains how to set up a network printer and check the print status using UNIX.

Limitation

- ❒ To print from a UNIX workstation, use the file that the printer supports.

Before Setup

Setting up can vary depending on the printing commands. Please make sure to make the settings accordingly.

Using the lp/lpr commands

1 Use the Installation Shell Script to register the printer host name and the IP address.

2 Start printing.

⇒ P.20 *"Printing Method"*

Using the rsh/rcp/ftp commands

1 Edit the host file to register the Printer host name and the IP address.

2 Start printing.

⇒ P.20 *"Printing Method"*

Reference

- ❒ See P.13 *"After Executing Install Shell"* for host file editing.

Note

- ❒ If you cannot edit the host file, use the install shell script to register the host name.

Using the Installation Shell Script

The installation shell script helps with the setup process. The installation shell script automates some of the tasks in configuring /etc/hosts, /etc/printcap, and in creating the spool directory for BSD UNIX, and in running lpadmin command for System V UNIX.

Preparation

❒ The installation shell script can be used on the following three kinds of workstations. This installation shell script cannot be used with other types of workstations.

- Solaris 2.5.1, 2.6, 7, 8
- HP-UX 8.x, 9.x, 10.x, 11.0
- Red Hat Linux 6.x, 7

❒ When you use NIS (Network Information Service) or DNS, you should configure the server before running this installation shell script.

❒ For more information about the configuration utility of your OS, see the manual that came with the utility.

Assigning the IP Address

Preparation

❒ Configure the machine to use the TCP/IP protocol.

- Make sure that the TCP/IP protocol on the machine is set to active. (The default is active.)
- Assign an IP address to the machine and configure the other settings required for using the TCP/IP protocol.

Reference

❒ For more information about how to make the above settings, see the Administrator Reference 2.

Checking the IP address configuration

Follow the procedure below to make sure that the IP address has been configured correctly.

- The following procedure uses the sample IP address: 192.168.15.16.

1 **Enter the following:**

```
# ping 192.168.15.16
```

If the address has been configured correctly, the following message appears.

```
192.168.15.16 is alive
```

If the address has been configured incorrectly, the following message appears.

```
no answer from 192.168.15.16
```

Note

❒ When you use NIS, the IP address and host name are written to /etc/hosts on the master server. When you use DNS, the information is written to a data file on the name server. After writing the host name and IP address to the file, make sure that the configuration is correct by pinging the host name.

```
# ping host_name
```

❒ If the host name is registered with an IP address, the server can access the printer using its host name instead of its IP address.

Executing the Installation Shell Script

After having configured the printer IP address, follow the procedure below to execute the installation shell script and set up the workstation printing environment.

Preparation

- ❒ Before executing the installation shell script, the IP address, the host name and the printer name are required.
- ❒ Following procedures use sample IP address: 192.168.15.16, sample host name: nphost and sample printer name: np.

Note

- ❒ Use ftp to get the installation shell script from the printer.

1 Log on to the workstation as root account.

Note

- ❒ If you do not log on as root, the installation shell script will not run.

2 Get the installation shell script from the printer.

❶ **Move to the directory you want to copy the installation shell script to.**

❷ **Use ftp to connect to the printer with the IP address that you just configured.**

```
# ftp 192.168.15.16
Connected to 192.168.15.16
220 printer FTP server ready.
name (192.168.15.16:root:)
```

❸ **When a user name is requested, leave blank and press the【RETURN】key.**

```
331 Password required for root.
Password:
```

❹ **When a password is requested, leave blank and press the【RETURN】key.**

```
230 User root logged in.
ftp>
```

❺ **Type the following to get the installation shell script.**

```
ftp> get install
```

❻ **Close the ftp session.**

```
ftp> bye
221 Goodbye.
#
```

3 **Run the installation shell script.**

```
# sh ./install
```

Note

❒ Insert a period and slash before the current directory.

4 **Enter a number to select the workstation OS that you are using.**

```
Network printer install shell
 Copyright RICOH CO.,LTD. 1994-2000
 Select your workstation OS type.
  1. SunOS 4.x.x
  2. Solaris 2.x, Solaris 7-8 (SunOS5.x)
  3. HP-UX 8.x,9.x,10.x,11.x
  4. UnixWare
  5. Linux
  6. other
Enter <1-6>:
2
```

Note

- ❒ SunOS and UnixWare appear on the screen, but they are not supported. Use Solaris, HP-UX or Linux.
- ❒ If you select “6”, the installation shell script exits.

5 **Enter the IP address of the printer.**

```
Enter Printer host IP address <xxx.xxx.xxx.xxx> [return=skip]:
192.168.15.16
```

Note

- ❒ The IP address will be added to the /etc/hosts file.
- ❒ If the host name of the printer has already been configured, press the 【RETURN】 key. Nothing will be added to the /etc/hosts file.

6 **Enter the host name of the printer.**

```
Enter Printer host name : nphost
```

Note

- ❒ The host name will be added to the /etc/hosts file.
- ❒ If no IP address was entered in step 5, nothing is added to the /etc/hosts file.

7 **Configure the printer name.**

```
Enter logical printer name [default nphost_prn]
```

If you want to use the default name, press the 【RETURN】 key. Enter a new name, if you want to use a different one.

Note

- ❒ The host name entered in step 6 followed by “_prn” appears in “default”.

8 Set the print option.

```
Enter remote printer name [default lp]:
```

- Press the **[RETURN]** key, print with PCL or PostScript is enabled.
- If you enter “text”, text printing is enabled.
  If you enter “text”, printing with PCL and PostScript is unavailable.

```
Enter remote printer name [default lp]:text
```

Limitation

❒ You can enter up to 14 characters for HP-UX 11.0, 256 for Solaris 8, and 51 for Red Hat Linux 6.2.

❒ When printing with the lp command, use (_) instead of (=) and (;) instead of (,) for operating systems that cannot use (=) and (,) such as Solaris 2.5 or later.

After the setup with the installation shell script is complete, and if you enter the IP address in step 5, the following message appears.

```
hosts file is modified
```

9 Perform a test print to make sure that the settings are correct.

```
# lpr -Pnp file_name
# lp -d np file_name
```

For more information about lpr and lp, see P.20 *“Printing Method”*.

Deleting the printer

To print using the lp or lpr command, the option specified when the installation shell script is executed is used. Change the option in accordance with the workstation you are using.

❖ BSD UNIX workstation, Linux

Delete the printer entry from /etc/printcap, then execute the installation shell script again. Select options during the setup process.
Or, search the printer entry from /etc/printcap, and change its rp capability to option setting.

❖ Solaris, HP-UX

Delete the printer entry, and then execute the installation shell script again. Select options during the setup process. To delete the printer entry, follow the procedure below.

① Stop the scheduler.

```
# /usr/sbin/lpshut
```

② Delete the printer.

```
# /usr/sbin/lpadmin -x printer_name
```

③ Restart the scheduler.

```
# /usr/lib/lpsched
```

After Executing Install Shell

The printing environment is set up automatically when the installation shell script is executed.

This section describes the set up contents when the installation shell script is executed under Red Hat Linux, Solaris and HP-UX.

Linux

❖ Adding the IP address and host name to the /etc/hosts file

The following line is added to the /etc/hosts file. The IP address and printer host name which you previously entered in the installation script will be used.

`192.168.15.16 nphost # Network Printer`

- **192.168.15.16** is the IP address, **nphost** is the host name, from # to the end of the line is a comment.

Note

❒ The /etc/hosts file contains a list of the IP addresses and host names of all of the hosts communicating on the network. Each entry is delimited with a space or a tab, and each line is separated with a return.

❒ If you do not use NIS or DNS, you must manually enter the IP address and host name of each workstation using the network printer in the /etc/hosts file.

❖ Adding an entry to the /etc/printcap file

The following entry is added to the /etc/printcap file, which is the configuration for printing with the lpr command. In order to use the lpr command to print, you need to edit the /etc/hosts file, add an entry for the network printer to the /etc/printcap file and create a spool directory.

```
##PRINTTOOL3## REMOTE
np|Network Printer:\
        :rm=nphost:\
        :rp=option:\
        :sd=/var/spool/lpd/npd:\
        :lf=/var/log/npd-errs:\
        :sh:\
        :mx#0:
```

Note

- ❒ The /etc/printcap file is used to register the name and attributes of a printer. You must make an entry for the network printer in the /etc/printcap file of all workstations using the network printer.
- ❒ Each entry is separated with colons into several fields. The syntax is to begin each entry with a colon, followed by the entry, and then end with a colon, a back slash, and then a return.
- ❒ The first line of the field is the name of the printer. You use this name when logging on to a network printer from a workstation. You can define several different names by separating each name with the “|” character.
- ❒ The second and following lines contain the printer's attributes. Attributes of the printer are represented by two character names referred to as capabilities. For more information about capabilities, see the following table.

Capability	Explanation	Value Required for the Network Printer.
rm	Host name of the printer	The host name that was registered with the /etc/hosts file.
sd	Path name of the spool directory.	Path name of the spool directory that is to be created.
lf	Path name of the log file.	Path name of the log file. For example /var/log/lpd-errs.
mx	Maximum file size which the directory can copy. When set to 0, the size is unlimited. If nothing is entered, the size is set to 1024 k.	None or something suitable.

❖ Making the spool directory

Create a spool directory under /var/spool/lpd. The name of the spool directory should be the name of the printer followed by a “d”.

Note

- ❒ The spool directory is used to control the data used for a print job. For example, when a print job is created, a temporary copy of the file data used for printing is created in the spool directory. All workstations accessing the network printer need to have a spool directory for the network printer.
- ❒ A spool directory should be made for every network printer entry listed in the /etc/printcap file.
- ❒ The spool directory should normally be made under /var/spool/lpd and the name should match that listed under the sd capability in /etc/printcap. Change the owner and group of the directory to root and lp. The following examples show how to make a /var/spool/lpd/npd spool directory.

```
# cd /var/spool/lpd
# mkdir npd
# chown root npd
# chgrp lp npd
```

❖ Making the log file

Error messages are logged to a file created in the /var/log directory. The log file name is the printer name followed by “d-errs”.

Note

- ❒ The log file is used for logging some errors or warning messages by the UNIX workstation.
- ❒ The log file should be made for every network printer entry listed in the /etc/printcap file.
- ❒ The log file should normally be made under /var/log directory and the name should match that listed under the lf capability in /etc/printcap. Change the owner and group of the log file to root and lp.The following examples show how to make a /var/log/npd-errs file.

```
# cd /var/log
# touch npd-errs
# chown root npd-errs
# chgrp lp npd-errs
```

Solaris

❖ Adding the IP address and host name to the /etc/hosts file

The following line is added to the /etc/hosts file.The IP address and printer host name which you previously entered in the installation script will be used.

192.168.15.16 *nphost* # Network Printer

- **192.168.15.16** is the IP address, **nphost** is the host name, from # to the end of the line is a comment.

Note

- ❒ The /etc/hosts file contains a list of the IP addresses and their host names of all of the hosts communicating on the network. Each entry is delimited with a space or a tab, and each line is separated with a return.
- ❒ If you do not use NIS or DNS, you must manually enter the IP address and host name of each workstation using the network printer in the /etc/hosts file.

❖ Registering the printer

The installation shell script registers the printer as a remote printer.

① If your workstation is Solaris 2.5.1, register the print server and print client to the print service.

```
# lpsystem -t bsd -R 0 -y ”Network Printer” nphost
```

② Register the printer as a remote printer.

```
# lpadmin -p np -s nphost!"option" -T dump -I any
```

- **np** is the printer name, **nphost** is the host name.
  “lp” will be assigned, if the device option is not used.
  When printing with the lp command, use (_) instead of (=) and (;) instead of (,) for operating systems that cannot use (=) and (,) such as Solaris 2.5 or later.

③ If your workstation is Solaris 2.5.1, set the print job to active so that it can be accepted by the print queue.

```
/usr/lib/accept np
```

④ If your workstation is Solaris 2.5.1, set the print job to active to print.

```
/usr/lib/enable np
```

HP-UX

❖ Adding the IP address and host name to the /etc/hosts file

The following line is added to the /etc/hosts file. The IP address and printer host name which you previously entered in the installation script will be used.

192.168.15.16 *np* # Network Printer

- **192.168.15.16** is the IP address, **np** is the host name, from # to the end of the line is a comment.

Note

❒ The /etc/hosts file contains a list of the IP addresses and their host names of all of the hosts communicating on the network. Each entry is delimited with a space or a tab, and each line is separated with a return.

❒ If you do not use NIS or DNS, you must manually enter the IP address and host name of each workstation using the network printer in the /etc/hosts file.

❖ Registering the printer

The installation shell script registers the printer as a remote printer following the procedure below.

① Stop the scheduler.

/usr/lib/lpshut

② Register the printer.

/usr/lib/lpadmin -P*np* -v/dev/null -mrmodel
-orm*nphost* -orp*"option"* -ob3

- **np** is the printer name, **nphost** is the host name.
  "lp" will be assigned, if the Device option is not used.

③ Set the printer so that the print job is listed in the print queue.

/usr/lib/accept *np*

④ Set the printer to perform the print job.

/usr/lib/enable *np*

⑤ Restart the scheduler.

/usr/lib/lpsched

Printing Method

Printing with lpr, lp

Execute one of the following commands according to the type of workstation being used:

❖ BSD UNIX workstation, Linux

% lpr -P*printer_name file_name* [*file_name...*]

For example:

printer name is np, file names are file1 and file2

% lpr -Pnp file1 file2

❖ Solaris, HP-UX

% lp -d *printer_name file_name* [*file_name...*]

For example:

printer name is np, file names are file1 and file2

% lp -d np file1 file2

Note

- ❒ "**printer_name**" is the name that was entered when executing the installation shell script.
- ❒ You can use wild cards (* or ?) for the file name.

Printing with rsh, rcp, ftp

You can also print using the rsh, rcp and ftp commands.

Note

- ❒ Print using the format that the printer can support.
- ❒ The message “print session full” appears when the maximum number of print requests has been reached (max. 5 session) . You should try to print again when the number of requests is less than five. You can check the number of print requests using telnet. For more information about using telnet, see the Administrator Reference 2.

rsh

```
% rsh host_name print < file_name
```

For example:

host name is nphost, file name is file1

```
% rsh nphost print < file1
```

Note

- ❒ “**host_name**” is the name entered when executing the installation shell script.
- ❒ If you use a HP-UX, use the remsh command instead of rsh.

rcp

❖ To specify and print the file

% rcp *file_name* [*file_name...*] *host_name*:

For example:

host name is nphost, file names are file1 and file2

% rcp file1 file2 nphost:

❖ To print all of the files in a directory

% rcp -r *directory_name host_name*:

For example:

host name is nphost, directory name is directory1

% rcp -r directory1 nphost:

Note

- ❒ "**host_name**" is the name entered when executing the installation shell script.
- ❒ You can use wild cards (* or ?) for the file name.

ftp

Depending on the number of files to be printed, use the put or mput commands.

Limitation

❒ File names cannot contain “=” or “,”.

❖ To print one file

```
ftp> put file_name
```

❖ To print several files

```
ftp> mput file_name [file_name...]
```

Note

❒ You can use wild cards (* or ?) for the file name with the mput command.

The following procedure shows an example of how to print a file using ftp.

1 Start ftp using the IP address or host name of the printer.

```
% ftp IP_address
```

Note

❒ “**host_name**” is the name entered when executing the installation shell script.

2 Enter the user name. Skip the password, and then press the 【RETURN】 key.

```
Name:
Password:
```

3 **Set the file transfer mode to binary.**

```
ftp> bin
```

Note

- ❒ If the file transfer mode is not set to binary, the image might not be printed correctly.

4 **Print the file.**

Note

- ❒ For example, to print one file named file1:

```
ftp> put file1
```

- ❒ For example, to print two files named file1 and file2:

```
ftp> mput file1 file2
```

5 **Exit ftp.**

```
ftp> bye
```

Printer Status

You can use the following commands to have information and the printer status displayed or copied to a file.

Use the lpq or lpstat command to display the status of the printer or information about print jobs.

Use the rsh, rcp or ftp commands to get more detailed information from the printer.

Viewing the Print Job Status with lpq and lpstat

❖ BSD UNIX workstation, Linux

% lpq -P*printer_name*

For example: Printer name is np

% lpq -P*np*

❖ System V UNIX, Solaris, HP-UX

% lpstat -o *printer_name*

For example: Printer name is np

% lpstat -o *np*

Note

❒ In case of HP-UX, do not put a space between “-o” and “printer name”.

Viewing the Printer Status with rsh and ftp

Use the rsh or ftp command to display the status of the printer or information about print jobs using specified parameters.

You can use these commands for BSD and System V UNIX.

Note

- ❒ If your workstation is HP-UX, use the remsh command instead of the rsh.

```
% rsh host_name parameter
```

```
% ftp host_name
User user_name
password:
ftp> get parameter -
```

Note

- ❒ Leave the user name and password blank, and then press the 【RETURN】 key.
- ❒ " - " indicates the standard output. It will be displayed on screen if the standard output has not been specified.

Parameters that can be used with rsh, rcp and ftp:

Parameter	Information returned
stat	Status of the printer. Information about print jobs.
info	Information about the paper tray, output tray and printer language.
prnlog	Record of the last 16 jobs printed.
syslog	Record of messages about the Network Interface Board.

Copying Information to a File

Use the rcp or ftp command to copy information about the specified parameters to a file.

You can use these commands for BSD and System V UNIX.

Note

❒ The same parameters are used as those above.

```
% rcp host_name:parameter file_name
```

```
% ftp host_name
User: user_name
password:
ftp> get parameter file_name
```

Note

❒ Leave the user name and password blank, and then press the 【RETURN】 key.

B

BSD UNIX workstation, Linux
Deleting the printer, 12
Printer Status, 25
Printing Method, 20

C

configuration
UNIX, 5

D

Deleting the printer, 12

F

ftp
Printing, 23

I

installation shell script, 6

P

Printer Status, 25
Printing Method, 20
Printing with lpr, lp, 20
Printing with rsh, rcp, ftp, 21

R

rcp
Printing, 22
rsh
Printing, 21

S

Solaris, HP-UX
Deleting the printer, 12
Printing Method, 20
System V UNIX, Solaris, HP-UX
Printer Status, 25

U

UNIX, 5

Copyright © 2001