Operating Instructions

Maintenance Guide Copier System Edition

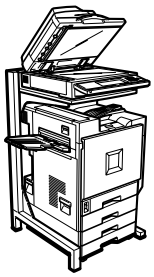

1 Replacing Consumables and Maintenance Kit

2 Cleaning and Adjusting the Printer

3 Originals

4 Paper and Other Media

5 Troubleshooting

6 Appendix

For safe and correct use of this machine, please be sure to read the Safety Information in the Setup Guide Copier System Edition before you use it.

Introduction

This manual contains detailed instructions on the operation and maintenance of this machine. To get maximum versatility from this machine all operators should carefully read and follow the instructions in this manual. Please keep this manual in a handy place near the machine.

Trademarks

Microsoft, Windows, and Windows NT are registered trademarks of Microsoft@ Corporation in the United States and/or other countries.

Other product names used herein are for identification purposes only and might be trademarks of their respective companies. We disclaim any and all rights involved with those marks.

Notes:

Some illustrations in this manual might be slightly different from the machine.

Certain options might not be available in some countries. For details, please contact your sales or service representative.

Note

The proper names of the Windows operating systems are as follows:

- The product name of Windows® 95 is Microsoft® Windows® 95.
- The product name of Windows® 98 is Microsoft® Windows® 98.
- The product name of Windows® Me is Microsoft® Windows® Millennium Edition (Windows Me).
- The product names of Windows® 2000 are as follows:
  Microsoft® Windows® 2000 Advanced Server
  Microsoft® Windows® 2000 Server
  Microsoft® Windows® 2000 Professional
- The product names of Windows® XP are as follows:
  Microsoft® Windows® XP Professional
  Microsoft® Windows® XP Home Edition
- The product names of Windows NT ® 4.0 are as follows:
  Microsoft® Windows NT® Server 4.0
  Microsoft® Windows NT® Workstation 4.0

TABLE OF CONTENTS

Trademarks i

1. Replacing Consumables and Maintenance Kit

Using the Screwdriver 1
Replacing the Toner Cartridge 2
Detaching the SR770 (2 Tray Finisher) 5
Detaching the PT460 (Multi-bin) 6
Opening and Closing the Duplex Reversal Unit 7
Replacing the Fusing Oil Unit 8
Replacing the Photoconductor Unit 12
Replacing the Development Unit 16
Replacing the Fusing Unit 20
Replacing the Dustproof Filter 23
Replacing the Used Toner Bottle 25
Replacing the Paper Feed Rollers 27

2. Cleaning and Adjusting the Printer

Cautions to Take When Cleaning 31
Cleaning the Registration Roller 32
Cleaning the DustProof Glass 33
Cleaning the Exposure Glass 34
Cleaning the Exposure Glass 34
Cleaning the Cover 35
Cleaning the machine 35
Adjusting the Color Registration 36
Auto Adjustment 36
Adjusting the Fuser for Thick Paper 37
Test Sheet Samples 38
Adjusting the Color Calibration 39
Auto Color Calibration 39
Verifying the Test Pattern Sheet 41
Restoring Previous Color Calibration Settings 42
Adjusting Tray Registration 44

3. Originals

Sizes and Weights of Recommended Originals 47
Non-recommended originals for the document feeder 48
Sizes Detectable by the Auto Paper Select 49
Sizes difficult to detect 49
Missing Image Area 50

4. Paper and Other Media

Paper and Other Supported Media **51**
Paper Sizes 51
Paper Recommendations **57**
Loading Paper 57
Storing Paper 57
Types of Paper and Other Media 57
Printable Area **61**
Loading Paper **62**
Loading Paper in Tray 1 62
Loading Paper in Tray 2 and the Optional Paper Feed Unit 63
Loading paper in Paper Bank PS470 (2000-sheet Large Capacity Tray) 64
If you load a paper size that is not selected automatically 65
Changing the paper type 66
Loading Paper in the Bypass Tray 67

5. Troubleshooting

Error & Status Messages on the Control Panel **73**
Printer Does Not Print **83**
Other Printing Problems **86**
Removing Misfed Paper **90**
Detaching the 2 Tray Finisher 90
Detaching the PT460 (Multi-bin) 91
Opening and Closing the Duplex Reversal Unit 92
When “Remove Misfeed A: Internal Path” Appears 93
When “Remove Misfeed B: Fusing Unit” Appears 93
When “Remove Misfeed R: Finisher” Appears 95
When “Remove Misfeed Y: Paper Tray” Appears 96
When "Paper Misfeed: Z1" Appears 97
When "Original Misfeed: P" Appears 98
Removing Misfed Paper in the Duplex Feed Unit 100
Removing Jammed Staples **103**
Adding Staples **105**
Removing Punch-hole Chips **107**
If the message appears even after removing the Punch-hole chips 107

6. Appendix

When the Front Cover Does Not Close **109**
Moving and Transporting the Printer **110**
Moving the Printer 110
Consumables **112**

INDEX **114**

1. Replacing Consumables and Maintenance Kit

Using the Screwdriver

The screwdriver supplied is used for attaching options and is located inside the front cover. By pushing the screw top into the screwdriver, you can work without having to worry about dropping the screw.

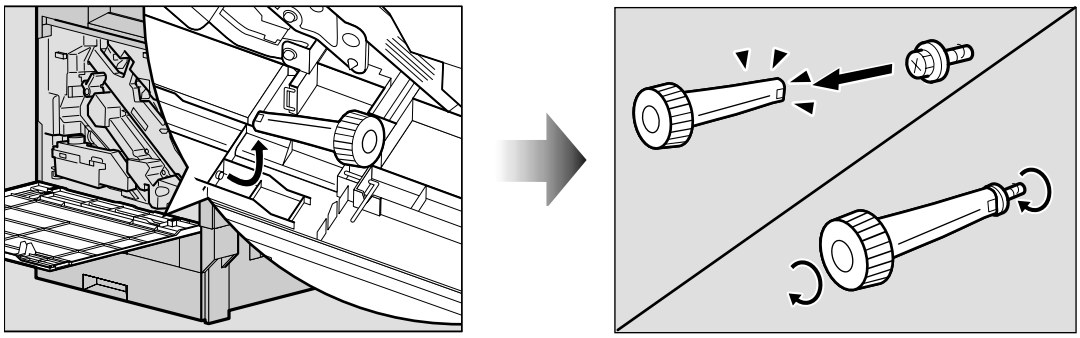

ZHXH170J

Note

❒ After using the screwdriver, return it to its original position inside of the front cover.

Replacing the Toner Cartridge

⚠ ***WARNING:***

- ***Do not incinerate spilled toner or used toner. Toner dust is flammable and will ignite when exposed to an open flame. Disposal should take place at an authorized dealer or appropriate collection site. If you dispose of used toner cartridges yourself, dispose according to local regulations.***

⚠ ***CAUTION:***

- *Keep toner (used or unused) and the toner cartridge out of reach of children.*

Note

❒ The actual number of printed pages differs depending on paper type, size, contents, and settings. For details, see p.112 "Toner cartridge".

If "Add Toner", or "Toner is almost empty." appears on the display, replace the toner cartridge.

Note

❒ A combination of one to four colors, yellow, magenta, cyan, and black is displayed.

❒ If cyan, magenta, or yellow toner runs out, you can print in black and white mode using the black toner. Change the color mode setting to "Black and White" from the printer driver.

❒ If black toner runs out, printing is not possible until the black toner cartridge is replaced.

1 **While pushing the lock button on the upper right cover of the printer (①), open the upper right cover (②).**

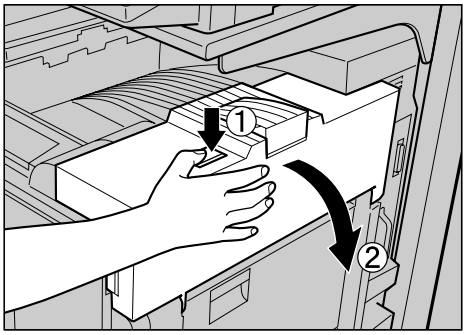

ZJKT010J

From the end, the toner cartridges are installed in the order of magenta (M), cyan (C), yellow (Y), and black (K).

2 **Remove the toner cartridge for the color you want to replace.**

❶ **Unhook the green hook on the toner cartridge with one hand.**

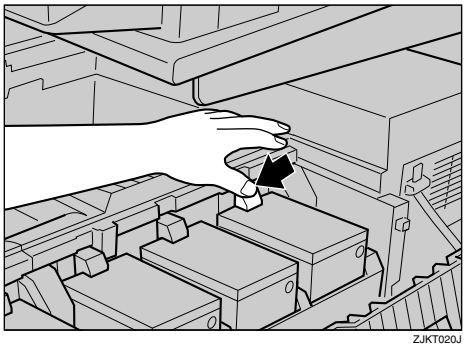

ZJKT020J

❷ **Holding the toner cartridge with the other hand, slowly pull it up and out.**

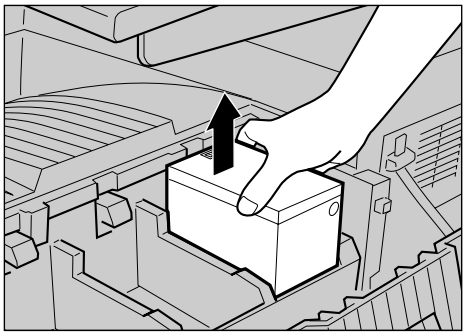

ZJKT060J

Important

❒ Do not shake the removed toner cartridge. Remaining toner might scatter.

Note

❒ Depending on the setting up environment, toner might be left in a toner cartridge. In such cases, reinstall the toner cartridge.

3 **Take the new toner cartridge out of the box.**

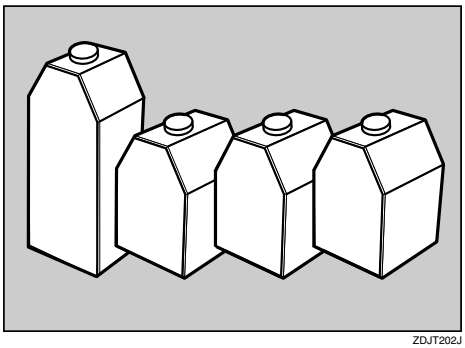

ZDJT202J

Note

❒ The black toner cartridge contains more than the other toner cartridges.

4 **Shake the toner cartridge back and forth five or six times.**

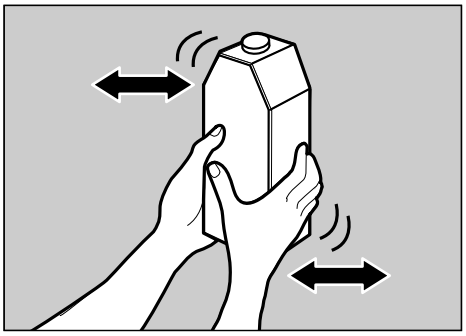

ZDJT203J

5 **Holding the toner cartridge with the metal contact area in front, insert in the direction of the arrow.**

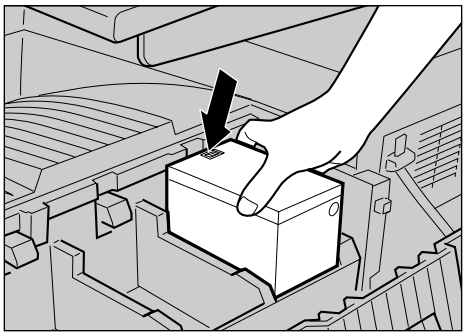

ZJKT030J

Important

❒ Do not touch the metal contact area with your fingers.

6 **Slowly insert the toner cartridge, until the green hook clips over the metal contact area.**

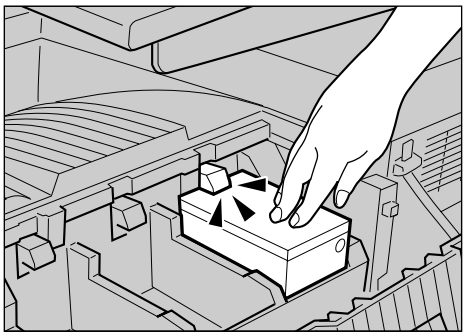

ZJKT040J

Important

- ❒ Do not install and remove toner cartridges repeatedly. This could result in toner leak.

7 Close the upper right cover.

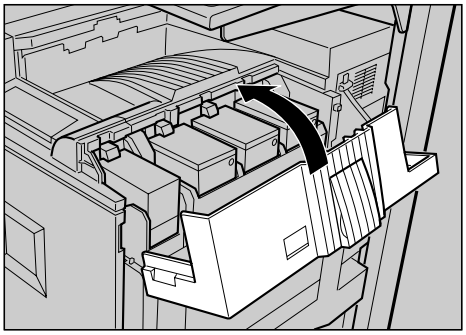

ZJKT050J

Please wait while the toner loads.

Important

- ❒ To avoid malfunction, do not turn off the power while "Loading Toner... " appears on the display.

Detaching the SR770 (2 Tray Finisher)

There are times when you may need to detach the 2 tray finisher from the printer to remove misfed paper. This section describes how to detach the 2 tray finisher.

1 Hold the handle at the top of the 2 tray finisher firmly using one hand, pull the 2 tray finisher straight out, and let go when it stops.

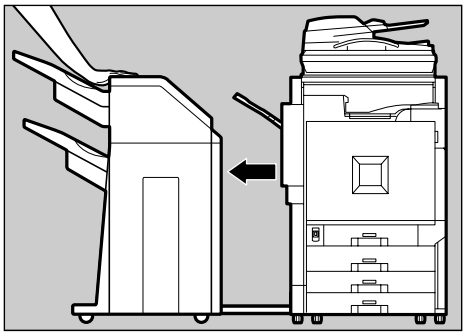

ZJKP450J

The 2 tray finisher is detached from the printer.

2 Use both hands to push it straight back in, and let go when it clicks into place.

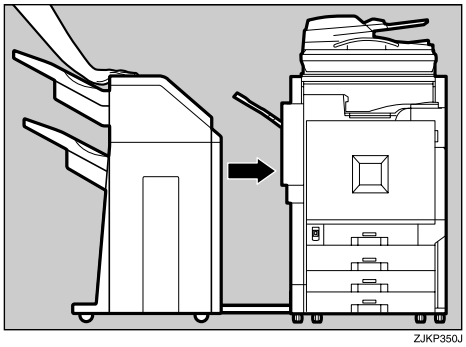

ZJKP350J

The 2 tray finisher is reattached to the printer.

Important

- ❒ Be sure to attach the 2 tray finisher to the printer after closing the duplex reversal unit. See p.7 "Opening and Closing the Duplex Reversal Unit".

Detaching the PT460 (Multi-bin)

When replacing various units or removing misfed paper, the duplex reversal unit is opened. If the optional PT460 (Multi-bin) is attached to the duplex reversal unit, detach it before opening the duplex reversal unit. After closing the duplex reversal unit, reattach the optional PT460 (Multi-bin).

1 Raise the external tray attached to the duplex reversal unit.

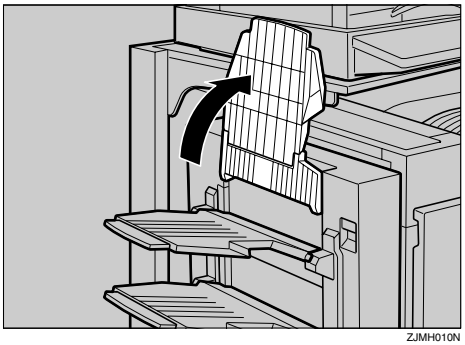

ZJMH010N

2 Pull the upper tray of the PT460 (Multi-bin) out and up to detach it.

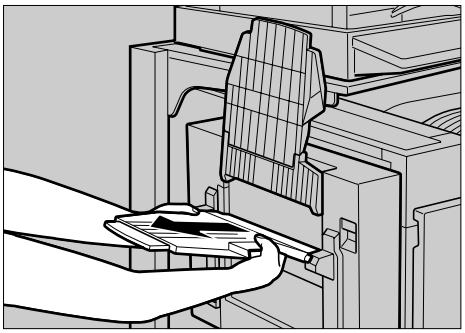

ZJMH030N

3 Pull the lower tray of the PT460 (Multi-bin) out and up to detach it as in step 2.

This completes the detachment of the PT460 (Multi-bin).

4 Raise the external tray attached to the duplex reversal unit.

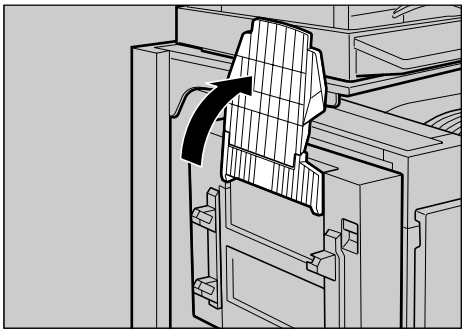

ZJMH020N

5 Insert the hooks on both sides of the lower tray of the PT460 (Multi-bin) into the slots.

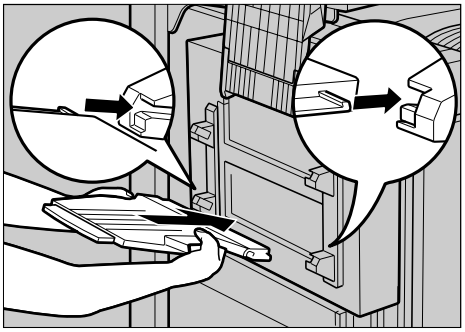

ZJMH040N

6 Insert the hooks on both sides of the upper tray of the PT460 (Multi-bin) into the slots as in step 5.

This completes the reattachment of the PT460 (Multi-bin) to the duplex unit.

Opening and Closing the Duplex Reversal Unit

There are times when you may need to detach the duplex reversal unit to remove misfed paper. This section describes how to detach the duplex reversal unit.

1 Push up the lock release button and leave it in place.

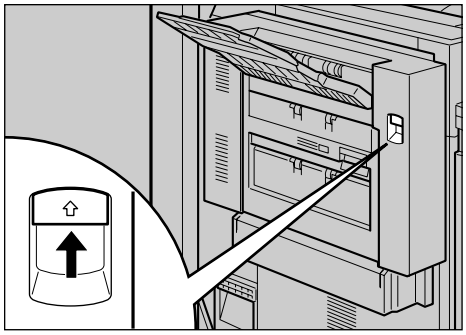

ZJKY010J

2 Lower the duplex reversal unit slowly until it stops.

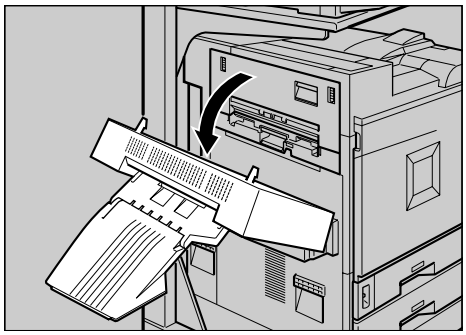

ZJKY020J

Important

- ❒ Open the duplex reversal unit after detaching the 2 tray finisher from the printer. See p.5 “Detaching the SR770 (2 Tray Finisher)”.

Note

- ❒ You do not have to remove the external tray even if the 2 tray finisher is attached.

The duplex reversal unit is opened.

3 Close the duplex reversal unit by raising it slowly using both hands, and push it in, until it clicks into place.

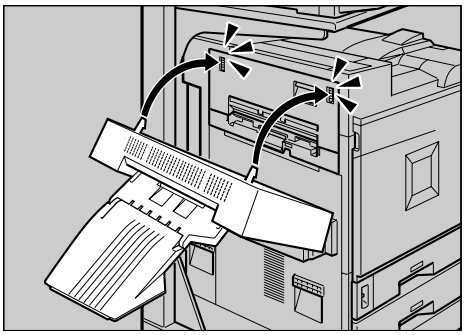

ZJKY030J

The duplex reversal unit is closed.

Important

- ❒ Attach the duplex reversal unit after closing the printer's upper left cover.

Replacing the Fusing Oil Unit

1

⚠ ***CAUTION:***

- *The fusing unit becomes very hot. When installing the new fusing unit, turn off the printer and wait about an hour. After that, install the new fusing unit. Not waiting for the unit to cool could result in a burn.*
- *Keep the fusing oil unit away from flames. There is a risk of fire or burns.*

If "Replace Fusing Oil Unit" appears on the display, replace the fusing oil unit.

1 Turn off the power, and then unplug the power cable.

Important

❒ Be sure to wait about an hour to avoid burns.

2 If 2 tray finisher is installed, detach it from the printer.

Reference

p.5 "Detaching the SR770 (2 Tray Finisher)"

3 If the duplex unit is installed, open the duplex reversal unit.

Reference

p.7 "Opening and Closing the Duplex Reversal Unit"

4 If the external tray is attached to the printer, raise it in the direction of the arrow (①), and then remove it (②).

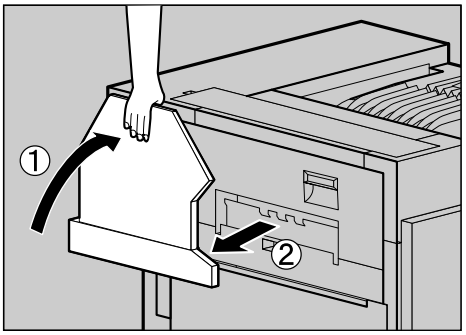

ZDJP038J

5 Slowly pull out the left cover.

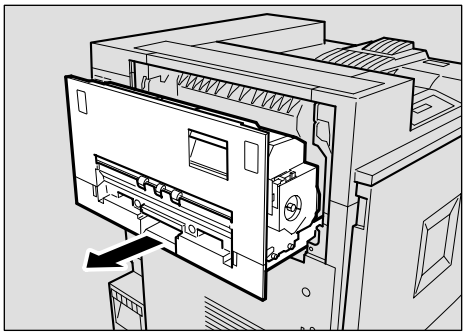

ZHXH090J

6 Open the upper left cover.

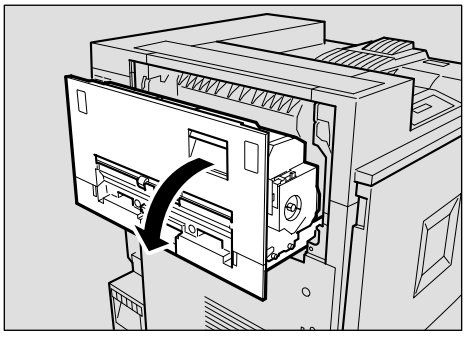

ZHXH100J

7 **Pull the lever down slightly, and then remove the grip securing the fusing oil unit.**

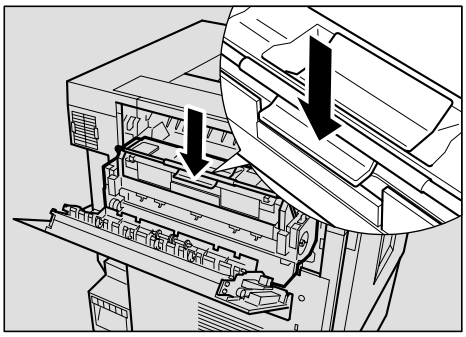

ZHXH033J

Important

- ❒ Do not touch any area other than the green felt parts.

8 **Hold the fusing unit handle using one hand, and then slowly pull the fusing oil unit out horizontally. Put the unit in the bag that comes with the new fusing oil unit, and then seal the bag.**

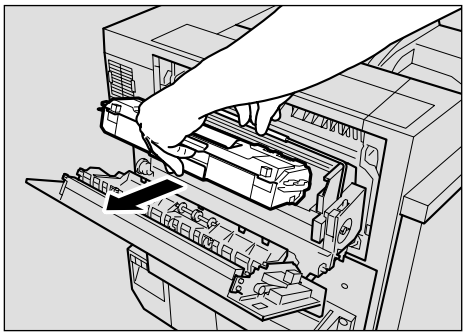

ZHXH050J

Important

- ❒ Do not touch the inside of the fusing unit.

9 **Take the fusing oil unit out of the bag. Hold the green upper part of seal (①), and then slowly peel the seal off. Position the fusing oil unit as shown, and then slowly pull seal (①) out. Finally, hold the upper part of the seal (②), and then slowly peel it off.**

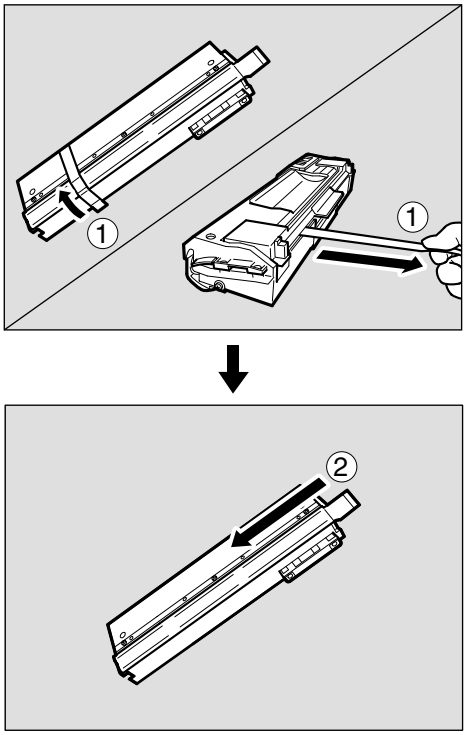

ZHXHK041J

Note

- ❒ Be sure to remove seal (①), and then pull it out horizontally.

Important

- ❒ Be sure to remove the seals to avoid malfunction.
- ❒ Be sure to remove seal (①) first, and then seal (②) to avoid oil leakage.
- ❒ Be sure to put the fusing oil unit in a stable and level place to avoid oil leakage.

❒ After removing the seals, be careful not to let oil from oil-supplying parts, or the seals come into contact with your body or clothes.

10 As shown, hold the fusing oil unit using one hand, hold the green handle with the other, and then slowly insert the unit horizontally, in the direction of the arrow.

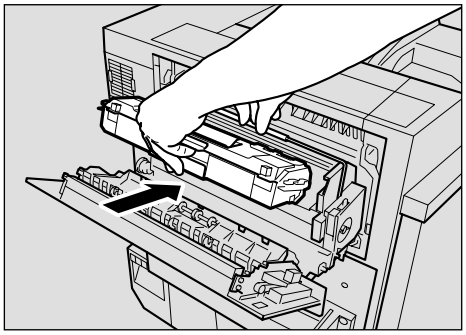

ZHXH060J

Important

❒ Be careful not to get oil on the top metal part of the fusing oil unit.

❒ Insert the fusing oil unit firmly, until it stops.

11 Slowly turn the fusing oil unit handle in the direction of the arrow, until it clicks.

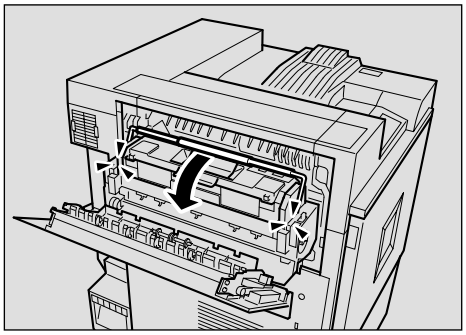

ZHXH070J

12 Close the upper left cover (①), and then push the part labeled PUSH next to the handle at the bottom rear, until it clicks (②).

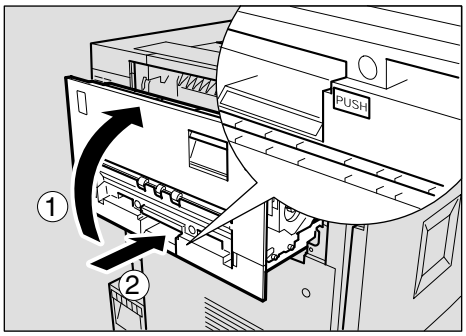

ZHXH082J

13 If you removed the external tray in step 4, reattach it to the printer. Insert the hooks of the external tray into the printer slits, and then lower it toward you.

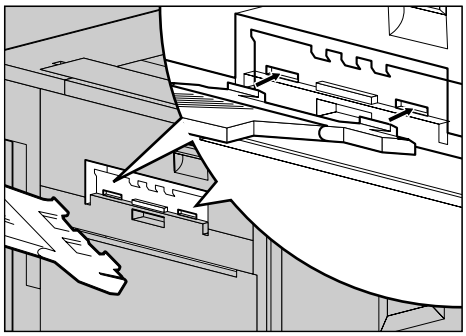

ZDJH010J

14 If the duplex unit is installed, close the duplex reversal unit.

Reference

p.7 "Opening and Closing the Duplex Reversal Unit"

15 If the 2 tray finisher is installed, reattach it to the printer.

Reference

p.5 "Detaching the SR770 (2 Tray Finisher)"

16 Plug in the power cable, and then turn on the power.

Note

- If you dispose of used fusing oil unit by yourself, dispose according to local regulations.

Replacing the Photoconductor Unit

If "Replacement Photoconductor Unit is required", or "Replace Photoconductor Unit" appears on the display, replace the appropriate photoconductor unit according to the indicated colors.

Note

- ❒ The photoconductor unit or units to be replaced are indicated on the display.
- ❒ If "Black" appears, replace the black photoconductor unit.
- ❒ If "yellow/magenta/cyan" appears, replace the three color (CMY) photoconductor units.
- ❒ The replacement procedure for the third photoconductor unit from the top left will be described. The procedure is the same for all four photoconductor units.

1 Turn off the power, and then unplug the power cable.

2 Slowly open the front cover of the printer, remove the green screwdriver.

Reference

p.1 "Using the Screwdriver"

3 Turn the green lever counterclockwise.

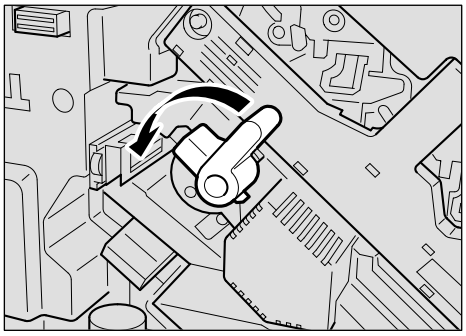

ZHXH410J

4 Loosen the two screws fastening the inner cover, using the provided screwdriver.

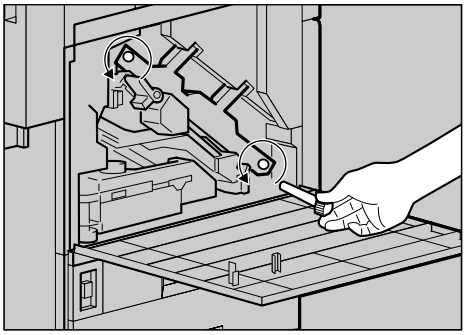

ZHXH430J

You cannot remove these two screws.

5 Lift the inner cover until it clicks into place and holds.

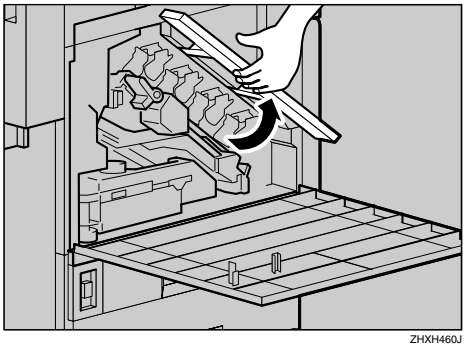

ZHXH460J

The photoconductor units are installed as shown. Starting from the upper left, the units are attached in the order of black (K), yellow (Y), cyan (C), and magenta (M).

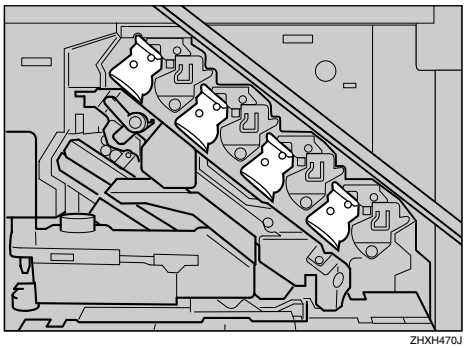

ZHXH470J

6 Remove the photoconductor unit you want to replace.

For black, remove the upper left one, and for color, remove the three on the right.

❶ **Move the green hook slowly to the right, as shown. The green hook is located on the upper right of the photoconductor unit.**

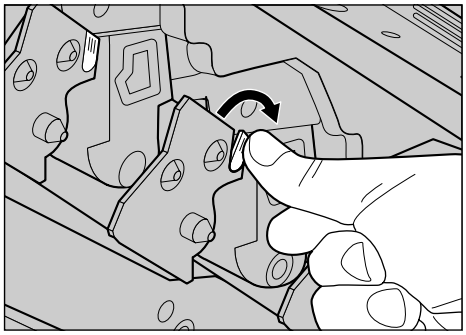

ZDJX701J

❷ **Hold the hook down, grip the green areas at the top and bottom of the photoconductor unit, and then slowly pull the unit out until you can see the entire green handle.**

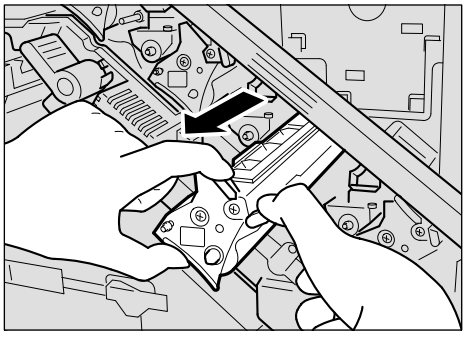

ZHXH890J

Important

❒ Pulling out the photoconductor unit quickly might cause it to fall.

❸ **Lift and hold the green handle at the top (①), and then slowly pull out the unit (②).**

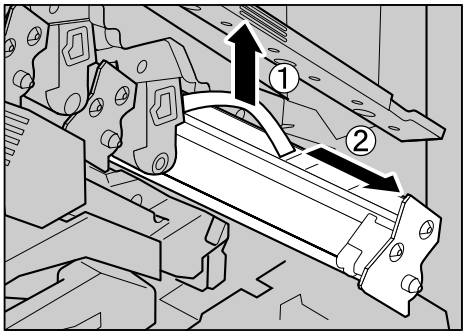

ZHXH490J

7 Install the new photoconductor unit.

For black, install one, and for color, install all three.

❶ **Take the unit out of the bag.**

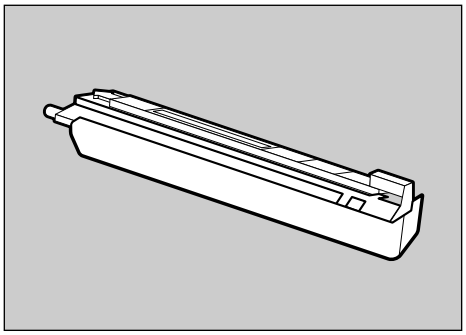

ZDJH221J

❷ **Hold the photoconductor unit, and remove the adhesive tape at the tip of the unit.**

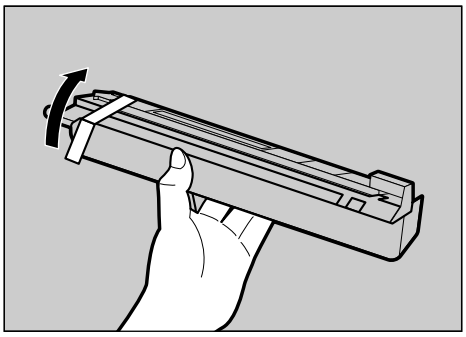

ZDJH222J

Important

❒ Do not remove the cover attached to the bottom of the photoconductor unit yet.

❸ **Line up the green arrow at the tip of the photoconductor unit with the rail inside the printer.**

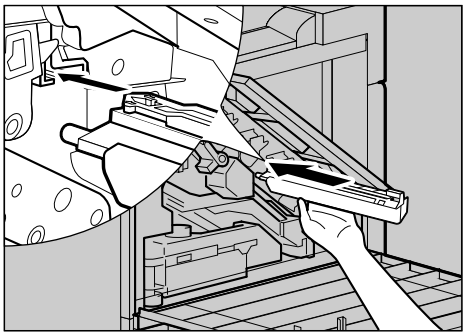

ZHXH500J

Important

❒ Make sure the green arrow fits securely to the rail before proceeding to the next step.

❹ **Slowly push the front of the photoconductor unit, slide the unit on the cover, and then push in until it stops.**

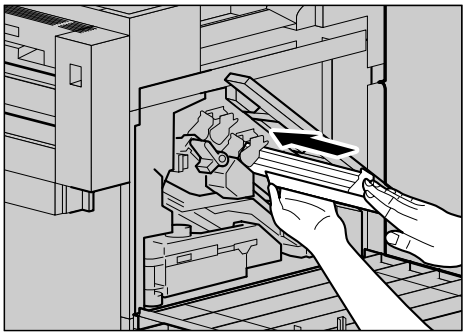

ZHXH510J

Important

❒ If you do not attach the green arrow of the photoconductor unit securely to the rail, you might damage the photoconductor unit.

❒ Do not touch the light-sensitive area of the photoconductor unit.

❺ **Remove the cover, and then slowly push in the photoconductor unit, until it stops.**

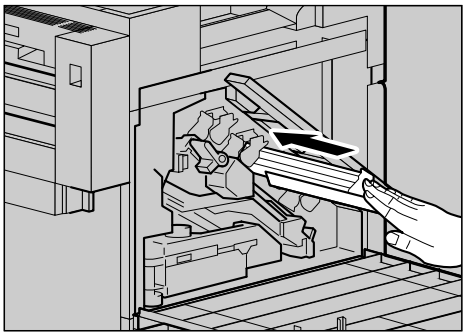

ZHXH520J

8 **Slowly lower the inner cover out.**

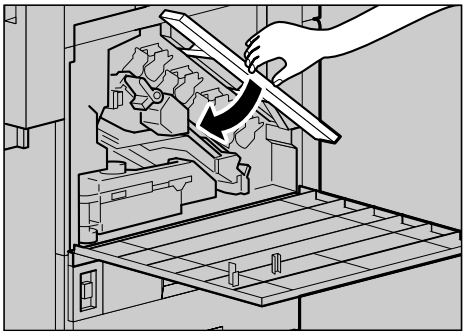

ZHXH530J

9 **Tighten the two screws using the provided screwdriver.**

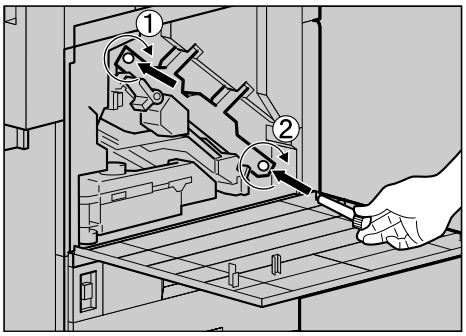

ZHXH440J

Note

❒ Be sure to return the provided screwdriver to its original position on the back of the front cover.

10 Turn the green lever clockwise.

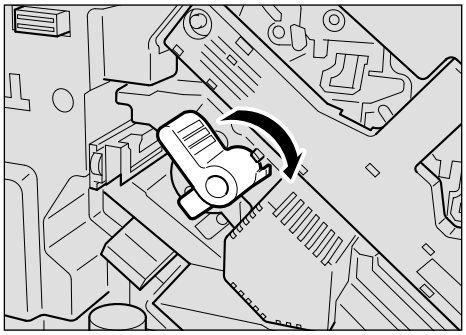

ZHXH420J

11 Slowly close the front cover by pushing the two areas on the left and right.

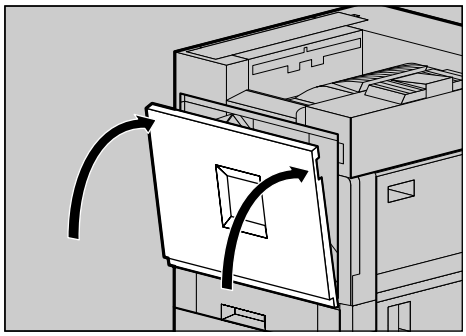

ZDJH041J

12 Plug in the power cable, and then turn on the power.

"Color is being adjusted" appears on the display. The printer starts calibration. Please wait until it stops.

Important

- ❒ To avoid malfunction, do not turn off the power during calibration.

Replacing the Development Unit

If "Replacement of Development Unit is required" appears on the display, replace the appropriate development unit according to the indicated colors.

Note

- ❒ The development unit or units to be replaced are indicated on the display.
- ❒ If "Black" appears, replace the black development unit.
- ❒ If "yellow/magenta/cyan" appears, replace the three color (CMY) development units.
- ❒ A dustproof filter is attached to the black development unit. When replacing the black development unit, also replace the dustproof filter. See p.23 "Replacing the Dustproof Filter".
- ❒ When replacing the black development unit, clean the registration roller. See p.32 "Cleaning the Registration Roller".
- ❒ The replacement procedure for the third development unit from the top left will be described. The procedure is the same for all four development units.

1 Turn off the power, and then unplug the power cable.

2 Slowly open the front cover of the printer, remove the green screwdriver.

Reference

p.1 "Using the Screwdriver"

3 Turn the green lever counterclockwise.

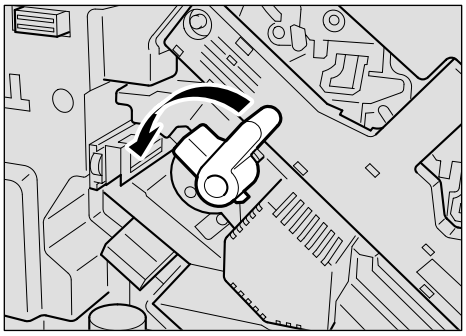

ZHXH410J

4 Loosen the two screws fastening the inner cover, using the provided screwdriver.

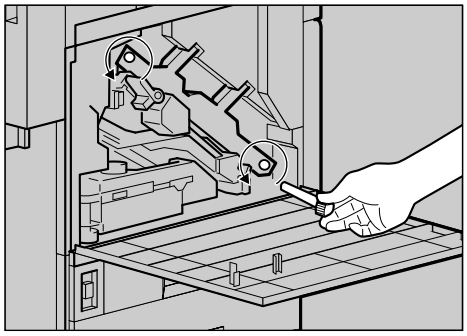

ZHXH430J

You cannot remove these two screws.

5 Lift the inner cover until it clicks into place and holds.

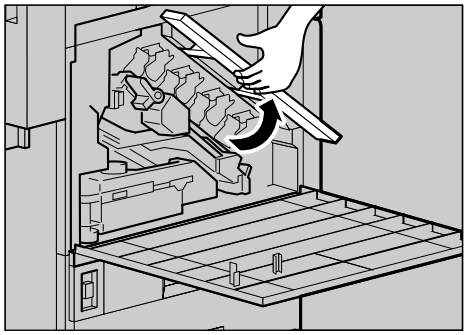

ZHXH460J

The development units are installed as shown. Starting from the upper left, the units are attached in the order of black (K), yellow (Y), cyan (C), and magenta (M).

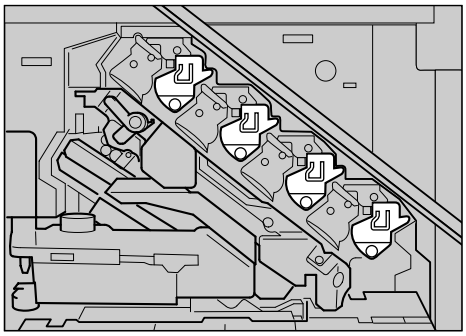

ZHXH540J

6 Remove the development unit.

The procedure for removing the unit is the same for all four colors.

❶ Hook your finger into the green tab in front of the development unit you want to replace, and then pull it out halfway.

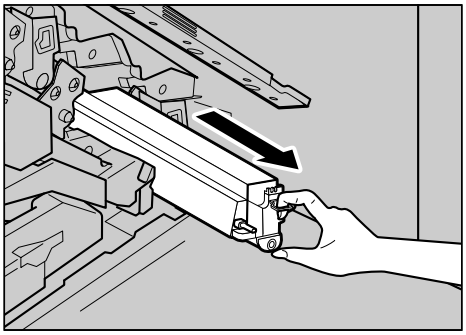

ZHXH550J

Important

- ❒ Pulling out the development unit quickly might cause it to fall.

❷ Hold the right side of the Development unit using your right hand, and pull the unit slowly out.

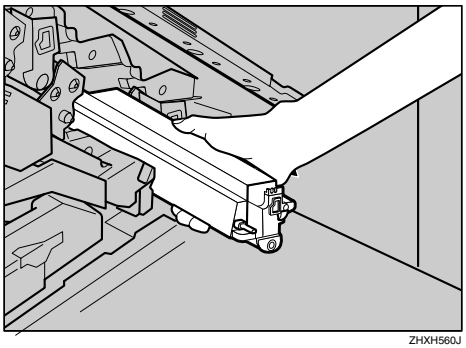

ZHXH560J

Important

- ❒ Be careful not to touch the right side of development unit.
- ❒ Be careful not to let it come into contact with your hands or clothes.

7 Install a new development unit.

The procedure for attaching the development unit is the same for all four colors.

❶ Take the unit out of the bag.

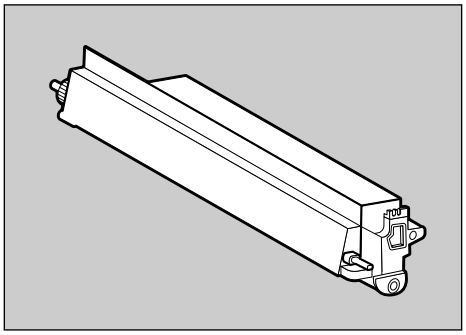

ZDJH226J

❷ **Insert the development unit along the rail, and push in slowly, until it stops.**

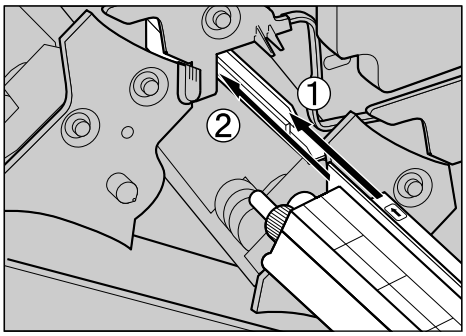

ZDJH227E

❸ **Holding the development unit, slowly pull out the tape horizontally.**

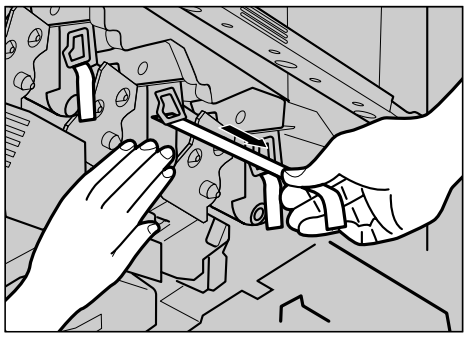

ZHXH620J

Important

- ❒ To avoid malfunction, be sure to pull out the tape.
- ❒ The removed tape is dirty. Be careful not to let it come into contact with your hands or clothes.

8 **Slowly lower the inner cover out.**

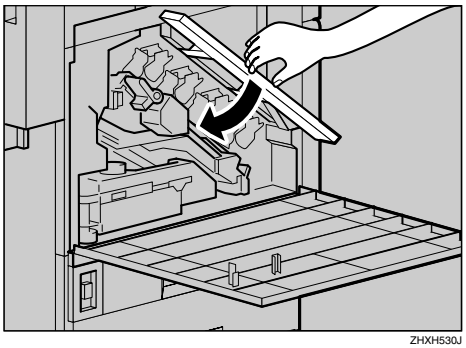

ZHXH530J

9 **Tighten the two screws using the provided screwdriver.**

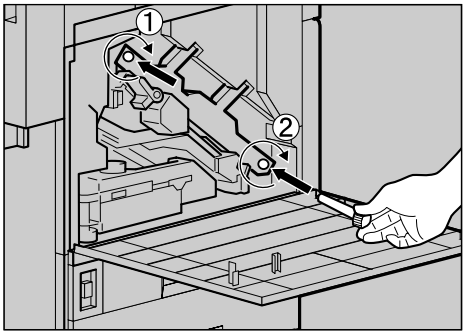

ZHXH440J

Note

- ❒ Be sure to return the provided screwdriver to its original position on the back of the front cover.

10 **Turn the green lever clockwise.**

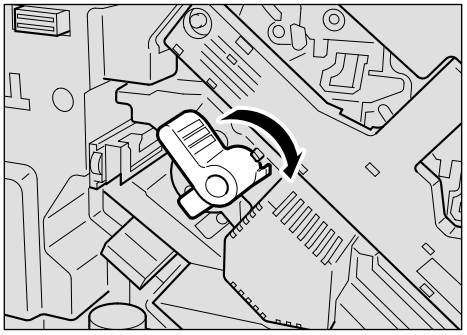

ZHXH420J

11 Slowly close the front cover by pushing the two areas on the left and right.

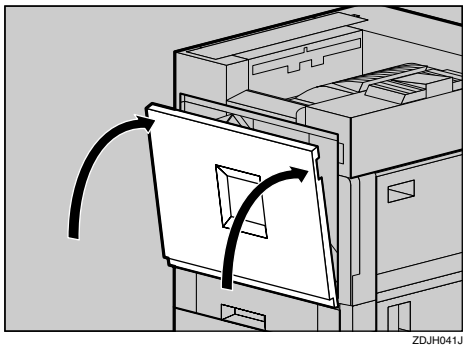

12 Plug in the power cable, and then turn on the power.

"Please Wait" appears on the display, and initial adjustments begin. Please wait until it stops.

Important

- ❒ To avoid malfunction, do not turn off the power during adjustments.

Replacing the Fusing Unit

1

⚠ ***CAUTION:***

- *The fusing unit becomes very hot. When installing the new fusing unit, turn off the printer and wait about an hour. After that, install the new fusing unit. Not waiting for the unit to cool could result in a burn.*
- *Keep the fusing oil unit away from flames. There is a risk of fire or burns.*

If "Fusing Unit Replacement" appears on the display, replace the fusing unit.

1 Turn off the power, and then unplug the power cable.

Important

❒ Be sure to wait about an hour to avoid burns.

2 If the 2 tray finisher is installed, detach it from the printer.

Reference

p.5 "Detaching the SR770 (2 Tray Finisher)"

3 If the duplex unit is installed, open the duplex reversal unit.

Reference

p.7 "Opening and Closing the Duplex Reversal Unit"

4 If the external tray is attached to the printer, raise it in the direction of the arrow (①), and then remove it (②).

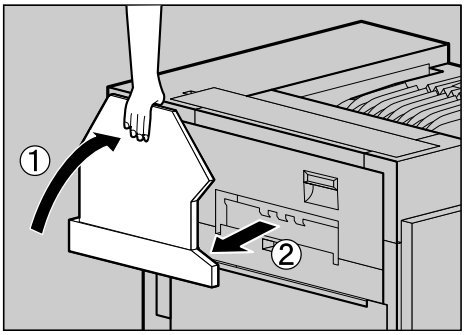

ZDJP038J

5 Slowly pull out the left cover.

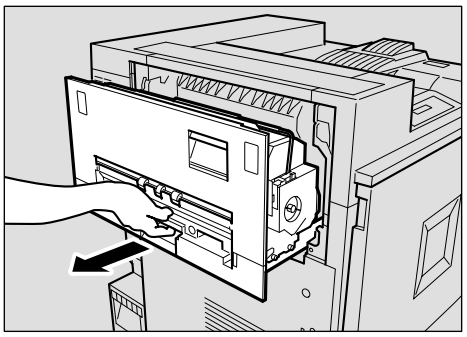

ZHXH010J

6 Open the upper left cover.

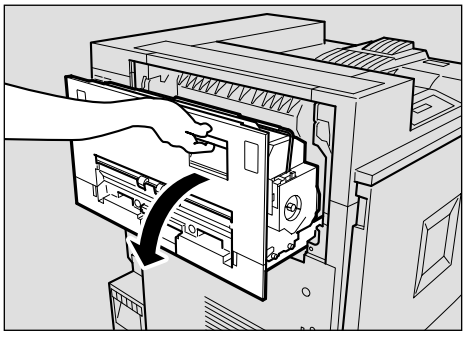

ZHXH020J

7 Pull the lever down slightly, and then remove the grip securing the fusing oil unit.

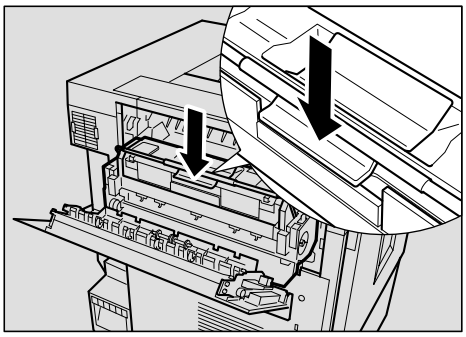

ZHXH033J

Important

- ❒ Do not touch any area other than the green felt parts.

8 Hold the fusing unit handle as shown, slowly pull the fusing unit up, and then put it down on a surface.

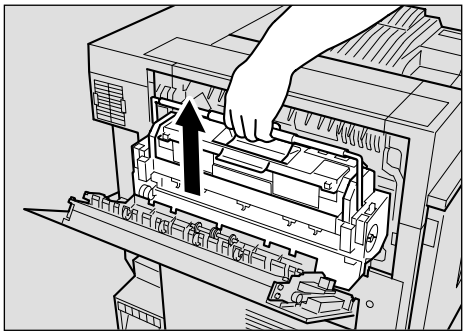

ZHXH810J

⚠ ***CAUTION:***

- *Touch only the handles, no other parts. The fusing oil unit gets very hot and will burn your hands if you touch it.*

Important

- ❒ Do not touch the inside of the fusing unit.
- ❒ When moving the fusing unit, keep it steady, otherwise the fusing oil unit may come off or oil may leak.

9 Take the new fusing unit out of the bag and put it down on a level surface.

10 Pull the fusing oil unit (attached to the fusing unit) out horizontally, and then remove it.

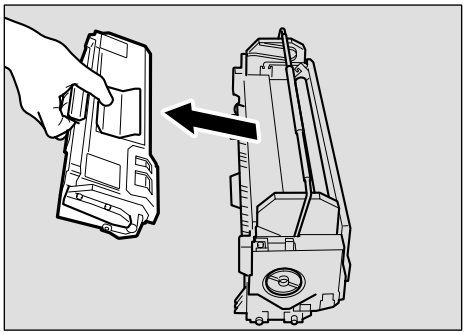

ZHXH790J

⚠ ***CAUTION:***

- *Keep the fusing oil unit away from flames. There is a risk of fire or burns.*

Important

- ❒ To avoid getting oil on yourself, do not touch any areas other than the green felt parts.

11 Install the fusing oil unit removed in step 9 in the new fusing unit. Hold the fusing oil unit as shown, and then insert it horizontally into the part of the fusing unit shown below.

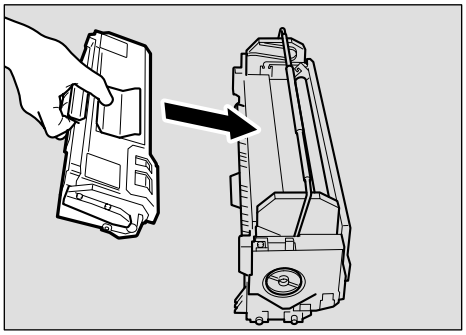

ZHXH800J

Important

- ❒ Be careful not to get oil on the top metal part of the fusing oil unit.
- ❒ Insert the fusing oil unit firmly, until it stops.

12 Put the removed fusing oil unit in the bag that enclosed the new fusing oil unit, and then seal it.

13 Hold the fusing unit handle and slowly lower the unit to align it with the marks on the machine stand.

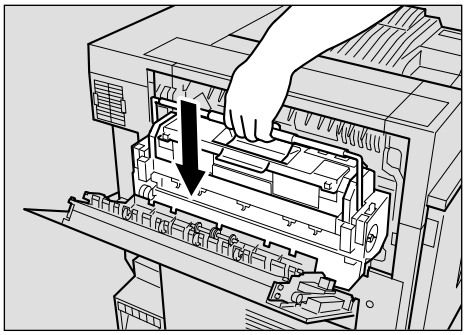

ZHXH820J

Important

- ❒ Install the fusing unit so the blue dial is on the front cover side.

14 Slowly turn the fusing oil unit handle in the direction of the arrow, until it clicks.

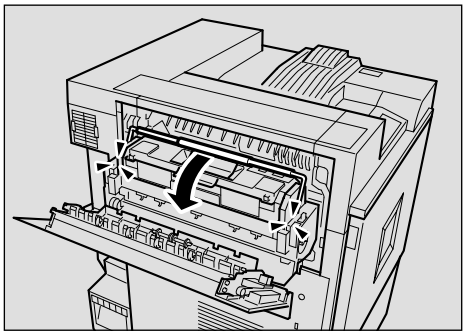

ZHXH070J

15 Close the upper left cover (①), and then push the part labeled PUSH next to the handle at the bottom rear, until it clicks (②).

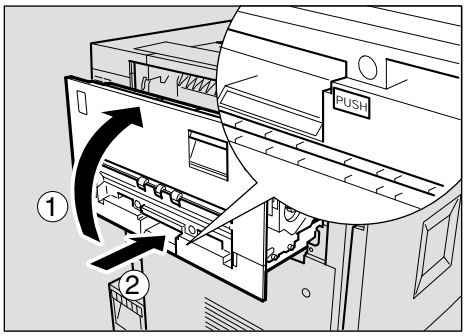

ZHXH082J

16 If you removed the external tray in step 4, reattach it to the printer. Insert the hooks of the external tray into the printer slits, and lower it toward you.

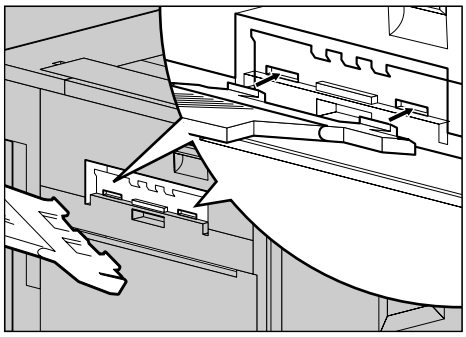

ZDJH010J

17 If the duplex unit is installed, close the duplex reversal unit.

Reference

p.7 "Opening and Closing the Duplex Reversal Unit"

18 If the 2 tray finisher is installed, reattach it to the printer.

Reference

p.5 "Detaching the SR770 (2 Tray Finisher)"

19 Plug in the power cable, and then turn on the power.

Replacing the Dustproof Filter

The dustproof filter is attached to the black development unit. When replacing the black development unit, also replace the dustproof filter.

The dustproof filter is attached to the left side of the printer, as shown.

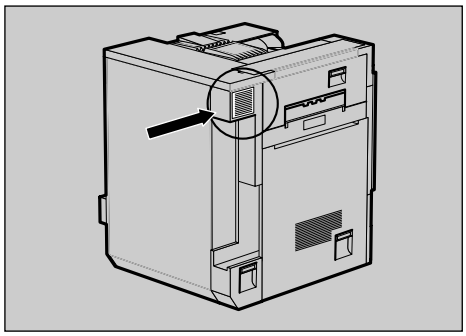

ZDJH801J

1 **Turn off the power, and then unplug the power cable.**

2 **Push in the grips on both sides of the dustproof filter cover to pull it off.**

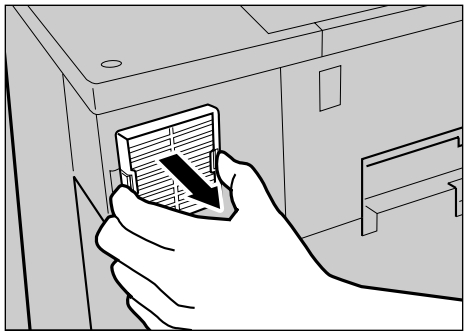

ZHXH570J

Note

❒ Be sure to put the removed dustproof filter cover down on a stable and level surface.

3 **From the box that contained the black development unit, take out the new dustproof filter and glove.**

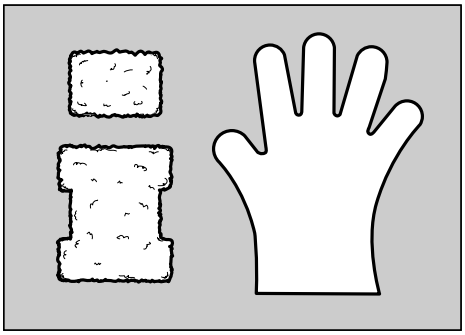

ZDJH214J

4 **Put the glove on either hand.**

5 **Using your gloved hand, slowly take out the dustproof filters attached to the dustproof filter cover, one by one, and put them into the box that contained the black development unit.**

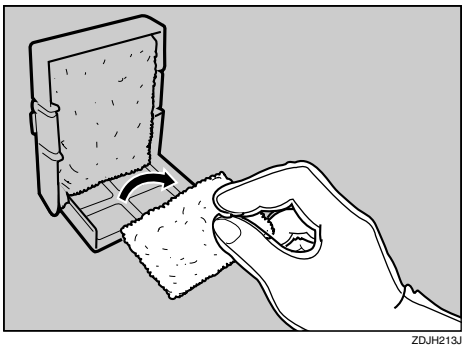

ZDJH213J

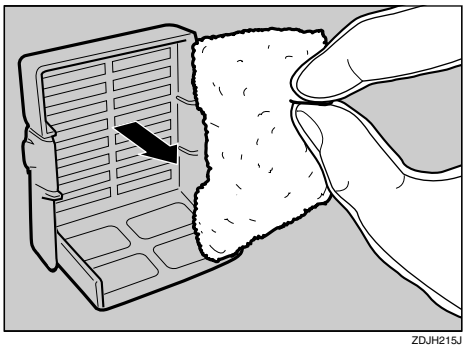

ZDJH215J

Important

- ❒ Handle the removed dustproof filters with care. If you shake them, dust might scatter.

6 **Take off the glove.**

Important

- ❒ Be sure to take off the glove before attaching a new dustproof filter.

7 **Attach the new dustproof filters to the dustproof filter cover one by one.**

❶ **Attach the large filter.**

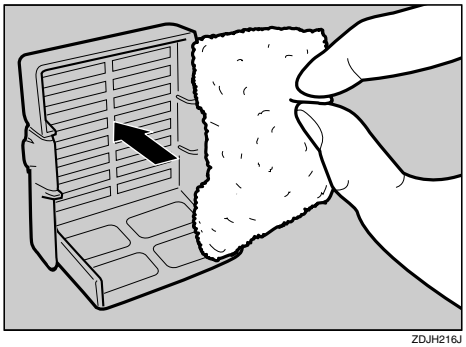

ZDJH216J

❷ **Attach the small filter.**

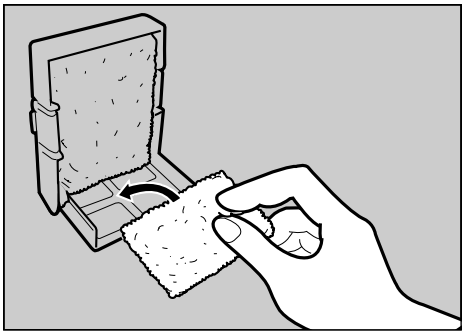

ZDJH217J

8 **Insert the dustproof filter cover into the upper left area of the printer.**

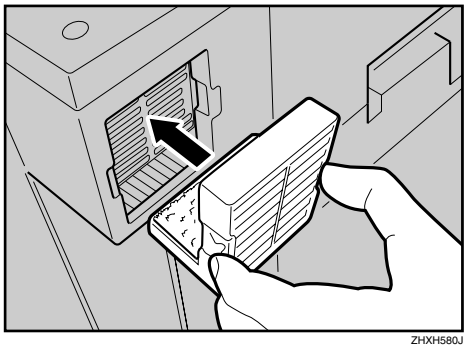

ZHXH580J

9 **Plug in the power cable, and then turn on the power.**

Replacing the Used Toner Bottle

If "Used Toner Bottle Replacement" appears on the display, replace the used toner bottle.

1 **Turn off the power, and then unplug the power cable.**

2 **Slowly open the front cover by pulling down from the two areas on the left and right.**

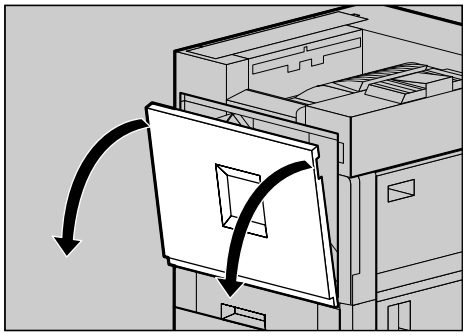

ZDJH007J

3 **Carefully pivot the waste oil bottle outward, in the direction of the arrow.**

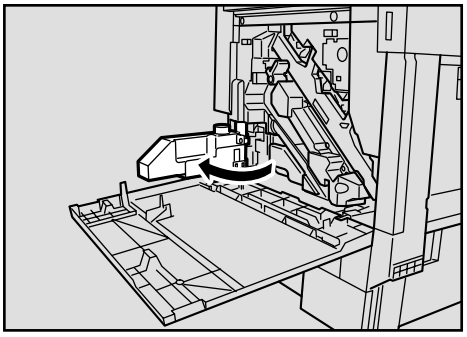

ZHXH150J

⚠ ***CAUTION:***

- *Keep the waste oil bottle away from flames. There is a risk of fire or burns.*

4 **Take the new used toner bottle out of the bag.**

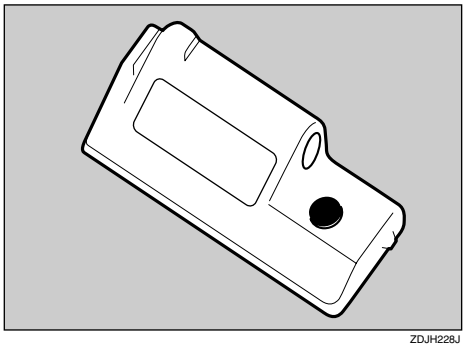

ZDJH228J

5 **Slowly remove the used toner bottle from inside the printer.**

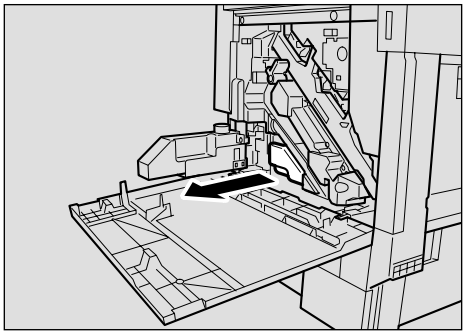

ZHXH590J

Important

❒ Be sure to remove the used toner bottle horizontally.

6 **Remove the lid (①), and then put it in the position shown in the illustration (②).**

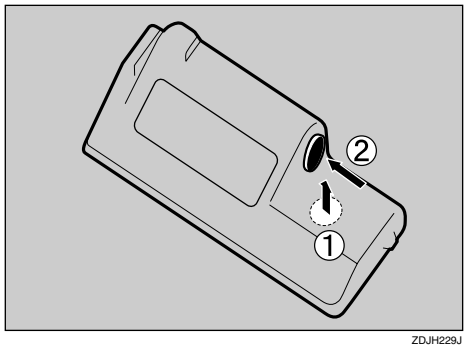

ZDJH229J

7 **Put the used toner bottle into the bag that contained the new used toner bottle, and then seal the bag.**

Important

- ❒ Be sure to handle the bottle carefully so waste toner does not spill.

8 **Insert the new used toner bottle as shown.**

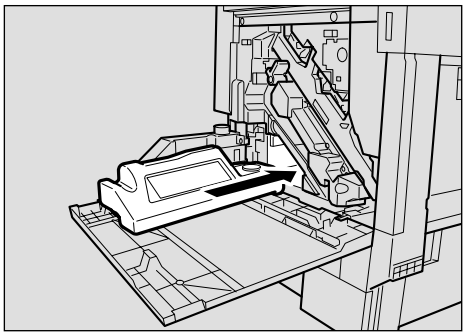

ZHXH610J

9 **Push it in until it stops.**

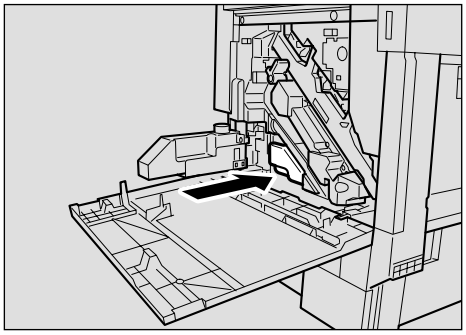

ZHXH600J

Important

- ❒ Be sure to firmly insert the used toner bottle to avoid toner leakage inside the printer.

10 **Slowly close the waste oil bottle in the direction of the arrow.**

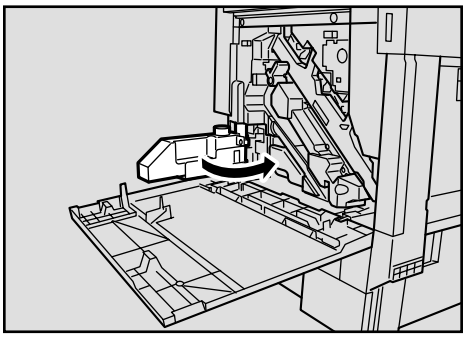

ZHXH160J

11 **Slowly close the front cover by pushing the two areas on the left and right.**

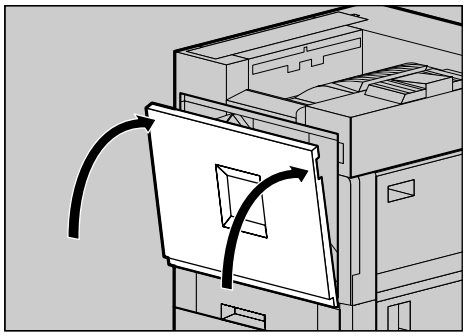

ZDJH041J

12 **Plug in the power cable, and then turn on the power.**

Replacing the Paper Feed Rollers

If "Replace Feed Roller" appears on the display, replace all three feed rollers.

Note

❒ The following illustrations are examples of replacing the paper feed rollers of Tray 1. The same procedure applies to other trays.

1 **Check the contents of the box.**

❖ **Paper Feed Roller A**

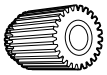

❖ **Paper Feed Roller B**

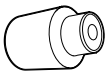

❖ **Paper Feed Roller C**

❖ **Two Stoppers**

2 **Turn off the power, and then unplug the power cable and interface cable.**

Important

❒ If you are replacing the paper feed rollers of the optional 2000-sheet Large Capacity Tray, remove all paper from the tray.

3 **Slowly pull out all trays while lifting up a little.**

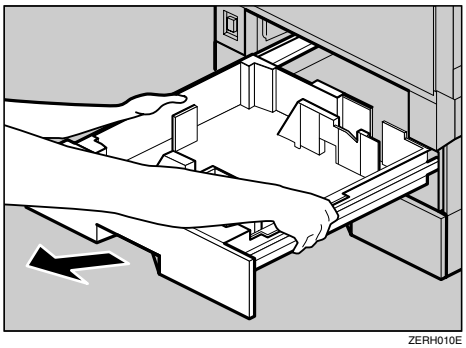

ZERH010E

Note

❒ If you are replacing the paper feed rollers of the optional paper feed unit, or 2000-sheet Large Capacity Tray, pull out all paper trays from each unit.

4 **Check the position of the paper feed rollers.**

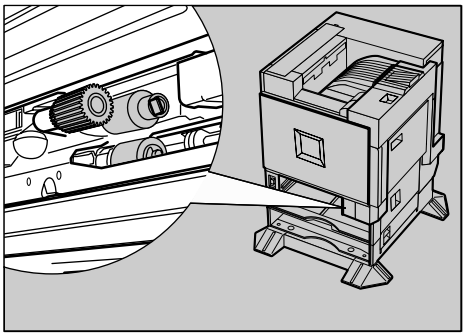

ZERH020E

Confirm the positions and names of each roller.

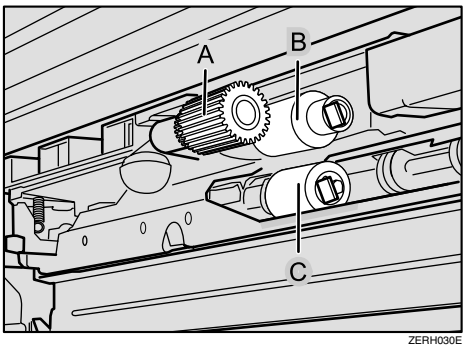

ZERH030E

5 **While pushing the pin of paper feed roller A outwards (①), remove the paper feed roller (②).**

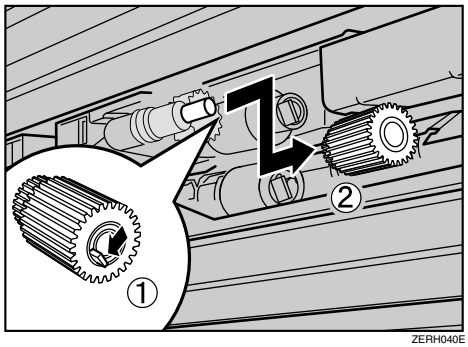

ZERH040E

6 **Remove the stopper from paper feed roller B (①), and then remove the roller (②).**

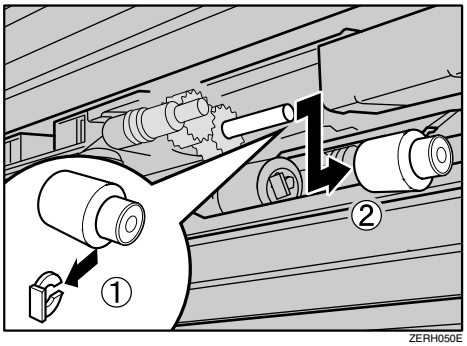

ZERH050E

7 **Remove the stopper from paper feed roller C (①), and then remove the roller (②).**

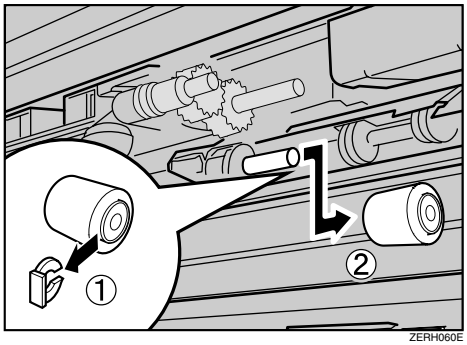

ZERH060E

8 **Hold the new paper feed roller C with its gear towards the shaft. Insert it into the rear shaft so that the roller gear interlocks with the shaft gear (①). Lock the roller with the stopper (②).**

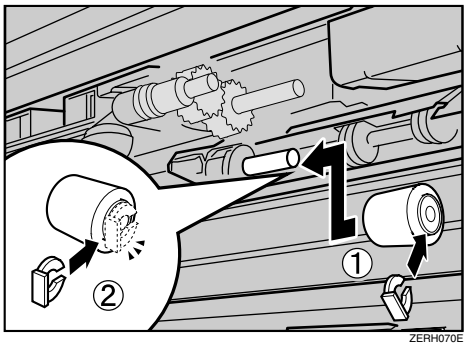

ZERH070E

9 **Hold the new paper feed roller B with its gear towards the shaft. Insert it into the rear shaft so that the roller gear interlocks with the shaft gear (①). Lock the roller with the stopper (②).**

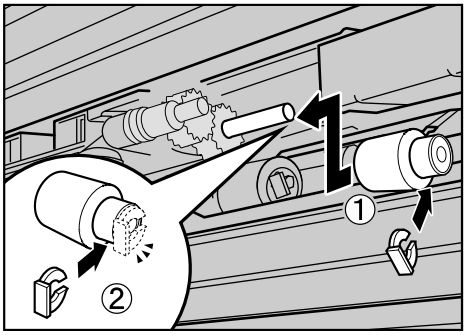

ZERH080E

10 Hold the new paper feed roller A with its pin towards you (①). Insert the roller onto the front shaft until it clicks into place (②).

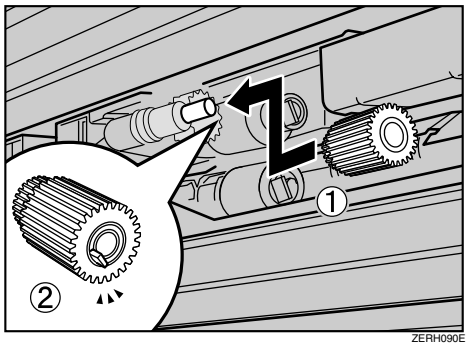

11 Slowly slide all trays back into the printer until they stop.

Note

❒ If you are replacing the paper feed rollers of the optional 2000-sheet Large Capacity Tray, load the stocks removed in step 2 into the tray.

2. Cleaning and Adjusting the Printer

Cautions to Take When Cleaning

⚠ ***WARNING:***

- ***Do not remove any covers or screws other than those specified in this manual. Some parts of the machine are at a high voltage and could give you an electric shock. Also, if the machine has laser systems, direct (or indirect) reflected eye contact with the laser beam may cause serious eye damage. When the machine needs to be checked, adjusted, or repaired, contact your service representative.***
- ***Do not take apart or attempt any modifications to this machine. There is a risk of fire, electric shock, explosion or loss of sight. If the machine has laser systems, there is a risk of serious eye damage.***

⚠ ***CAUTION:***

- *When removing misfed paper, do not touch the fusing section because it could be very hot.*

Clean the printer periodically to maintain print clarity.

Dry wipe the exterior using a soft cloth. If dry wiping is not enough, wipe using a soft, wet cloth that is well wrung out. If you still cannot remove the stain or grime, use a neutral detergent, then wipe over with a well wrung wet cloth, dry wipe, and let it dry.

Important

❒ To avoid deformation, discoloration, or cracking, do not use volatile chemicals, such as benzine and thinner, or spray insecticide on the printer.

❒ If there is dust or grime inside the printer, wipe it away using a clean, dry cloth.

Cleaning the Registration Roller

⚠ ***CAUTION:***

- *The inside of the printer becomes very hot. To avoid burns, do not touch parts labelled "hot surface", otherwise it could cause a burn.*

Clean the roller when replacing the black development unit.

1 Turn off the power, and then unplug the power cable.

2 Open the right cover as shown.

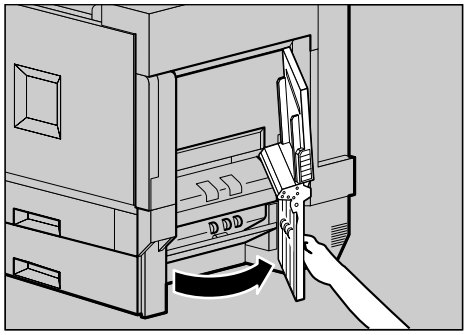

ZDJH206J

The registration roller is set as shown.

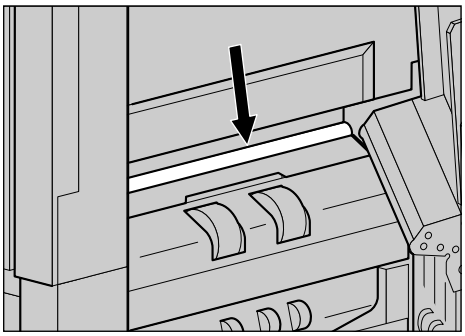

ZDJH703J

3 Wipe around the registration roller by turning it and applying a soft damp cloth.

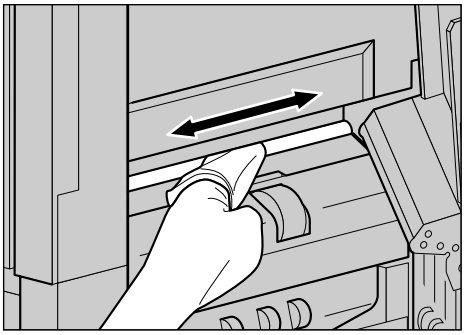

ZDJH704J

Important

❒ Do not use chemical cleaners or organic solvents such as thinners or benzene.

4 Close the right cover by pushing the area labeled "PUSH".

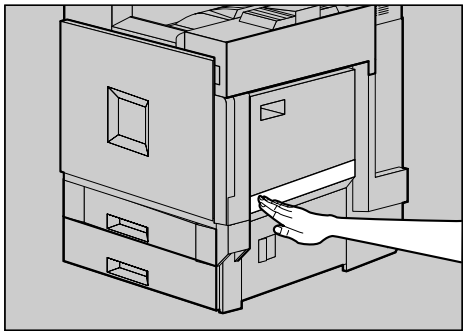

ZDJP708J

5 Plug in the power cable, and then turn on the power.

Cleaning the DustProof Glass

The dustproof glass may require cleaning if white lines appear on print.

1 Turn off the power, and then unplug the power cable.

2 Open the front cover, and then remove the cleaning brush.

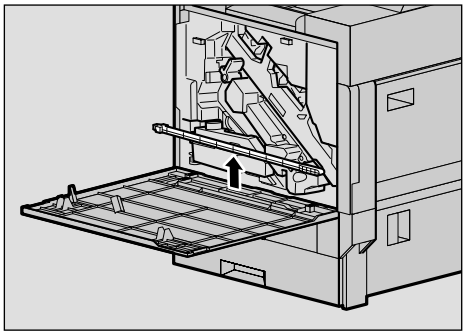

ZHXH631J

There are four holes for cleaning the dustproof glass.

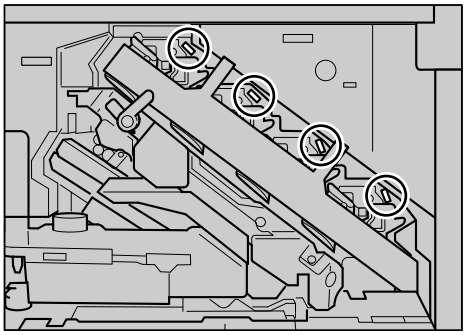

ZHXH640J

3 Slide the cleaning brush in and out slowly 8 to 10 times to clean all four areas.

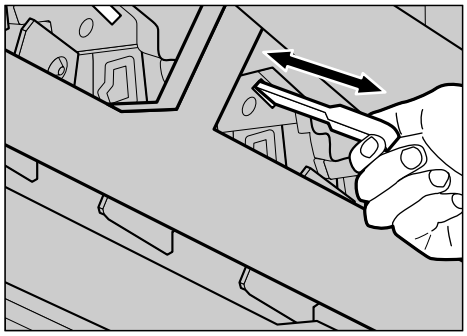

ZDJP707J

Important

- ❒ Do not insert the brush roughly. Doing so may damage the printer.

4 Return the cleaning brush to its original position.

5 Plug in the power cable, and then turn on the power.

Cleaning the Exposure Glass

If the exposure glass is dirty, you might not be able to make copies or scan as you want. If it is dirty, clean the exposure glass.

2

❖ Cleaning the machine

Wipe the machine with a soft, damp cloth. Then, wipe it with a dry cloth to remove the water.

Important

❒ Do not use chemical cleaner or organic solvent, such as thinner or benzene. If they get into the machine or melt plastic parts, a failure might occur.

Do not clean parts other than those specified in this manual. Such parts should be cleaned by your service representative.

Cleaning the Exposure Glass

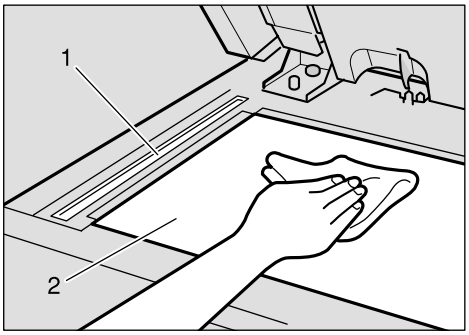

Clean 1 and 2.

Cleaning the Cover

If the exposure glass cover or document feeder sheet is dirty, you might not be able to make copies or scan as you want. If they are dirty, clean them.

Cleaning the machine

Wipe the machine with a soft, damp cloth. Then, wipe it with a dry cloth to remove the water.

Important

- ❒ Do not use chemical cleaner or organic solvent, such as thinner or benzene. If they get into the machine or melt plastic parts, a failure might occur.
- ❒ Do not clean parts other than those specified in this manual. Such parts should be cleaned by your service representative.

When using the document feeder

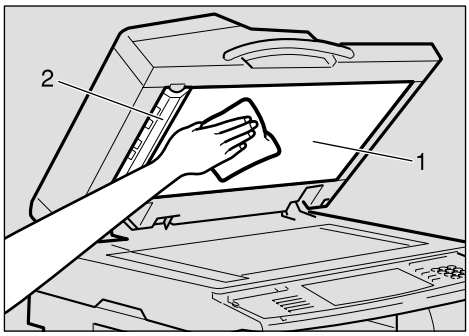

GEWH130E

Clean 1 and 2.

When using the exposure glass cover

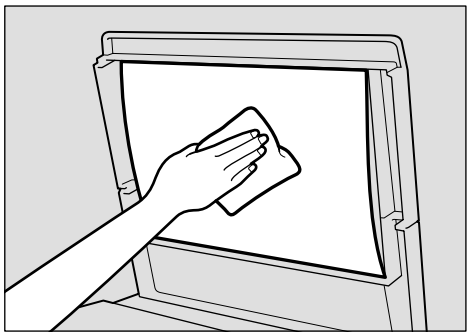

GEWH140E

Adjusting the Color Registration

After moving the printer, printing on thick paper, or printing repeatedly for some time, color degradation may occur. By performing color registration adjustment, you can restore optimum print quality.

Auto Adjustment

If documents show color degradation after the printer is moved, perform automatic color adjustment.

1 Press the 【User Tools/Counter】 key.

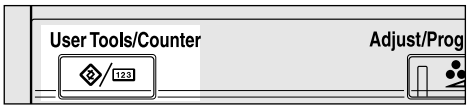

ZFLS110N

"User Tools/Counter" appears on the panel display.

2 Press [Maintenance].

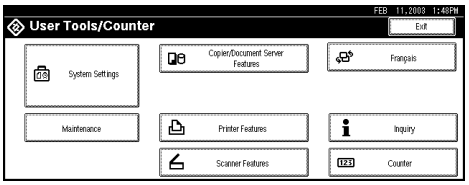

3 Press [Color Registration].

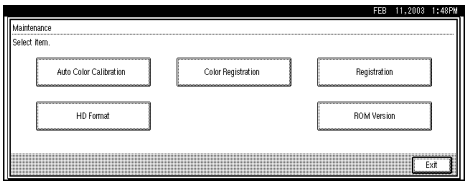

4 Press [Auto Color Registration].

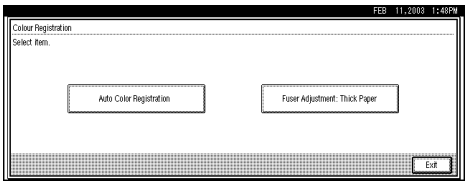

5 Press [OK].

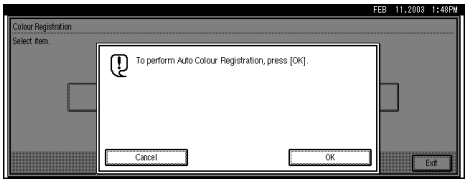

Auto adjustment will be started.

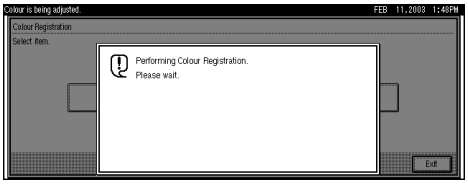

Important

- ❒ To avoid malfunction, do not turn off the power while "Color is Being adjusted." appears on the display.

Automatic color adjustment takes about 50 seconds. When it is completed, the display returns to the color registration menu.

6 When you have made all the settings, press the 【User Tools/Counter】 key.

The initial display appears.

Adjusting the Fuser for Thick Paper

If color registration shifts when using thick paper

If color registration shifts when using thick paper, adjust the fuser for thick paper.

Note

- ❒ Fuser adjustment for thick paper is not possible if the toner has almost run out. Carry out this adjustment after changing the toner cartridge.
- ❒ Thick paper is needed to make the adjustment. Use the thick paper you normally use.

1 **Load thick paper larger than A4▭ in the bypass tray.**

2 **Press the 【User Tools/Counter】key.**

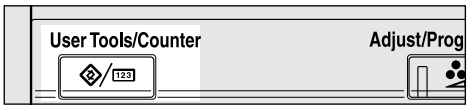

ZFLS110N

"User Tools/Counter" appears on the panel display.

3 **Press [Maintenance].**

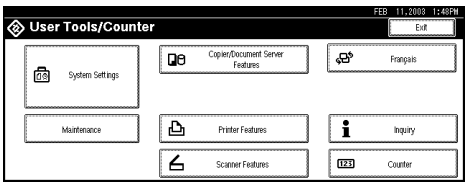

4 **Press [Color Registration].**

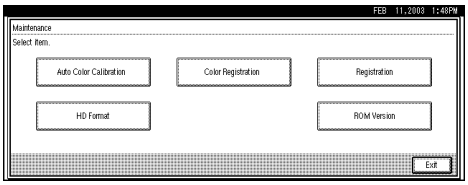

5 **Press [Fuser Adjustment: Thick Paper].**

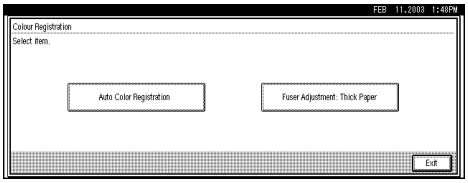

Limitation

- ❒ If the toner cartridge is almost empty, the following message appears on the display: (After changing the toner cartridge, carry out fuser adjustment for thick paper. For details about changing the toner cartridge, see p.2 "Replacing the Toner Cartridge".)

6 **Make sure the following message appears, and then press 【OK】.**

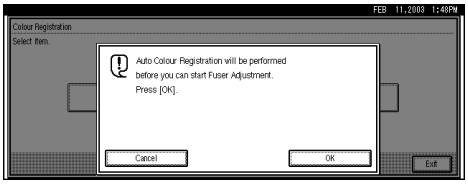

Fuser adjustment will be started.

7 **To print the Fuser Adjustment Sheet, make sure that A4 or larger paper is loaded in the Bypass Tray, and then press [Start Printing].**

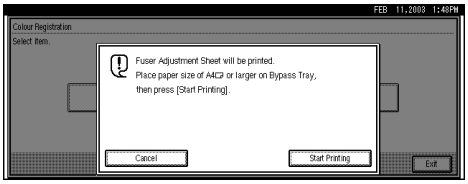

Fuser Adjustment Sheet is printed. See p.38 "Test Sheet Samples".

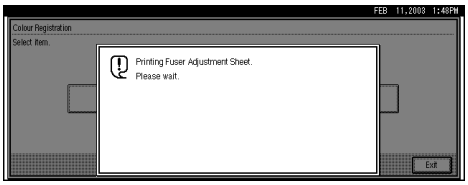

2

8 Compare the printed pattern with the white square in the printed Fuser Adjustment Sheet. Specify which square in the box matches the printed Fuser Adjustment Sheet.

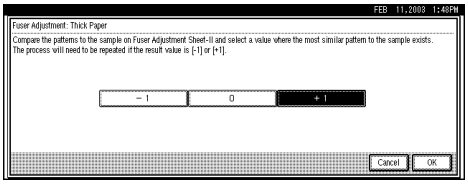

If you specify "0", setting is finished and the display that appeared in step **5** returns.

If you specify "-1" or "+1", the following display appears.

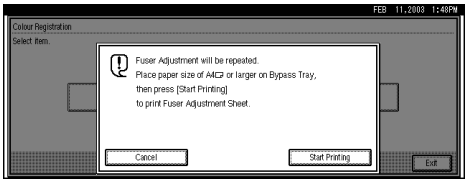

Press **[Start Printing]**. An adjusted Fuser Adjustment Sheet is printed and the display that appeared in step **8** reappears. Keep adjusting until the printed pattern looks the same as the printed pattern, and then specify "0".

9 After making all the settings, press the 【User Tools/Counter】 key.

The initial display appears.

Test Sheet Samples

The following illustration is an example of a test sheet printed during fuser adjustment for thick paper.

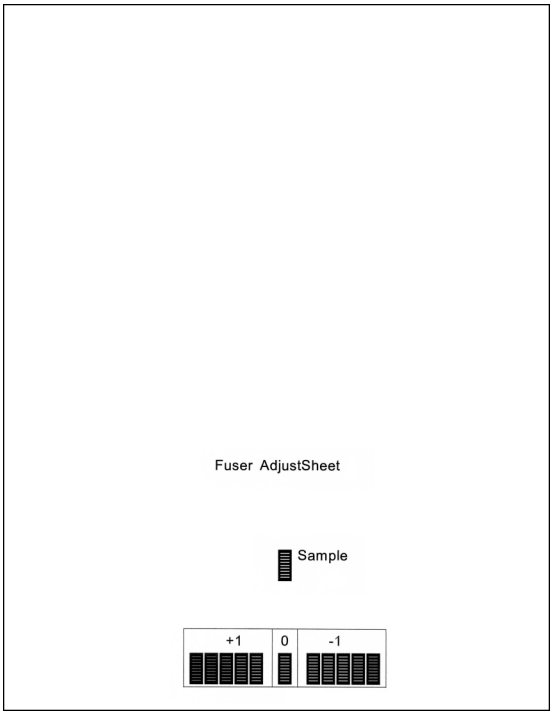

Adjusting the Color Calibration

The color calibration can change slightly as a result of a number of factors. For instance, the color may change after many prints have been made or after a new toner cartridge has been installed. If this happens, the machine can be made to produce the appropriate color by adjusting the color calibration. Normally, however, you do not need to do this.

Note

- ❒ Adjusting a printer's color calibration will affect the output of all users who use that printer.
- ❒ You cannot print the Test Pattern Sheet using paper loaded in the Bypass Tray.

Auto Color Calibration

In color calibration, this machine automatically adjusts the printed highlights and mid-tones.

Note

- ❒ The machine will not carry out Auto Color Calibration if the toner has almost run out.
- ❒ Use the same type of paper for each test pattern print. Inaccurate calibration can occur if different types of paper are used.

1 **Press the 【User Tools/Counter】 key.**

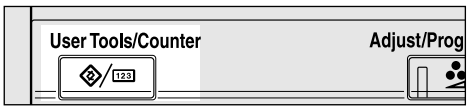

ZFLS110N

"User Tools/Counter" appears on the panel display.

2 **Press [Maintenance].**

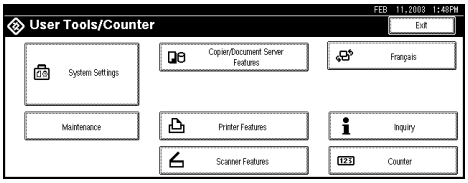

3 **Press [Auto Color Calibration].**

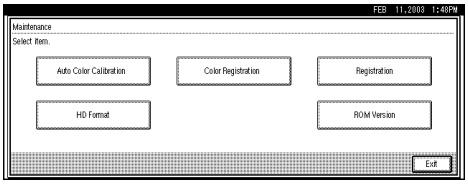

4 **When adjusting the color calibration in copy mode, press [Start] to the right of [Copier Function]. When adjusting the color calibration in printer mode, press [Start] to the right of [Printer Function].**

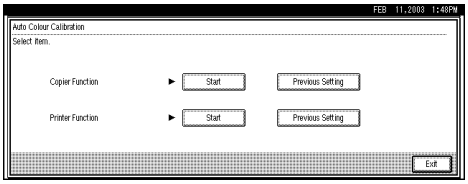

5 **Print the Test Pattern.**

If you have selected the color calibration in copy mode, go to step ❶.

If you have selected the color calibration in printer mode, the resolution selection display appears. In this case, go to step ❷.

2

❶ **If you have selected the color calibration in copy mode, the following display appears. Press [Start Printing].**

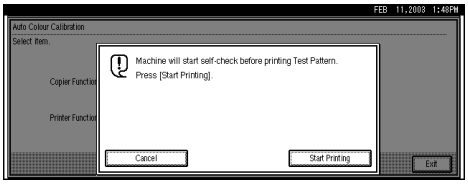

❷ **If you have selected the color calibration in printer mode, the following display appears. Select [600 x 600 dpi], [1200 x 600 dpi], or [1200 x 1200 dpi] as the resolution for color calibration, and then press [Start Printing].**

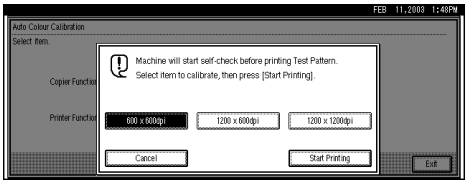

The test pattern will be printed.

Note

❒ Immediately after selecting **[Start Printing]** from this menu, a self-check starts. Wait a few minutes for the test pattern to be printed.

Important

❒ If the toner has almost run out, the message "Test Pattern could not be printed. Print it again." appears on the control panel and the machine does not carry out Auto Color Calibration. Make sure there is sufficient toner for Auto Color Calibration. If there is not, replace the cartridge. See p.2 “Replacing the Toner Cartridge”.

6 Place the printed arrow of the test pattern sheet at the left corner of the exposure glass with the printed side down.

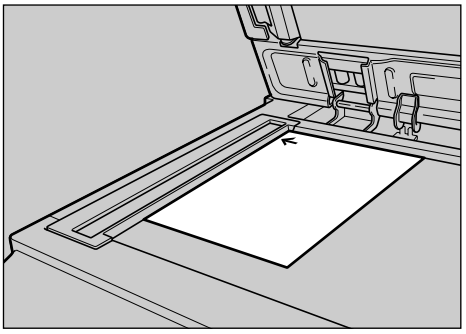

ZFQC030J

7 Press [Start Scanning].

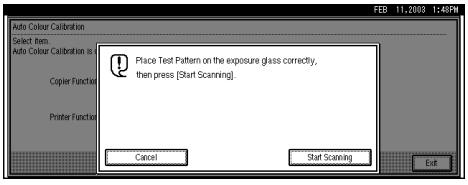

Adjustment of the color calibration starts.

Note

❒ If the sheet is not loaded properly, the following message appears.

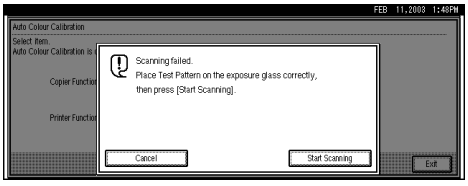

8 When all the settings have been made, press the 【User Tools/Counter】 key.

The initial display appears.

Verifying the Test Pattern Sheet

This is the test pattern sheet that is printed out when carrying out Auto Color Calibration. Place the printed arrow of the sheet at the left corner of the exposure glass and scan the sheet to automatically start color calibration.

❖ Test Pattern Sheet for Copy Mode

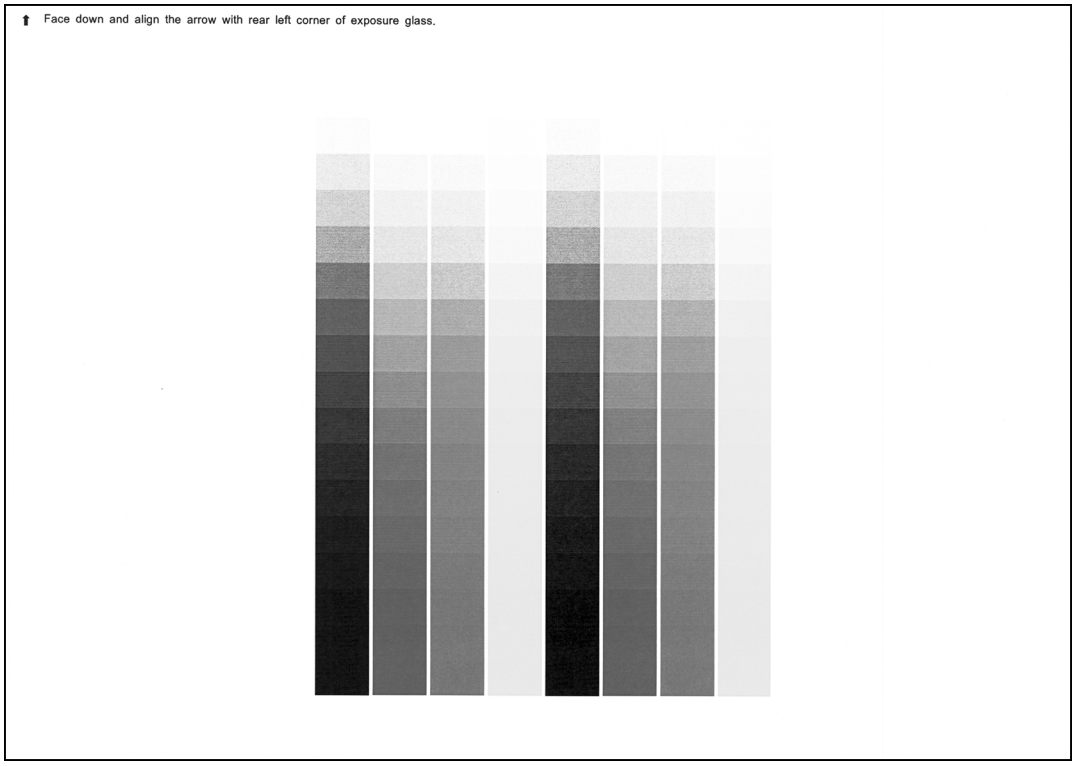

❖ Test Pattern Sheet for Printer Mode

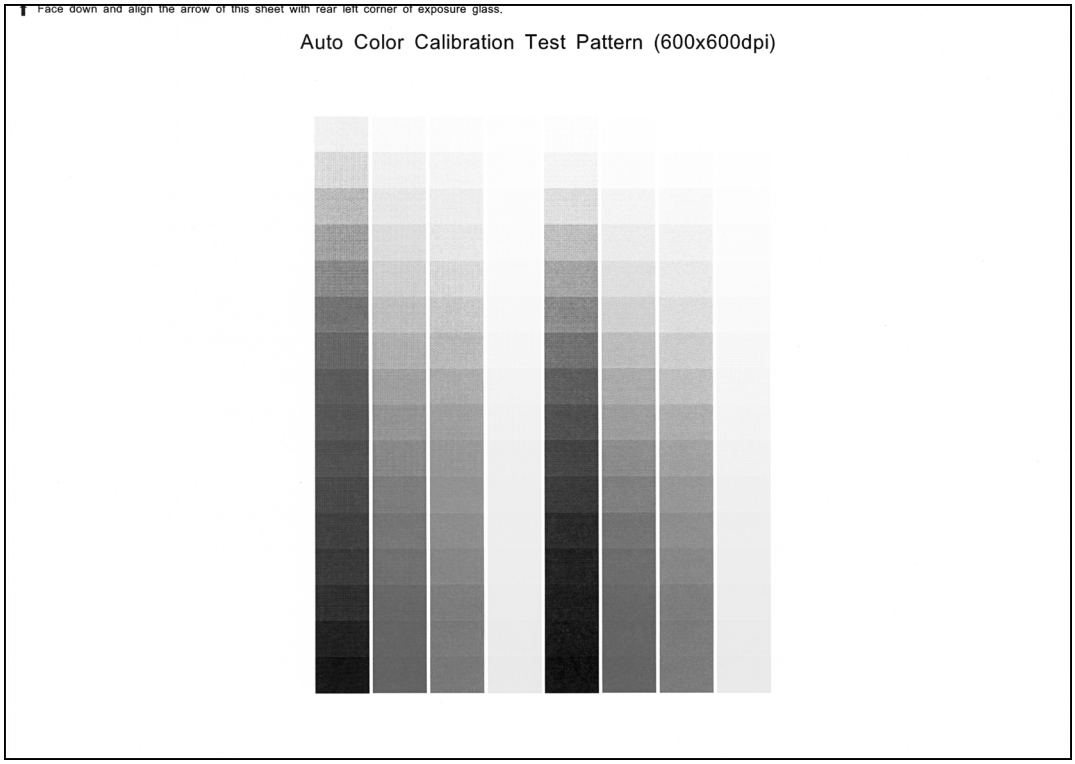

Restoring Previous Color Calibration Settings

You can restore previous color calibration settings.

1 Press the 【User Tools/Counter】key.

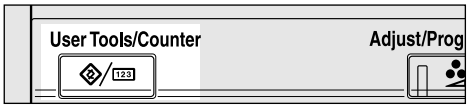

ZFLS110N

"User Tools/Counter" appears on the panel display.

2 Press [Maintenance].

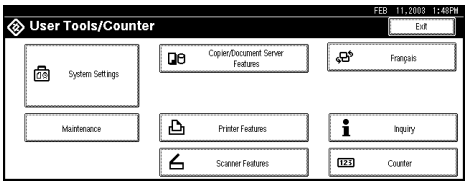

3 Press [Auto Color Calibration].

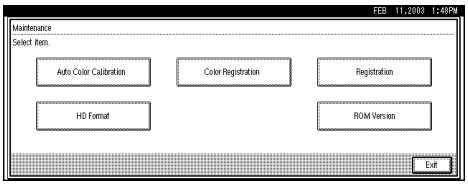

4 To restore previous color calibration settings in copy mode, press [Previous Setting] to the right of [Copier Function]. To restore previous color calibration settings in printer mode, press [Previous Setting] to the right of [Printer Function].

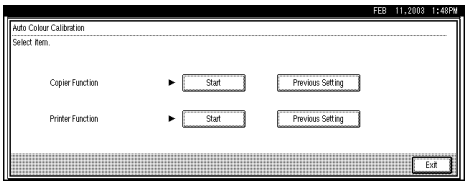

If you have selected the color calibration in copy mode, go to step ❶.

If you have selected the color calibration in printer mode, the resolution selection display appears. In this case, go to step ❷.

❶ **When restoring previous color calibration settings in copy mode, the display shown below appears. Press [Yes].**

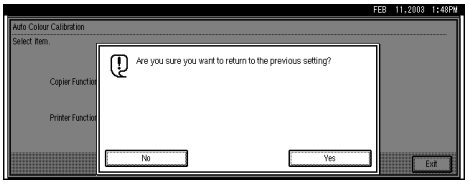

❷ **When restoring previous color calibration settings in printer mode, the display shown below appears. Select [600 x 600 dpi], [1200 x 600 dpi], or [1200 x 1200 dpi] as the resolution for color calibration, and then press [Yes].**

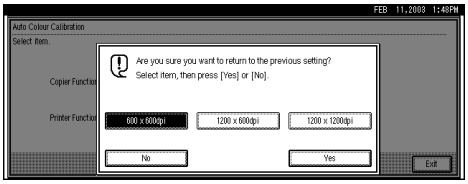

5 **When all the settings have been made, press the 【User Tools/Counter】 key.**

The initial display appears.

Adjusting Tray Registration

You can adjust the registration of each tray. The vertical adjustment is used for all trays. Normally, you need not update the registration. But when the optional paper feed unit or the duplex unit is installed, updating is useful in some cases. The following procedure describes how to adjust Tray 3. The same procedure applies to other trays as well.

1 Press the 【User Tools/Counter】key.

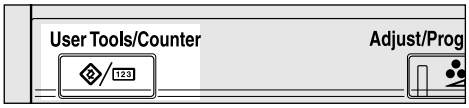

ZFLS110N

"User Tools/Counter" appears on the panel display.

2 Press [Maintenance].

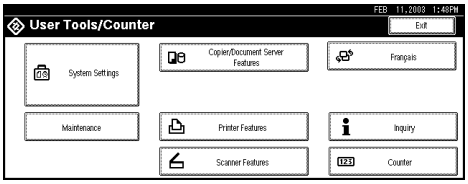

3 Press [Registration].

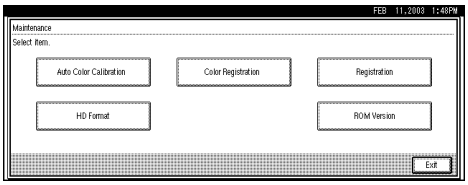

4 Print the test sheet to preview the registration.

❶ Press [Print Test Sheet].

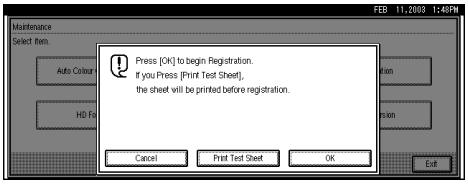

❷ Press [Tray 3], [Tray 4] or [Back of 2-Sided] to select the tray you want to adjust the registration for.

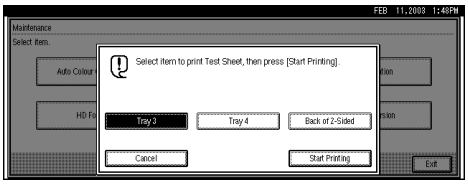

❸ Press [Start Printing].

5 Select the item to adjust.

❶ Press [OK].

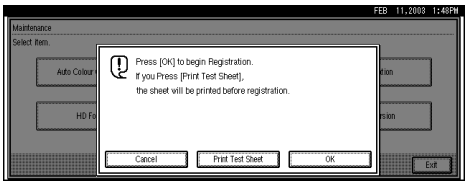

❷ Press [Tray 3], [Tray 4] or [Back of 2-Sided] to select the tray you want to adjust the registration for.

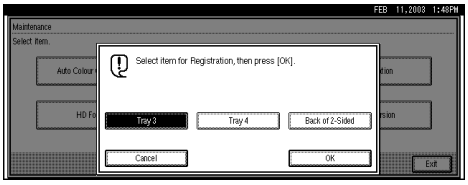

❸ Press [OK].

6 Check the position of the image on the test sheet, and then adjust the registration.

Note

❒ When checking the registration, use the feeding direction as a reference. Since the feeding direction is the same as the delivery direction, be sure to check the delivery direction.

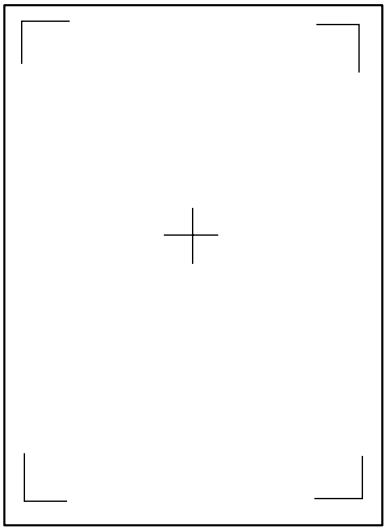

The following procedure makes the margins on the Print Test Sheet equal.

❶ **Press [↑] or [↓] to increase or decrease the registration value (mm).**

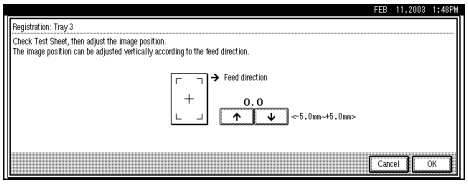

Note

❒ Increase the value to shift the print area in a positive direction; decrease to shift in a negative direction.

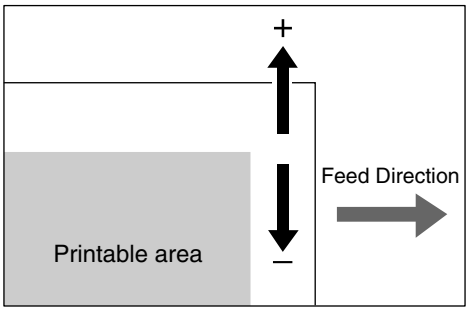

ZDJX900J

Pressing [↑] or [↓] makes the value increase or decrease in increments of 0.1 mm.

❷ **Press [OK].**

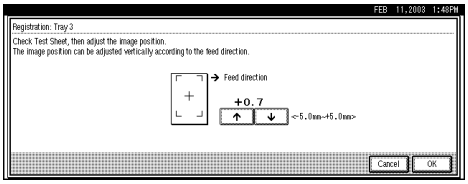

The display returns to the one that appeared in step 4.

7 Print the Print Test Sheet in the same way as in step 4, and then check whether the registration is correct or not.

Note

❒ If the registration is still not correct, repeat the procedure from step 5.

8 If the registration is correct, press [Cancel].

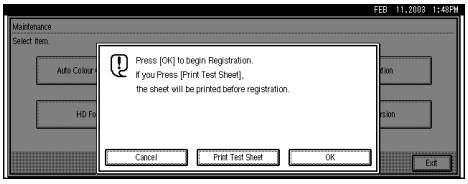

9 After making all the settings, press the 【User Tools/Counter】 key.

The initial display appears.

Sizes and Weights of Recommended Originals

❖ Metric version

Where Original Is Placed	Original Size	Original Weight
Exposure glass	Up to A3	--
Document feeder	1-sided originals: A3 – B6	40 – 128g/m^2
	2-sided originals: A3 – A5	52 – 105g/m^2

❖ Inch version

Where Original Is Placed	Original Size	Original Weight
Exposure glass	Up to 11" × 17"	--
Document feeder	1-sided originals: 11" × 17" – $5^1/_2$" × $8^1/_2$"	11 – 34 lb.
	2-sided originals: 11" × 17" – $5^1/_2$" × $8^1/_2$"	14 – 28 lb.

Note

- ❒ The number of originals that can be placed in the document feeder is about 80.
- ❒ The weight range for originals in the Mixed Size mode is 52-81g/m^2, 13.8-21.5 lb.

Non-recommended originals for the document feeder

Placing the following types of originals in the document feeder can cause paper misfeeds or result in damage to the originals. Place these originals on the exposure glass instead.

- Originals other than those specified in p.47 “Sizes and Weights of Recommended Originals”
- Stapled or clipped originals
- Perforated or torn originals
- Curled, folded, or creased originals
- Pasted originals
- Originals with any kind of coating, such as thermal fax paper, art paper, aluminum foil, carbon paper, or conductive paper
- Originals with perforated lines
- Originals with indexes, tags, or other projecting parts
- Sticky originals such as translucent paper
- Thin originals that have low stiffness
- Thick originals such as postcards
- Originals of inappropriate weight
- Bound originals such as books
- Transparent originals such as OHP transparencies or translucent paper
- Originals that have correction fluid or ink on them that has not completely dried

Sizes Detectable by the Auto Paper Select

❖ Metric version

Size / Location of the original	A3	B4	A4	B5	A5	11" × 17"	$8^1/_2$"× 14"	$8^1/_2$"× 11"	$5^1/_2$"× $8^1/_2$"	$8^1/_2$"× 13" *1
Exposure glass	❍	❍	❍	❍	×	×	❍	×	×	❍
Document feeder	❍	❍	❍	❍	❍	×	×	×	×	❍

*1 You can select from $8^1/_2$" × 13",$8^1/_4$" × 13" or 8" × 13" with the User Tools (System Settings). See Copy Reference <Advanced Features>.

❖ Inch version

Size / Location of the original	A3	B4	A4	A4	B5	A5	11"× 17"	$8^1/_2$" × 14"	$8^1/_2$" × 11"	$5^1/_2$" × $8^1/_2$"	$8^1/_2$" × 13"	8" × 10"	10"× 14"
Exposure glass	×	×	×	×	×	×	❍	❍	❍	×	×	❍	❍
Document feeder	❍	×	❍	×	×	×	❍	❍	❍	❍	×	×	❍

Sizes difficult to detect

It is difficult for the machine to detect the sizes of the following originals, so select the paper size manually.

- Originals with indexes, tags, or other projecting parts
- Transparent originals such as OHP transparencies or translucent paper
- Dark originals with a lot of text and drawings
- Originals which partially contain a solid image
- Originals which have solid images at their edges

Missing Image Area

❖ Exposure glass

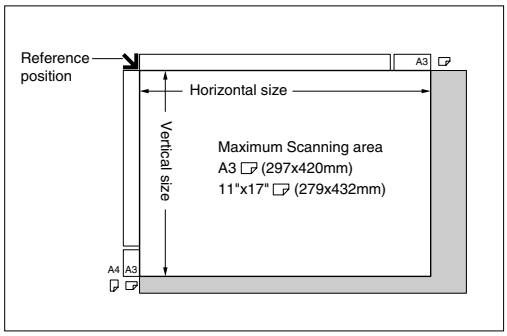

CP01AEE

❖ Document feeder

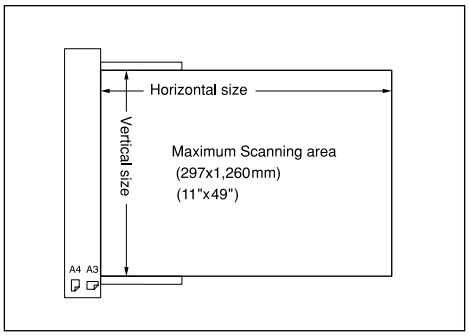

CP02AEE

Limitation

- ❒ Even if you correctly place originals in the document feeder or on the exposure glass, 3mm (0.1") margins on all four sides of the original might not be copied.
- ❒ Make sure the original is placed correctly so that it is fed straight.
- ❒ When placing paper 433mm or larger in the document feeder (ADF), there are cases when the paper will be jammed, creased, or not fed.
- ❒ The maximum value for the system length setting is 1260mm (49").

Paper and Other Supported Media

Paper Sizes

This section describes the type, size, feed direction, and maximum amount of paper that can be loaded into each tray.

Note

❒ The following symbols and terminology are used to represent the feed direction.

In this manual	On the display	Paper feed direction
← (Feed direction)	A4 (210 × 297) 8 1/2 × 11	Short-edge feed direction
← (Feed direction)	A4 (297 × 210) 11 × 8 1/2	Long-edge feed direction

❒ Be careful of the paper feed direction. The direction is determined based on paper size.

❖ Input Paper Sizes (Metric version)

	Feed direction	Size (mm)	Bypass tray	Paper tray (Tray 1)	Paper feed unit (Tray 2/3/4)	2000-sheet Large Capacity Tray
A3		297 × 420	☆	×	◎	×
B4 JIS		257 × 364	☆	×	◎	×
A4		210 × 297	☆	×	◎	×
		297 × 210	☆	●	◎	◎
B5 JIS		182 × 257	☆	×	☆	×
		257 × 182	☆	×	◎	×
A5		148 × 210	☆	×	×	×
		210 × 148	☆	×	◎	×
B6 JIS		128 × 182	★	×	×	×
A6		105 × 148	☆	×	×	×
11″ × 17″		279 × 432	☆	×	◎	×

	Feed direction	Size (mm)	Bypass tray	Paper tray (Tray 1)	Paper feed unit (Tray 2/3/4)	2000-sheet Large Capacity Tray
Legal (LG, $8^1/_2'' \times 14''$)	▭	216 × 356	☆	×	☆	×
Letter (LT, $8^1/_2'' \times 11''$)	▭	216 × 279	☆	×	☆	×
	▯	279 × 216	☆	×	◎	×
$5^1/_2'' \times 8^1/_2''$	▭	140 × 216	☆	×	×	×
Executive (Exec., $7^1/_4'' \times 10^1/_2''$)	▭	184 × 276	☆	×	☆	×
	▯	276 × 184	☆	×	×	×
Folio ($8^1/_4'' \times 13''$)	▭	210 × 330	☆	×	☆	×
Foolscap (F4, $8^1/_2'' \times 13''$)	▭	216 × 330	☆	×	☆	×
F/GL ($8'' \times 13''$)	▭	203 × 330	☆	×	☆	×
Com#10 Env ($9^1/_2'' \times 4^1/_8''$)	▯	241.3 × 104.8	☆	×	×	×
C5 Env ($9.02'' \times 6.38''$)	▯	229 × 162	☆	×	×	×
C6 Env ($6.38'' \times 4.49''$)	▯	162 × 114	☆	×	×	×
DL Env ($8.66'' \times 4.33''$)	▯	220 × 110	☆	×	×	×
Monarch Env ($7^1/_2'' \times 3^7/_8''$)	▯	190.5 × 98.4	☆	×	×	×
Custom Size	-	-	★*	×	×	×
8K ($10^1/_2'' \times 15.35''$)	▭	267 × 390	☆	×	☆	×
16K ($7.68'' \times 10^1/_2''$)	▭	195 × 267	☆	×	☆	×
	▯	267 × 195	☆	×	☆	×

- ● The size is exclusive.
- ◎ The size is supported and the printer selects it automatically.
- ☆ The size is supported, but it should be selected using the control panel.
- ★ The size is supported, but it should be set as a custom size using the control panel.
- ★* The supported size is approximately 90 - 305 mm in width, and 148 - 457 mm in length. The supported size may differ depending on the printer language you use. Set as a custom size setting using the control panel.
  When using the RPCS™ printer driver, sheets of up to 1260 mm in length can be set.
- × The size is not supported.

❖ Input Paper Sizes (Inch version)

	Feed direction	Size (inch)	Bypass tray	Paper tray (Tray 1)	Paper feed unit (Tray 2/3/4)	2000-sheet Large Capacity Tray
11″ × 17″	▭	11″ × 17″	☆	×	◎	×
Legal (LG)	▭	$8^1/_2$″ × 14″	☆	×	◎	×
Letter (LT)	▭	$8^1/_2$″ × 11″	☆	×	◎	×
	▯	11″ × $8^1/_2$″	☆	●	◎	◎
$5^1/_2$″ × $8^1/_2$″	▭	$5^1/_2$″ × $8^1/_2$″	☆	×	×	×
Executive (Exec.)	▭	$7^1/_4$″ × $10^1/_2$″	☆	×	☆	×
	▯	$10^1/_2$″ × $7^1/_4$″	☆	×	×	×
A3	▭	11.26″ × 16.54″	☆	×	◎	×
B4 JIS	▭	10.12″ × 14.33″	☆	×	◎	×
A4	▭	8.26″ × 5.83″	☆	×	◎	×
	▯	5.83″ × 8.26″	☆	●	◎	×
B5 JIS	▭	7.17″ × 10.12″	☆	×	☆	×
	▯	10.12″ × 7.17″	☆	×	◎	×
A5	▭	5.83″ × 8.26″	☆	×	×	×
	▯	8.26″ × 5.83″	☆	×	◎	×
B6 JIS	▭	5.04″ × 7.17″	★	×	×	×
A6	▭	4.13″ × 5.63″	☆	×	×	×
Folio	▭	13″ × $8^1/_4$″	☆	×	☆	×
Foolscap F4	▯	13″ × $8^1/_2$″	☆	×	☆	×
F/GL	▯	13″ × 8″	☆	×	☆	×
Com#10 Env	▯	$9^1/_2$″ × $4^1/_8$″	☆	×	×	×
C5 Env	▯	9.02″ × 6.38″	☆	×	×	×
C6 Env	▯	6.38″ × 4.49″	☆	×	×	×
DL Env	▯	8.66″ × 4.33″	☆	×	×	×
Monarch Env	▯	$7^1/_2$″ × $3^7/_8$″	☆	×	×	×
Custom Size	-	-	★*	×	×	×
8K	▭	$10^1/_2$″ × 15.35″	☆	×	☆	×
16K	▭	7.68″ × $10^1/_2$″	☆	×	☆	×
	▯	$10^1/_2$″ × 7.68″	☆	×	☆	×

4

- ● The size is exclusive.
- ◎ The size is supported, and the printer selects it automatically.
- ☆ The size is supported, but it should be selected using the control panel.
- ★ The size is supported, but it should be set as a custom size using the control panel.
- ★* The supported size is approximately 3.5 - 12 inch in width, and 5.8 - 18 inch in length. The supported size may differ depending on the printer language you use. Set as a custom size setting using the control panel.
  When using the RPCS printer driver, sheets of up to 49.6 inch in length can be set.
- × The size is not supported.

❖ Paper weight and number of sheets to be set

	Supported paper weight	Maximum number of sheets (plain paper) *1
Tray 1	60 - 105 g/m^2 (16 - 28 lb)	500 (80 g/m^2, 20 lb)
Tray 2	60 - 105 g/m^2 (16 - 28 lb)	500 (80 g/m^2, 20 lb)
Bypass tray	60 - 163 g/m^2 (14 - 42 lb)	100 (80 g/m^2, 20 lb)
Paper Feed Unit Type 3800C (500 × 1)	60 - 105 g/m^2 (16 - 28 lb)	500 (80 g/m^2, 20 lb)
Paper Feed Unit Type 3800C (500 × 2)	60 - 105 g/m^2 (16 - 28 lb)	1000 (80 g/m^2, 20 lb)
Paper bank PS470 (2000-sheet Large Capacity Tray)	60 - 105 g/m^2 (16 - 28 lb)	2000 (80 g/m^2, 20 lb)
SR770 (2 tray finisher)	60 - 105 g/m^2 (16 - 28 lb)	2000 (80 g/m^2, 20 lb)

*1 Check that the top of the stack is not higher than the limit mark inside the tray.

❖ Output Paper Sizes (Metric version)

	Feed direction	Size (mm)	Standard tray	External tray *1	2 tray finisher	Multi-bin
A3	▭	297 × 420	○	○	○	○
B4 JIS	▭	257 × 364	○	○	○	○
A4	▭	210 × 297	○	○	○	○
	▯	297 × 210	○	○	○	○
B5 JIS	▭	182 × 257	○	○	○	○
	▯	257 × 182	○	○	○	○
A5	▭	148 × 210	○	○	×	×

	Feed direction	Size (mm)	Standard tray	External tray *1	2 tray finisher	Multi-bin
	▯	210 × 148	○	○	○	○
B6 JIS	▭	128 × 182	○	○	×	×
A6	▭	105 × 148	○	○	×	×
11″ × 17″	▭	279 × 432	○	○	○	○
Legal (LG, $8^1/_2$″ × 14″)	▭	216 × 356	○	○	○	○
Letter (LT, $8^1/_2$″ × 11″)	▭	216 × 279	○	○	○	○
	▯	279 × 216	○	○	○	○
$5^1/_2$″ × $8^1/_2$″	▭	140 × 216	○	○	×	×
Executive (Exec., $7^1/_4$″ × $10^1/_2$″)	▭	184 × 276	○	○	○	○
	▯	276 × 184	○	○	×	×
Folio ($8^1/_4$″ × 13″)	▭	210 × 330	○	○	○	○
Foolscap (F4, $8^1/_2$″ × 13″)	▭	216 × 330	○	○	○	○
F/GL (8″ × 13″)	▭	203 × 330	○	○	○	○
Com#10 Env ($9^1/_2$″ × $4^1/_8$″)	▯	241.3 × 104.8	×	○	×	○
CA Env (9.02″ × 6.38″)	▯	229 × 162	×	○	×	×
C6 Env (6.38″ × 4.49″)	▯	162 × 114	×	○	×	×
DL Env (8.66″ × 4.33″)	▯	220 × 110	×	○	×	×
Monarch Env ($7^1/_2$″ × $3^7/_8$″)	▯	190.5 × 98.4	×	○	×	×
Custom Size	-	-	○	○	×	×
8K ($10^1/_2$″ × 15.35″)	▭	267 × 390	○	○	○	×
16K (7.68″ × $10^1/_2$″)	▭	195 × 267	○	○	○	×
	▯	267 × 195	○	○	○	×

- ○ The size is supported.
- × The size is not supported.

*1 The external tray does not support duplex printing.

❖ Output Paper Sizes (Inch version)

	Feed direction	Size (inch)	Standard tray	External tray *1	2 tray finisher	Multi-bin
11″ × 17″	▭	11″ × 17″	○	○	○	○
Legal (LG)	▭	$8^1/_2$″ × 14″	○	○	○	○
Letter (LT)	▭	$8^1/_2$″ × 11″	○	○	○	○
	▯	11″ × $8^1/_2$″	○	○	○	○
$5^1/_2$″ × $8^1/_2$″	▭	$5^1/_2$″ × $8^1/_2$″	○	○	×	×
Executive (Exec.)	▭	$7^1/_4$″ × $10^1/_2$″	○	○	○	○
	▯	$10^1/_2$″ × $7^1/_4$″	○	○	×	×
A3	▭	11.26″ × 16.54″	○	○	○	○
B4 JIS	▭	10.12″ × 14.33″	○	○	○	○
A4	▭	8.26″ × 5.83″	○	○	○	○
	▯	5.83″ × 8.26″	○	○	○	○
B5 JIS	▭	7.17″ × 10.12″	○	○	○	○
	▯	10.12″ × 7.17″	○	○	○	○
A5	▭	5.83″ × 8.26″	○	○	×	×
	▯	8.26″ × 5.83″	○	○	○	○
B6 JIS	▭	5.04″ × 7.17″	○	○	×	×
A6	▭	4.13″ × 5.63″	○	○	×	×
Folio	▭	$8^1/_4$″ × 13″	○	○	○	○
Foolscap F4	▭	$8^1/_2$″ × 13″	○	○	○	○
F/GL	▭	8″ × 13″	○	○	○	○
Com#10 Env	▯	$9^1/_2$″ × $4^1/_8$″	×	○	×	○
C6 Env	▯	6.38″ × 4.49″	×	○	×	×
C5 Env	▯	9.02″ × 6.38″	×	○	×	×
DL Env	▯	8.66″ × 4.33″	×	○	×	×
Monarch Env	▯	$7^1/_2$″ × $3^7/_8$″	×	○	×	×
Custom Size	-	-	○	○	×	×
8K	▭	$10^1/_2$″ × 15.35″	○	○	○	×
16K	▭	7.68″ × $10^1/_2$″	○	○	○	×
	▯	$10^1/_2$″ × 7.68″	○	○	○	×

- ○ The size is supported and it should be set using the control panel. There is no dial in the tray.
- × The size is not supported.

*1 The external tray does not support duplex printing.

Paper Recommendations

Loading Paper

Important

- ❒ Do not use ink-jet printer paper because it may stick to the fusing unit and cause a paper misfeed.
- ❒ When printing on OHP transparencies that have a print side, load them with the print side over on the bypass tray. Not taking this precaution may cause them to stick to the fusing unit and cause misfeeds.
- ❒ Print quality cannot be guaranteed if recommended paper is not used. For details about recommended paper, contact your sales or service representative.
- ❒ Do not use paper that has already been printed onto by other printers.

Storing Paper

- Paper should always be stored properly. Improperly storing paper might result in poor print quality, paper misfeeds, or printer damage. Recommendations are as follows:
  - Avoid storing paper in humid areas.
  - Avoid exposing paper to direct sunlight.
  - Store paper on a flat surface.
- Keep open reams of paper in the packaging it came in.

Types of Paper and Other Media

❖ Plain Paper

- Tray 1/2 can hold up to 500 sheets.
  Paper Feed Unit Type 3800C (500×1) can hold up to 500 sheets.
  Paper Feed Unit Type 3800C (500×2) can hold up to 1000 sheets.
  Paper Bank PS470 can hold up to 2000 sheets.
  Check that the top of the stack is not higher than the limit mark inside the tray.
- The bypass tray can accommodate sheets 90-305 mm wide and 148-457 mm long. However, the paper size must be set using the control panel. When using the RPCS printer driver, sheets of up to 1260 mm in length can be set.
- When printing on the reverse side of plain paper that is already printed on, you should load it on the bypass tray and select **[Plain (Duplex Backside)]** from **[Paper Type:]** using the printer driver.

❖ Thick Paper

- Use the bypass tray
- The bypass tray can hold up to 135 kg (163 g/m^2) of paper weight. Print quality on thicker paper cannot be guaranteed.
- Check that the top of the stack is not higher than the limit mark inside the tray.
- When printing on thick paper, select thick paper mode using the printer driver.
- When printing on the reverse side of plain paper that is already printed on, you should load it on the bypass tray and select **[Thick (Duplex Backside)]** from **[Paper Type:]** using the printer driver.

Note

❒ The number of sheets that can be set may vary depending on paper thickness and type.

❖ OHP transparencies

- When printing on OHP transparencies, use the bypass tray.
- Load OHP transparencies on the tray with the print side over, otherwise they may stick to the fusing unit and cause a misfeed.
- Remove unused OHP transparencies from the bypass tray after you are finished printing. They may stick together if left in the tray.
- When printing on OHP transparencies, you should select the OHP transparency mode using the printer driver.
- Check that the top of the stack is not higher than the limit mark inside the tray.
- When printing multiple OHP transparencies, remove each sheet from the tray one by one before the next is printed out, or select **[Slip Sheet]** in the printer driver. For details about using "Slip Sheet", see the printer driver Help.

❖ Envelopes

Important

❒ Only envelopes ① and ② as shown below are supported.

① 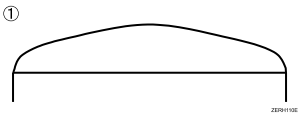	Supported *1
② 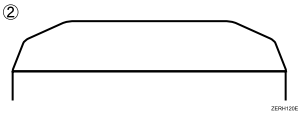	Supported *1
③ 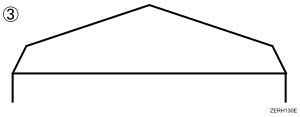	Not supported

*1 Misfeeds might also occur when using envelopes ① and ② depending on the length and shape of the flaps.

- When printing on envelopes, use the bypass tray, and select **[Thick Paper]** as the paper type on the Paper Input menu on the control panel.
  See p.70 "Specifying a paper type for the Bypass Tray".
- Specifications for envelopes are as follows:

	Metric version	Inch version
Weight	72 - 90 g/m^2	19 - 24 lb
Recommended weight and size	72 g/m ^{2}, 114 × 162 mm (C6 Env)	24 lb, $3^7/_8$" × $7^1/_2$" (Monarch)

- You can load up to 10 envelopes (72 - 92 g/m^2, 19 - 24 lb) in the bypass tray at the same time, without compressing them. Check the envelopes are not damp, and the top of the stack is not higher than the limit mark on the side guide.
- Check the print side is facing up when loading onto the bypass tray.
- When loading envelopes, be sure to unfold the flaps and position them opposite to the paper feed direction.

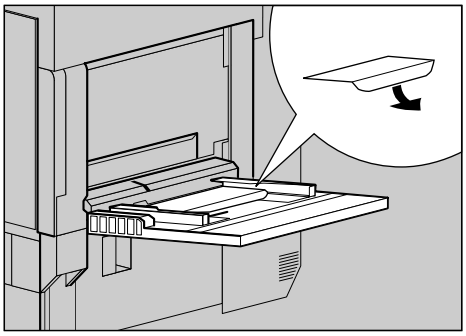

ZGBH020N

- Make the printer driver setting for rotating the print image by 180 degrees. For details, see the printer driver Help.
- Check there is no air in the envelopes before loading.
- To get better print quality, it is recommended that you set the right, left, top, and bottom print margin, to at least 15 mm (0.6") each.
- Do not print on both sides of envelopes.
- Load only one size and type of envelope at a time.
- Before loading envelopes, flatten leading edges (the side going into the printer) by pressing a pencil or ruler across them.
- Before loading envelopes, check they are rectangular in shape.
- Supported sizes for envelopes are listed on p.51 "Paper and Other Media".

❖ Paper not supported by this printer

Avoid using the following unsupported types of paper:

- Ink-jet printer paper
- Bent, folded, or creased paper
- Curled or twisted paper
- Torn paper
- Wrinkled paper
- Damp paper
- Paper that is dry enough to emit static electricity
- Paper that has already been printed onto, except a preprinted letterhead paper
- Coated paper
- Special paper, such as thermal paper, aluminum foil, carbon paper, and conductive paper
- Paper whose weight is heavier or lighter than the limitation
- Paper with windows, holes, perforations, cutouts, or embossing
- Label paper on which glue or base paper is exposed
- Paper with clips or staples

Printable Area

The following illustration shows the printable area for this printer. Be sure to set the print margins correctly using your application.

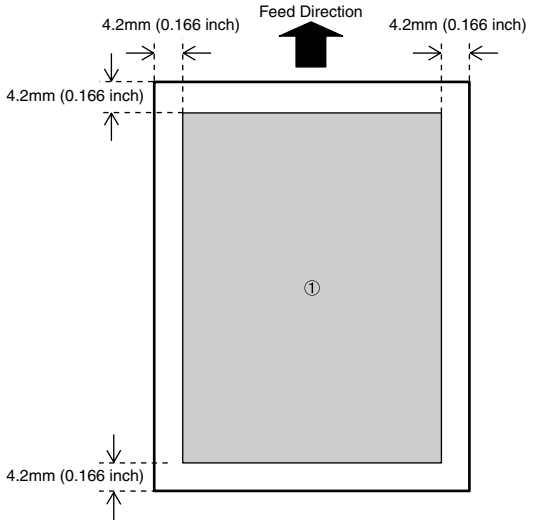

① : printable area

Note

- ❒ Printable area may vary depending on paper size, printer language, and printer driver settings.
- ❒ If you load paper larger than A3▱ in the bypass tray, hold it steady so it feeds properly. Paper feed accuracy and print quality may vary according to paper thickness and width. Do a test print to check the paper you want to use gives satisfactory results.
- ❒ The maximum length of the printable area is 457 mm in the paper feed direction (at 1200×1200 dpi).

Loading Paper

Load paper and change the paper size in Tray 1, Tray 2, and the optional paper feed unit by following the procedures below.

Important

- ❒ Tray 1 uses only 11 × 8 1/2 ▯ paper exclusively. Load 11 × 8 1/2 paper at all times.
- ❒ The 2000-sheet Large Capacity Tray uses only 11 × 8 1/2 ▯ paper exclusively. Load 11 × 8 1/2 paper at all times.
- ❒ If you want to load A4 ▯ paper in Tray 1 and the optional 2000-sheet Large Capacity Tray, contact your sales or service representative.

Reference

p.51 "Paper Sizes" for details about paper to be loaded in the paper tray and optional paper feed unit.

Loading Paper in Tray 1

Important

- ❒ Tray 1 uses only 11 × 8 1/2 ▯ paper exclusively. Load 11 × 8 1/2 paper at all times.
- ❒ If you want to load A4 ▯ paper in Tray 1, contact your sales or service representative.

1 **Slowly pull out the paper tray, until it stops.**

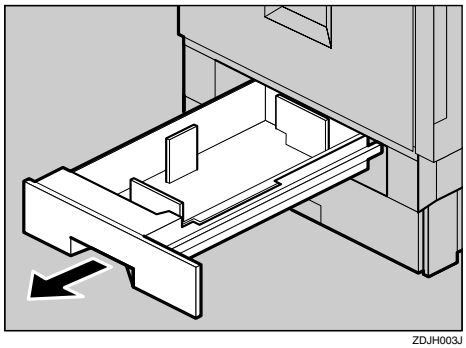

ZDJH003J

2 **Load paper into the tray with the print side down.**

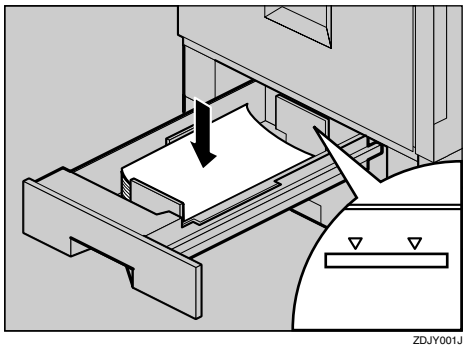

ZDJY001J

Important

- ❒ Check that the top of the stack is not higher than the limit mark inside the tray.

3 **Carefully slide the paper tray into the printer, until it stops.**

Loading Paper in Tray 2 and the Optional Paper Feed Unit

Paper of different sizes can be loaded in Tray 2 (standard) and the 500- and 1000-sheet paper feed units (optional) by adjusting the positions of the side and end guides.

This section describes loading paper in Tray 2 (standard).

Note

- ❒ If the side and end guides are in the right positions for the paper to be loaded, they do not have to be adjusted.

1 **Slowly slide the paper tray out, until it stops.**

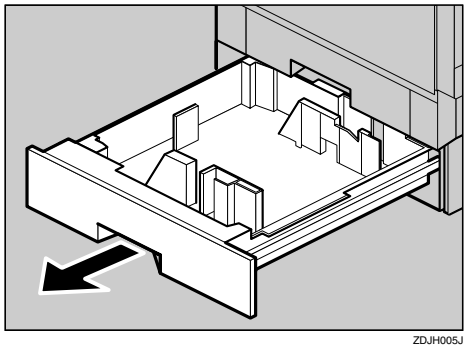

ZDJH005J

2 **Adjust the side guide according to the size and orientation of the paper as follows:**

❶ **Release the side guide lock.**

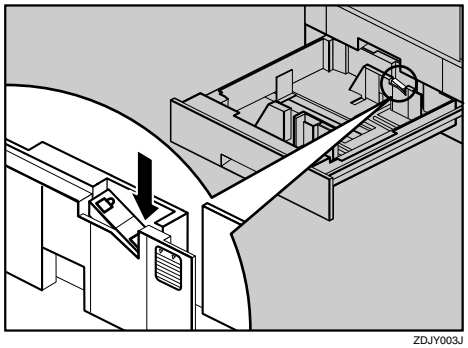

ZDJY003J

❷ **Press the side guide green lever (①), adjust the position of the guide by moving it in the direction of the arrow (②).**

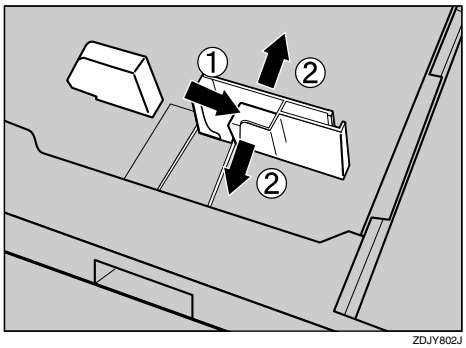

ZDJY802J

3 **Adjust the end guide according to the size and orientation of the paper by gripping both edges of the guide (①), and then moving it in the direction of the arrow (②).**

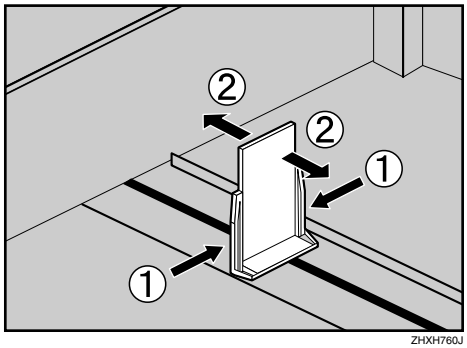

ZHXH760J

4 **Align all four sides of the paper stack, and then load it in the tray.**

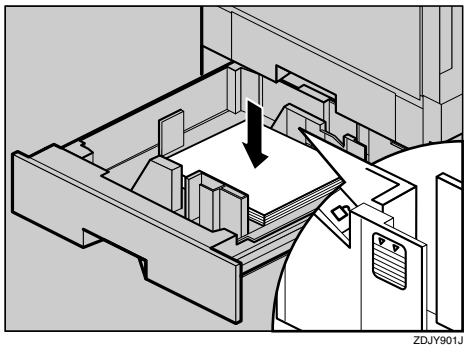

ZDJY901J

Important

- ❒ Check that the top of the stack is not higher than the limit mark inside the tray.

5 **Make sure the paper is fixed in place, and then lock the side guide.**

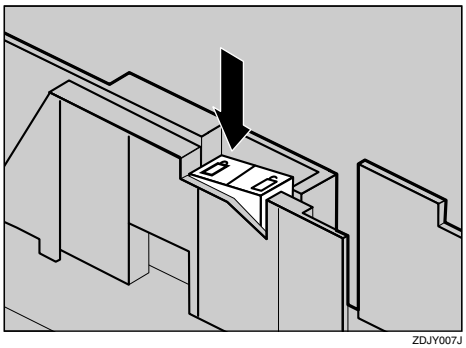

ZDJY007J

6 **Slowly slide the paper tray back until it stops.**

Important

- ❒ Do not slide the paper tray in with force. If you do, the front and side guides might move.
- ❒ Be sure to adjust the side guides to the paper size, or misfeeds might occur.

Loading paper in Paper Bank PS470 (2000-sheet Large Capacity Tray)

Important

- ❒ The 2000-sheet Large Capacity Tray uses only 11 × 8 $^{1}/_{2}$ ▯ paper exclusively. Load 11 × 8 $^{1}/_{2}$ paper at all times.
- ❒ If you want to load A4 ▯ paper in the 2000-sheet Large Capacity Tray, contact your sales or service representative.

1 **Slowly pull out the paper tray, until it stops.**

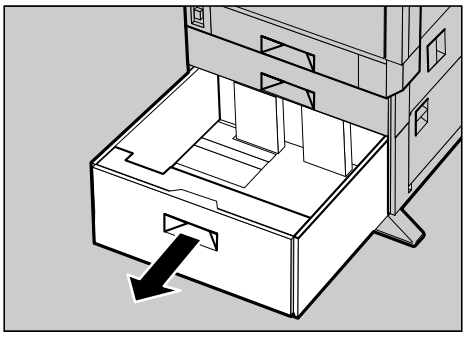

ZDJY008J

2 **With the print side down, align all four sides of the two paper stacks, and then load them next to each other in the tray. Each side has a limit of 1,000 sheets.**

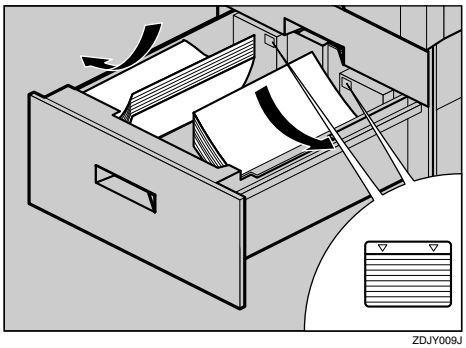

ZDJY009J

Important

- ❒ Align the paper and load the stacks against the left and right walls, or misfeeds might occur.
- ❒ Check that the top of the stack is not higher than the limit mark inside the tray.

3 **Slowly push in the paper tray until it stops.**

If you load a paper size that is not selected automatically

Note

- ❒ Paper sizes not selected automatically are B4▭, A4▯, B5▭, $8^1/_2 \times 11$▭, $7^1/_4 \times 10^1/_2$▭, 8×13▭, $8^1/_2 \times 13$▭, $8^1/_4 \times 13$▭, 8K ($10^1/_2 \times 15.35$)▭, 16K ($7.68 \times 10^1/_2$)▭, 16K ($10^1/_2 \times 7.68$)▯.

Reference

p.63 "Loading Paper in Tray 2 and the Optional Paper Feed Unit" for details about how to load the paper

Important

- ❒ Tray 1 uses only $11 \times 8\,^1/_2$▯ paper exclusively. Load $11 \times 8\,^1/_2$ paper at all times.
- ❒ Paper Bank PS470 uses only $11 \times 8\,^1/_2$▯ paper exclusively. Load $11 \times 8\,^1/_2$ paper at all times.
- ❒ If you want to load A4▯ paper in Tray 1 and the optional Paper Bank PS470, contact your sales or service representative.

1 Press the 【User Tools/Counter】 key.

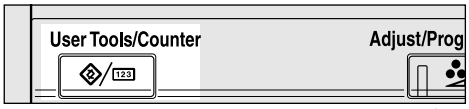

ZFLS110N

2 Press [System Settings].

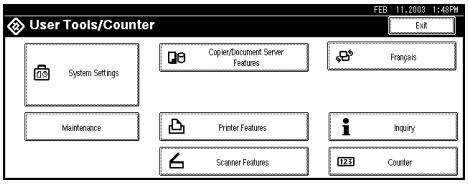

3 Press [Tray Paper Settings].

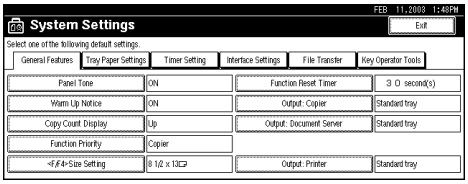

4 Select the tray for which you want to change the paper settings.

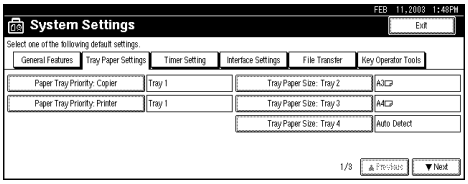

Note

- ❒ When the optional paper trays are installed, **[Tray Paper Size: Tray 3]** and **[Tray Paper Size: Tray 4]** are displayed.
  - ① When the Paper Feed Unit Type 3800C (500 × 2) is installed
  - ② When the Paper Feed Unit Type 3800C (500 × 1) is installed
  - ③ When the Paper Bank PS470 (2000-sheet Large Capacity Tray) is installed

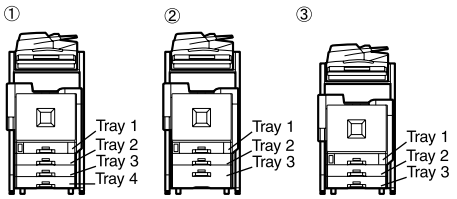

ZFQC040E

4

5 **Select the loaded paper size and feed direction, and then press [OK].**

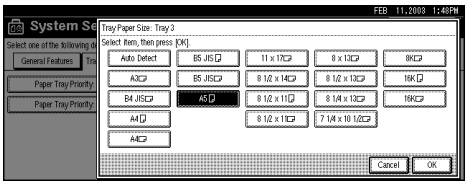

The set paper size and feed direction is displayed.

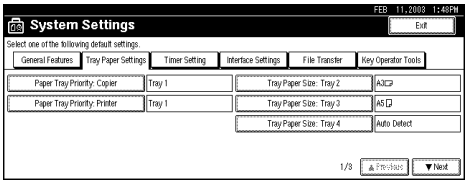

6 **Press the 【User Tools/Counter】 key.**

The initial display appears.

Important

- ❒ After printing on a paper size that is not selected automatically, if you want to print on paper that is selected automatically again, reload the paper, proceed to step **1** to **4**, and select "Auto Detect" in step **5**. The setting is returned to "Auto Detect".

Changing the paper type

By selecting the paper type you want to load, the printer performs better. You can select from the following paper types.

- Plain Paper, Recycled Paper, Special Paper, Color Paper, Letterhead, Preprinted Paper

Important

- ❒ The paper type setting in the printer driver takes priority over the setting on the control panel.

1 **Press the 【User Tools/Counter】 key.**

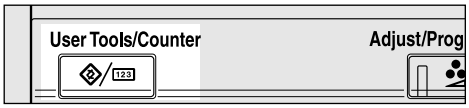

ZFLS110N

2 **Press [System Settings].**

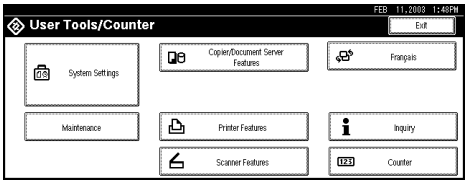

3 **Press [Tray Paper Settings].**

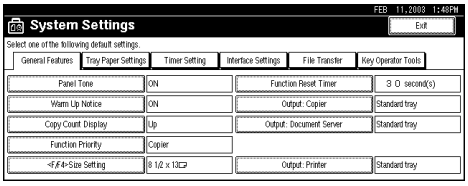

4 **Press [▼Next].**

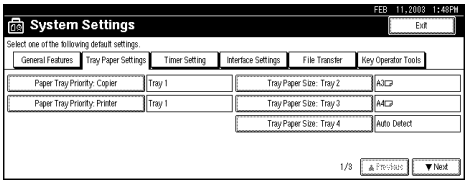

5 **Select the tray for which you want to change the paper settings.**

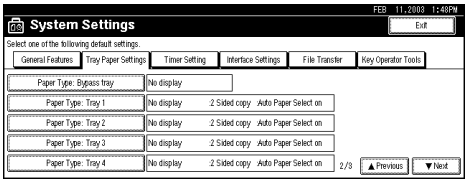

Note

❒ When the optional paper trays are installed, **[Tray Paper Size: Tray 3]** and **[Tray Paper Size: Tray 4]** are displayed.

6 **Select the paper type and the copying method in duplex.**

❶ **Select the paper type**

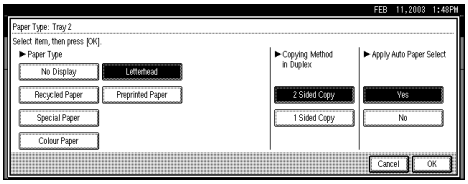

❷ **Specify the copying method in duplex.**

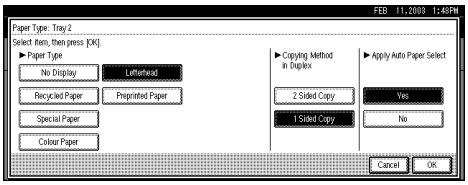

❸ **Specify whether you want to apply auto paper selection.**

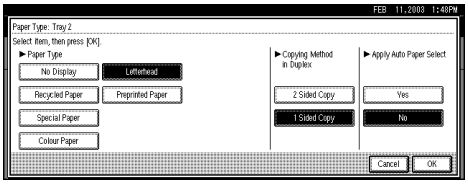

❹ **Press [OK].**

The specified paper setting is displayed.

7 **Press the 【User Tools/Counter】 key.**

The initial display appears.

Loading Paper in the Bypass Tray

Besides regular paper, you can use the bypass tray to load thick paper, envelopes, OHP transparencies, paper longer than A3▭, and paper that cannot be loaded in the paper trays or paper feed unit.

Note

❒ The bypass tray can accommodate sheets 90-305 mm wide and 148-457 mm long. However, the paper size must be set using the control panel. When using the RPCS printer driver, sheets of up to 1260 mm in length can be set.

❒ If you load custom size paper or special paper, select the paper size using the control panel. The RPCS printer driver can select the paper size using the printer driver properties. The paper size selected using the printer driver overrides that selected using the control panel. See p.69 “Specifying custom size paper for the Bypass Tray”.

❒ If you load thick paper, OHP transparencies, or envelopes, make the settings for thick paper or OHP transparencies using the control panel or printer driver. See p.70 “Specifying a paper type for the Bypass Tray”.

❒ The number of pages that can be loaded in the bypass tray differs depending on paper type. Check that the top of the stack is not higher than the limit mark inside the tray.

❒ When loading paper in the bypass tray, use ▯ orientation if possible.

Limitation

❒ You cannot use the following functions when printing on paper loaded in the bypass tray:
- Duplex Print
- Collate, Job Separation
- Staple/Punch
- Auto Tray Select

1 Open the bypass tray.

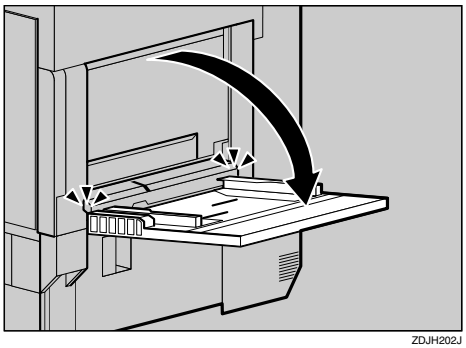

ZDJH202J

Note

❒ If you load 11 × 8 $^1/_2$ or larger size paper, pull out the bypass tray extension, and then flip it open.

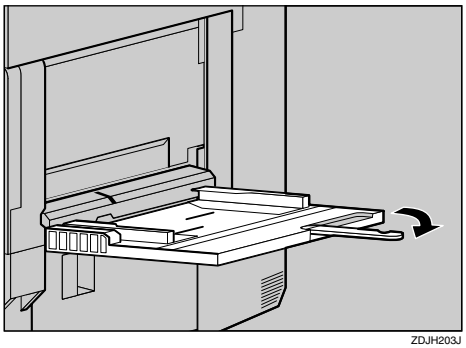

ZDJH203J

2 Slide the side guides outward (①), and then load paper print side up, until it stops (②).

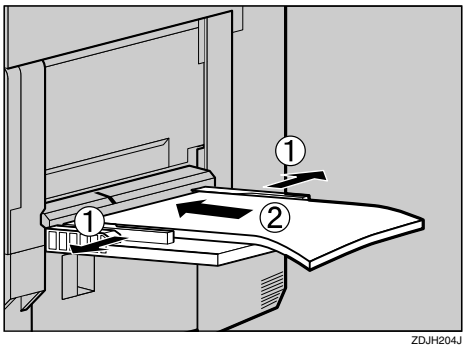

ZDJH204J

3 Adjust the side guides to fit the paper width.

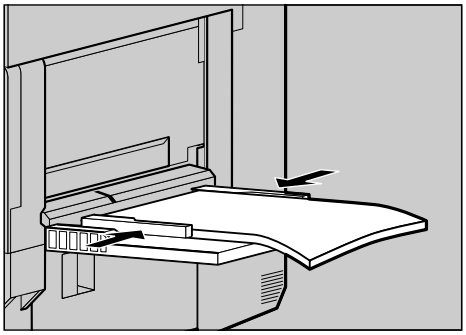

ZDJH205J

Important

❒ Check that the top of the stack is not higher than the limit mark inside the tray.

❒ Shuffle the paper before loading the stack onto the tray, so multiple sheets are not fed in together.

4 Set the paper size using the control panel as follows:

❶ **Press the 【User Tools/Counter】 key.**

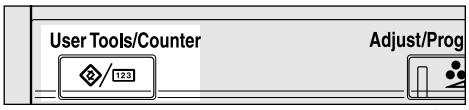

ZFLS110N

❷ **Press [Printer Features].**

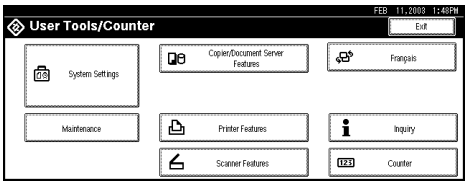

❸ **Press [Paper Input].**

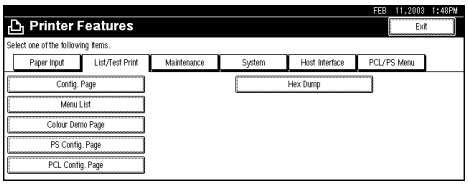

❹ **Press [Bypass Paper Size].**

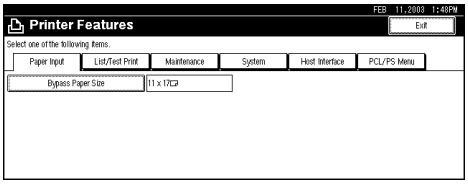

❺ **Select the loaded paper size and feed direction, and then press [OK].**

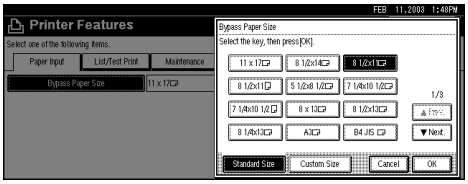

The set paper size and feed direction is displayed.

❻ **Press the 【User Tools/Counter】 key.**

The initial display appears.

Specifying custom size paper for the Bypass Tray

Important

- ❒ The paper size selected using the printer driver overrides that selected using the control panel. You do not have to make settings using the control panel if you already made them using the printer driver. However, when printing with a printer driver other than the RPC-S™ printer driver, you must make the settings using the control panel. For details about the printer driver, see Help.
- ❒ The printer cannot print from applications that do not support custom size paper.

1 **Press the 【User Tools/Counter】 key.**

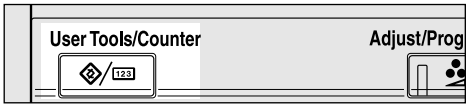

ZFLS110N

2 **Press [Printer Features].**

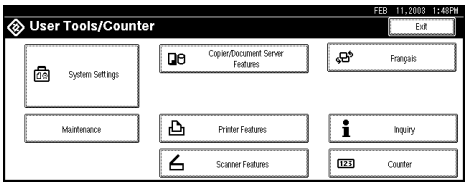

3 **Press [Paper Input].**

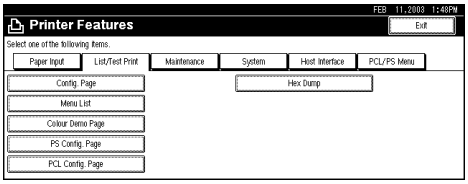

4

4 **Press [Bypass Paper Size].**

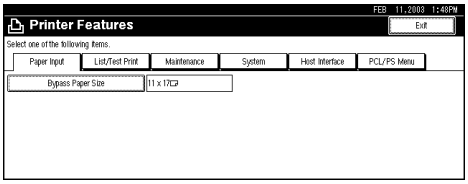

5 **Press [Custom Size].**

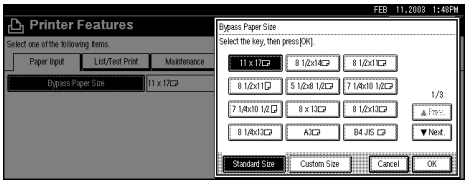

6 **Enter the paper size.**

❶ **Enter the vertical size of the paper in [Vert.] with the number keys, and then press [#].**

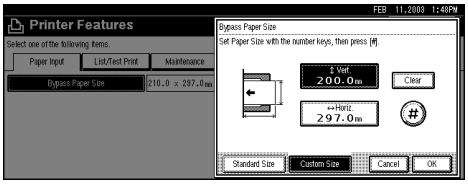

Note

❒ When **[Horiz.]** is highlighted, press **[Vert.]** to highlight **[Vert.]**, and then you can enter the value.

❒ If you want to clear the displayed value, press **[Clear]**.

❷ **Enter the horizontal size of the paper in [Horiz.] with the number keys, and then press [#].**

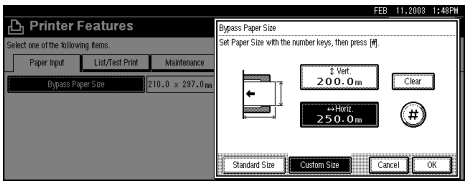

Note

❒ When **[Vert.]** is highlighted, press **[Horiz.]** to highlight **[Horiz.]**, and then you can enter the value.

❸ **Press [OK].**

The set paper size is displayed.

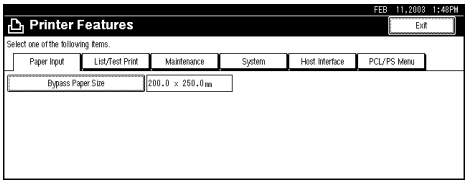

7 **Press the [User Tools/Counter] key.**

The initial display appears.

Specifying a paper type for the Bypass Tray

By selecting the paper type you want to load, the printer performs better. You can select from the following paper types:

- Plain Paper, Recycled Paper, Special Paper, Color Paper, Letterhead, Preprinted Paper, OHP Transparencies, Thick Paper, Plain Paper (Duplex), Thick Paper (Duplex)

Limitation

❒ You cannot use the following functions when printing on paper loaded in the bypass tray:

- Duplex Print
- Collate, Job Separation
- Staple, Punch
- Auto Tray Select

Important

❒ Be sure to select the paper type when you load labels, thick paper, or OHP transparencies in the Bypass Tray.

Note

❒ When printing labels, select thick paper as the paper type.

1 Press the 【User Tools/Counter】 key.

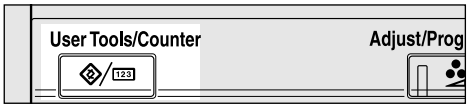

ZFLS110N

2 Press [System Settings].

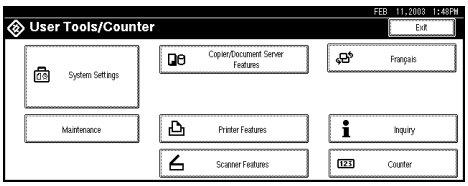

3 Press [Tray Paper Settings].

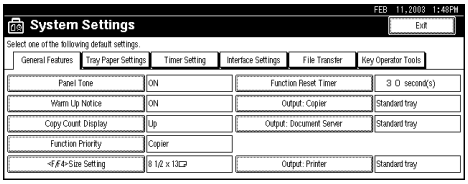

4 Press [▼Next].

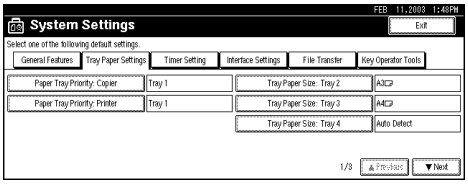

5 Press [Paper Type: Bypass tray].

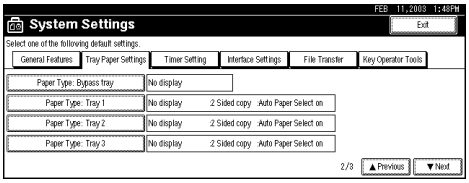

6 Select the paper type, and then press [OK].

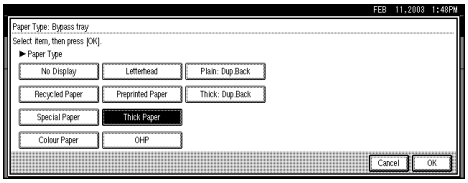

The specified paper setting is displayed.

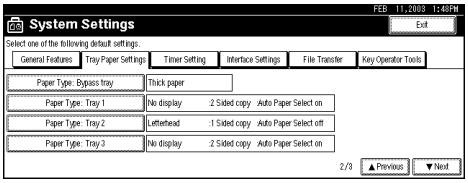

7 Press the 【User Tools/Counter】 key.

The initial display appears.

4

Error & Status Messages on the Control Panel

❖ Status Messages

Messages/Second messages	Causes	Solutions
Color is being adjusted	The printer is calibrating the color.	Wait for a while.
Hex Dump Mode	In Hex Dump Mode	No action required.
Initializing Unit	The printer is initializing the development unit.	Wait for a while. Do not turn the main power switch off while the machine is being initializing.
Loading Toner...	The printer is loading the toner.	Wait for a while.
Offline	The printer is offline and cannot print data.	Press 【OnLine】.
Please Wait	The printer is warming up or loading the toner.	Wait until the printer signals Ready.
Printing...	The printer is doing print job.	Wait for a while.
Ready	The default ready message. The printer is ready to use.	No action required.
Resetting Job...	Job is being reset.	Wait for a while.
Waiting...	The printer is waiting for the next data to print.	Wait for a while.

❖ Alert Messages

Messages/Second messages	Causes	Solutions
Add Toner No toner. Open the cover as shown and replace Toner Bottle by following instructions shown inside the cover.	The indicated toner cartridge(s) is/are empty.	Replace the indicated toner cartridge(s). See p.2 “Replacing the Toner Cartridge”.
Cannot communicate with external server. Contact key operator.	There is a problem with the Network settings.	Connect the machine to the Network correctly, and then make sure the server's power switch is on. If the message appears again, contact your key operator, sales or service representative.

Messages/Second messages	Causes	Solutions
Cannot connect with network. Check settings of IP Address.	There is a problem with the Network settings.	Set a IP address correctly. See "Configuring the Network with the Control Panel", *Setup Guide Copier System Edition*. If the message appears again, contact your sales or service representative.
Cannot connect with network. Contact key operator.	There is a problem with the Network settings.	Connect the machine to the Network correctly, and confirm other device's power switch is turned on. If the message appears again, contact your sales or service representative.
Cannot connect with the wireless card. Turn the main power switch off, then check the card.	These messages are displayed when IEEE 802.11b card is not inserted, or inserted incorrectly.	Turn the power off, and then on. Remove and reinstall the 802.11b interface unit correctly. If the message appears again, contact your sales or service representative.
Cannot print file stored in PC. Load paper on #.	The paper in tray # ran out while stored files were being printed. #: tray number	Load paper in tray #.
Close duplex unit cover.	The cover of the duplex reversal unit is open.	Close the cover of the duplex reversal unit.
Collate has been cancelled.	The setting of collate has been cancelled.	Turn the main power switch off and then on. If the message appears again, contact your sales or service representative. See "Turning Off the Main Power", *Setup Guide Copier System Edition*.
Development Unit Setting Error Development Units are not set properly: Black, Yellow, Magenta, Cyan Open the part as shown and set the unit.	The indicated development unit(s) is/are not set correctly, or is not set.	Set the indicated development unit(s) correctly. See p.16 “Replacing the Development Unit”.
Duplex has been cancelled.	The setting of duplex print has been cancelled.	To print the image correctly, add memory to the printer. Be sure to use the correct paper.

Messages/Second messages	Causes	Solutions
Duplex mode is in off position for tray #. Select another tray from followings and press [Continue]. To cancel job, press [Reset]. Tray setting can also be changed in User Tools. Required:<xxx> <yyy>	The machine sets duplex mode off for the tray # that the printer driver has set the mode on. #: tray number <xxx>: paper size <yyy>: paper type	Set the tray setting correctly.
Exceeded max. pages. Collate is incomplete.	The printer identified a collation page overflow error.	Increase the RAM capacity. Install the optional hard disk drive.
Exceeded max. stored pages in sample print and locked print.	The maximum number of stored files has been exceeded during Sample Print or Locked Print.	Reduce the number of pages to print.
Finisher is in use for another function. Please wait.	Optional 2 Tray Finisher is in use for another function.	Wait until the job will be completed.
Following output tray is full. Remove the paper.	The indicated output tray is full.	Remove paper from the output tray.
Function Problem Following unit is out of order. Press [Cancel] to cancel functions. Please call service.	There is a problem with the unit indicated in the panel display.	Turn the main power switch off and then on. If the message appears again, contact your sales or service representative. See "Turning Off the Main Power", *Setup Guide Copier System Edition*.
Function Problem Functional problem within the copier. Turn main power switch off then on. If the error appears again,	There is a problem with the machine in the location indicated on the panel display.	Turn the main power switch off, and then on five seconds later. If the message appears again, contact your sales or service representative. See "Turning Off the Main Power", *Setup Guide Copier System Edition*.
Fusing Oil Unit Replacement Fusing oil is empty. Open the part as shown and replace Fusing Oil Unit.	It is time to replace the fusing oil unit.	Replace a fusing oil unit. Depending on your service contract, contact your sales or service representative. See p.8 “Replacing the Fusing Oil Unit”.
Fusing Oil Unit Setting Error Fusing Oil Unit is not set properly. Open the part as shown and set the unit.	The fusing oil unit is not set correctly, or is not set.	Set the fusing oil unit correctly. See p.8 “Replacing the Fusing Oil Unit”.

Messages/Second messages	Causes	Solutions
Fusing Unit Replacement Replacement of Fusing Unit is required. Open the part as shown and replace the unit.	It is time to replace the fusing unit.	Replace a fusing unit. Depending on your service contract, contact your sales or service representative. See p.20 “Replacing the Fusing Unit”.
Fusing Unit Setting Error Fusing Unit is not set properly. Open the part as shown and set the unit.	The fusing unit is not set correctly, or is not set.	Set the fusing unit correctly. See p.20 “Replacing the Fusing Unit”.
Hard disk is full. Delete unnecessary files.	The maximum Hard disk drive area size has been exceeded.	Delete the unnecessary stored file.
Hole punch receptacle is full. Empty it.	The punch waste box is full of punch chips.	Remove the punch chips from the punch waste box. See p.100 “Removing Misfed Paper in the Duplex Feed Unit”. When the message appears even the waste box is not full, remove the Punch-hole chips on the top of the punch waste box. See p.107 “If the message appears even after removing the Punch-hole chips”.
LCT has a problem. Turn Main Power Switch off then on. If the error appears again, call service representative.	The LCT (Large Capacity Tray) is malfunctioning.	Turn the main power switch off and then on. If the message appears again, contact your sales or service representative. See "Turning Off the Main Power", *Setup Guide Copier System Edition*.
Load following paper in Tray #, , or select another tray and press [Continue]. To cancel job, press [Reset]. Required:<xxx> <yyy>	The indicated paper input tray is out of paper. #: tray number <xxx>: paper size <yyy>: paper type	Load paper into the indicated paper input tray.
NV-RAM has a problem.	The printer identified a memory switch (user account enhance unit) error.	Replace the user account enhance unit.

Messages/Second messages	Causes	Solutions
Original Misfeed Original was misfed at following point. Open the part as shown, then remove it.	There is a misfeed in the indicated point.	Remove the misfed paper. See p.90 “Removing Misfed Paper”.
Output tray has been changed.	The output tray has been changed because the selected output tray cannot handle the paper size in use.	Set the correct output tray.
Paper in duplex unit. Open cover and remove paper.	There is a misfeed in the duplex reversal unit.	Remove misfed paper. See p.97 “When "Paper Misfeed: Z1" Appears”.
Paper in staple tray. Open finisher cover and remove paper.	There is a misfeed in the optional 2 tray finisher.	Open the finisher cover and remove misfeed. See p.95 “When “Remove Misfeed R: Finisher” Appears”.
Paper Misfeed Paper was misfed at following point. Open the part as shown and remove it.	There is a misfeed in the indicated point.	Remove misfed paper. See p.90 “Removing Misfed Paper”.
Paper remains on staple tray. Remove it.	There is still paper in the staple tray.	Remove paper from the staple tray.
Paper size and type are mismatched. Select another tray from followings and press [Continue]. To cancel job, press [Reset]. Paper size and type can also be changed in User Tools. Required:<xxx> <yyy>	The paper size and the paper type settings of the input paper tray are not the same as those of the tray selected by the printer driver, when Auto Tray Select feature is on. <xxx>: paper size <yyy>: paper type	Load the required paper size and type into the paper input tray.
Paper size and type of tray # are mismatched. Select another tray from followings and press [Continue]. To cancel job, press [Reset]. Paper size and type can also be changed in User Tools. Required:<xxx> <yyy>	The paper size and the paper type settings of the input paper tray are not the same as those of the printer driver. #: tray number <xxx>: paper size <yyy>: paper type	Load the required paper size and type into the paper input tray #.

Messages/Second messages	Causes	Solutions
Paper size of Tray # is mismatched. Select another tray from followings and press [Continue]. To cancel job, press [Reset]. Paper size can also be changed in User Tools. Required:<xxx> <yyy>	The paper size settings of the input paper tray is not the same as those of the printer driver. #: tray number <xxx>: paper size <yyy>: paper type	Load the required paper size into the paper input tray #.
Paper type of Tray # is mismatched. Select another tray from followings and press [Continue]. To cancel job, press [Reset]. Paper type can also be changed in User Tools. Required:<xxx> <yyy>	The paper type settings of the input paper tray is not the same as those of the printer driver. #: tray number <xxx>: paper size <yyy>: paper type	Load the required paper type into the paper input tray #.
Parallel I/F board has a problem.	There is a problem with the parallel interface.	If you use the parallel I/F, replace the interface cable that caused the error. If the message appears again, contact your sales or service representative.
Photoconductor Units Setting Error Photoconductor Units are not set properly: Black, Yellow, Magenta, Cyan Open the part as shown and set the unit.	The indicated photoconductor unit(s) is/are not set correctly, or is not set.	Set the indicated photoconductor unit(s) correctly. See p.12 “Replacing the Photoconductor Unit”.
Problem with the hard disk. Call service.	The printer identified a hard disk drive error.	Turn the main power switch off and then on. If the message appears again, contact your sales or service representative. See "Turning Off the Main Power", *Setup Guide Copier System Edition*.
Problem with IEEE 1394 board. Call service.	The printer identified an IEEE1394 Board error.	Contact your sales or service representative.
Problem with the printer module. Call service.	The printer identified a DIMM sum value error.	Contact your sales or service representative.

Messages/Second messages	Causes	Solutions
Problems with the wireless board. Please call service.	These messages are displayed when IEEE 802.11b board does not work correctly for some reasons.	Turn the power off, and then on. Remove and reinstall the 802.11b interface unit correctly. If the message appears again, contact your sales or service representative.
Punch has been cancelled.	The setting of punch function has been cancelled.	Verify that the paper orientation, paper feed direction and the setting of punch where you desire.
Replacement of Development Unit is required. Replace Development Unit(s).	It is time to replace the color or the black development unit(s).	Replace the color or the black development unit(s). See p.16 “Replacing the Development Unit”.
Replacement of Photoconductor Unit is required. Replace Photoconductor Unit.	It is time to replace the color or the black photoconductor unit.	Replace the color or the black photoconductor unit. Depending on your service contract, contact your sales or service representative. See p.12 “Replacing the Photoconductor Unit”.
Replace Waste Oil Bottle Waste Oil Bottle is full. Please call service.	To print clearly, fusing oil is used. When fusing oil is used, waste oil flows to the waste oil bottle. These messages are displayed when the bottle becomes full of waste oil.	Contact your sales or service representative.
Reset duplex unit correctly.	The duplex paper feed unit is not set correctly or is not set.	Remove and re-install the duplex paper feed unit correctly. See "Setting Up", *Setup Guide Copier System Edition.*.
Reset tray # correctly, or select another tray and press [Continue]. To cancel job, press [Reset]. Required:<xxx> <yyy>	The indicated paper input tray is not set correctly, or is not set. #: tray number <xxx>: paper size <yyy>: paper type	Set the indicated paper input tray correctly.
RPCS graphic error.	The graphic is not initialized because the graphic memory was not reserved.	Replace the installed memory.

Messages/Second messages	Causes	Solutions
RPCS memory overflow.	The printer memory is not initialized because the CDC memory was not reserved via the system call.	Replace the installed memory.
RPCS syntax error.	The printer identified a syntax error. This error results from; data modification caused by the transmission path problem, data interruption, data transmission from other drivers, etc.	Be sure to use the correct driver.
SDRAM module could not be recognized. Call service.	The printer identified an optional SDRAM error.	Remove and re-install the optional SDRAM. If the message appears again, contact your sales or service representative.
Selected paper tray is in use for another function. Please wait.	The input paper tray selected by the printer driver is being used for another function.	Wait until the job will be completed.
Shift tray has a problem. Call service representative.	Malfunction occurs when using the Shift function	Contact your sales or service representative.
Staple has been cancelled.	The staple feature has been cancelled.	Verify that the paper orientation and layout is properly set, and make sure whether your desired settings or finisher is selected.
Staple is almost empty.	Staple is almost empty in the stapler.	Replace staples.
Staple unit has a problem. Call service representative.	There is a problem with the staple unit.	Contact your sales or service representative.
Staple unit is in use for another function. Please wait.	Staple unit is in use for another function.	Wait until the staple job will be completed.
Toner Cartridge Setting Error TonerCartridge(s) maynot be set properly: ××× Open the part as shown and check the cartridge(s).	The indicated toner cartridge(s) is/are not set correctly, or is not set. ×××: Yellow/Magenta/Cyan/Black	Set the indicated toner cartridge(s) correctly. See p.2 “Replacing the Toner Cartridge”.
Toner is almost empty. Replace Toner Bottle.	The printer is almost out of indicated toner.	Replace the indicated toner cartridge(s).
Transfer Unit Setting Error Transfer Unit is not set properly. Open the part as shown and set the unit.	The transfer unit is not set correctly, or is not set.	Set the Transfer Unit correctly. See "Setting Up", *Setup Guide Copier System Edition*..

Messages/Second messages	Causes	Solutions
Tray # has a problem. Select another tray and press **[Continue]**. To cancel job, press **[Reset]**. Required:<xxx> <yyy>	There is a problem with the input paper tray #. #: tray number <xxx>: paper size <yyy>: paper type	Turn the main power switch off and then on. If the message appears again, contact your sales or service representative. See "Turning Off the Main Power", *Setup Guide Copier System Edition*.
USB has a problem. Please call service.	This message is displayed when some problem with USB occurs. After the machine reboots, the message will go off. If the message is not cleared after rebooting, the controller board has to be replaced.	Turn the power off, and then on. Remove and re-install the USB 2.0 interface board correctly. If the message appears again, contact your sales or service representative.
Used toner bottle is full.	The used toner bottle is full of toner dust.	Replace a used toner bottle. See p.25 “Replacing the Used Toner Bottle”.
Used Toner Bottle Replacement Used Toner Bottle is full. Open the part as shown and replace the bottle. Used Toner Bottle is located behind Waste Oil Bottle. Pull out Waste Oil Bottle to access Used Toner Bottle.	These messages are displayed when the used toner bottle becomes full of used toner.	Replace the used toner bottle. Depending on your service contract, contact your sales or service representative. See p.25 “Replacing the Used Toner Bottle”.
Used Toner Bottle Setting Error Used Toner Bottle is not set properly. Open the part as shown and set the bottle. Used Toner Bottle is located behind Waste Oil Bottle. Pull out Waste Oil Bottle to access Used Toner Bottle.	The used toner bottle is not set correctly, or is not set.	Set the used toner bottle correctly. See p.25 “Replacing the Used Toner Bottle”.
Waste Oil Bottle is almost full. Please call service.	To print clearly, Fusing Oil is used. When Fusing Oil is used, waste oil flows to the waste oil bottle. These message are displayed when the waste oil bottle is almost full of waste oil.	Contact your sales or service representative.

Messages/Second messages	Causes	Solutions
Waste Oil Bottle is full. Please call service.	To print clearly, fusing oil is used. When fusing oil is used, waste oil flows to the waste oil bottle. These message are displayed when the bottle becomes full of waste oil.	Contact your sales or service representative.
Waste Oil Bottle Setting Error Waste Oil Bottle is not set correctly. Open the cover as shown and set the bottle correctly.	To print clearly, Fusing Oil is used. When fusing oil is used, waste oil flows to the waste oil bottle. These messages are displayed when the waste oil bottle is not set correctly.	Contact your sales or service representative.

Printer Does Not Print

Possible cause	Solutions
Is the power on?	Check the cable is securely plugged into the power outlet and the printer. Turn on the power.
Does the **Online** indicator stay on?	Press 【On Line】 so the indicator lights.
Does the **Error** indicator stay red?	Check the error message on the display and take the required action.
Is paper loaded?	Load paper into the paper tray or onto the bypass tray. See p.51 "Paper and Other Supported Media".
Can you print a configuration page?	If you cannot print a configuration page, a printer malfunction is likely. You should contact your sales or service representative. See "Printing a Configuration Page", *Administrator Reference Copier System Edition*.
Is the interface cable connecting the printer to the computer connected securely?	Connect the interface cable properly. If there are any connectors or screws, check they are fastened securely.
Are you using the correct interface cable?	The type of interface cable you should use depends on the computer. Be sure to use the correct one. If the cable is damaged or worn, replace it. See "Appendix", *Administrator Reference Copier System Edition*.

Possible cause	Solutions
Is the **Data In** indicator blinking or lit after starting the print job?	If it is not blinking or lit, data is not being received. ❖ **If the printer is connected to the computer using the interface cable** Make sure the following printer port settings are correct: • For parallel port connection, port LPT1 or LPT2 should be set. • For IEEE 1394 (SCSI print) port connection, port 1394_00(n) *1 should be set. *1 (n) is the number of printers connected. • **Windows 95/98/Me** ① Click **[Start]**, point to **[Settings]**, and then click **[Printers]**. ② Click to select the printer icon. Next, on the **[File]** menu, click **[Properties]**. ③ Click the **[Details]** tab. ④ Check the **[Print to the following port]** box to confirm that the correct port is selected. • **Windows 2000** ① Click **[Start]**, point to **[Settings]**, and then click **[Printers]**. ② Click to select the icon of the printer. Next, on the **[File]** menu, click **[Properties]**. ③ Click the **[Port]** tab. ④ Check the **[Print to the following port]** box to confirm the correct port is selected. • **Windows XP** ① Access the **[Printers and Faxes]** window from **[Start]** on the taskbar. ② Click to select the icon of the printer. Next, on the **[File]** menu, click **[Properties]**. ③ Click the **[Port]** tab. ④ Check the **[Print to the following port(s).]** box to confirm that the correct port is selected. • **Windows NT 4.0** ① Click **[Start]**, point to **[Settings]**, and then click **[Printers]**. ② Click to select the icon of the printer. Next, on the **[File]** menu, click **[Properties]**. ③ Click the **[Port]** tab. ④ Check the **[Print to the following port]** box to confirm the correct port is selected. ❖ **Network Connection** Contact your network administrator.

Possible cause	Solutions
When you use 1394 Interface Unit Type4510	① Check the 1394 Interface Unit Type4510 is attached to the computer correctly. ② Check the IEEE 1394 interface cable is connected securely. ③ Restart the computer. If the error occurs even after executing the above, proceed to the following steps. ④ Unplug the IEEE 1394 interface cable connected to the printer. ⑤ Execute the utility tool for 1394 Interface Unit Type4510 is stored in the following path on the CD-ROM labeled "Printer Drivers and Utilities". **UTILITY\1394** **Important** ❒ For details about using the utility tool for IEEE 1394, see the README file in the same directory on the CD-ROM.

Other Printing Problems

Problem	Possible causes and solutions
Black areas and lines are printed with an unnatural hue.	• PCL 5c/PostScript 3 Select **[CMY+K]** for Gray Reproduction in the printer driver's **[Advanced]** dialog box under the **[Print Quality]** tab. • RPCS Select **[CMY+K]** for Gray Reproduction under the **[Image Adjustments]** tab in the printer driver's **[Change Use Setting]** dialog box.
Color documents are printed in black and white.	The printer driver is not set up for color printing. • PCL 5c/PostScript 3 Select **[Color]** for the Color/Black and White under the printer driver's **[Setup]** tab. • RPCS Select **[Color]** for the Color/Black and White under the printer driver's **[Print Settings]** tab. For details, see the printer driver Help.
	Some applications normally print color text as black and white.
Fine dot pattern does not print.	• PCL 5c/PostScript 3 Change the **[Dithering]** setting in the **[Advanced]** dialog box under the printer driver's **[Print Quality]** tab. • RPCS Change the **[Dithering]** setting under the **[Image Adjustments]** tab in the **[Change User Settings]** dialog box under the **[Print Quality]** tab in the printer properties dialog box. For details, see the printer driver Help.
Images are cut off, or excess pages are printed.	You might be printing on paper that is smaller than the size selected in the application. Use paper the same size as that selected in the application. If you cannot load paper of the correct size, use the reduction function to reduce the image, and then print. See the printer driver Help.

Problem	Possible causes and solutions
It takes too much time to complete the print job.	Photographs and other data-rich pages take a long time for the printer to process, so simply wait when printing such data. Changing the following settings may help speed up printing. • PCL 5c Select **[600 dpi]** as the Resolution under the **[Print Quality]** tab in the printer properties dialog box. • PostScript 3 Select **[1200 dpi]** or **[600 dpi]** as the Resolution under the **[Print Quality]** tab in the printer properties dialog box. Select **[Fast]** as the Gradation under the **[Print Quality]** tab in the printer properties dialog box. Select **[Post Script(optimize for speed)]** as the PostScript 3 output format under the **[PostScript]** tab in the printer properties dialog box. • RPCS Select **[1200×600 dpi]** or **[600×600 dpi]** as the Resolution under the **[Image Adjustments]** tab in the **[Change User Settings]** dialog box in the printer dialog box. Select **[Speed]** Print priority under the **[Print Quality]** tab in the printer properties dialog box. For details, see the printer driver Help.
	The data is so large or complex that it takes time to process. If the **Data In** indicator is blinking, data processing is in progress. Just wait until it resumes.
	If the "Warming Up... " message appears on the display, the printer is warming up. Wait a while
	Note ❒ To maintain optimum quality, color adjustment is regularly executed during or after printing. Even if printing is not specified, color adjustment is sometimes executed automatically while the power is on.
It takes too much time to resume printing.	The data is so large or complex that it takes time to process. If the **Data In** indicator is blinking, data processing is in progress. Just wait until it resumes.
	The printer might be in Energy Saver mode. In this mode, the printer has to warm up before printing can start, and this takes time. To change how long it takes before the printer goes into Energy Saver mode or to disable Energy Saver mode, configure Energy Saver1 or Energy Saver2 in the System Settings menu.
Multiple pages are fed through the printer at once.	Paper misfeeds occur frequently when the paper feed roller is dirty. Contact your sales or service representative to replace the paper feed roller.

Problem	Possible causes and solutions
Output are not delivered to the selected tray you require.	When using the bypass tray, the size selected on the display might be different from actual paper size. Select the correct paper size. See p.51 “Paper and Other Supported Media”.
	If you are using a Windows operating system, printer driver settings override those set using the control panel. Set the desired output tray using the printer driver. See the printer driver Help.
Paper misfeeds occur frequently.	Check the side guide of the paper tray is locked. See p.51 “Paper and Other Supported Media”. Paper size and feed direction of paper in the Bypass Tray might not be the same as those selected using the control panel. Check the settings on the control panel, and load paper of the correct size and feed direction. See p.51 “Paper and Other Supported Media”.
	Check the paper guide of the paper tray is attached properly.
Solid areas, lines, or text are shiny or glossy when printed as a mixture of cyan, magenta, yellow.	• PCL 5c/PostScript 3 Select **[K(Black)]** for Gray Reproduction in the printer driver's **[Advanced]** dialog box under the **[Print Quality]** tab. • RPCS Select **[K(Black)]** for Gray Reproduction under the **[Image Adjustments]** tab in the printer driver's **[Change Use Setting]** dialog box.
Solid lines are printed as broken lines.	• PCL 5c/PostScript 3 Change the **[Dithering]** setting in the **[Advanced]** dialog box under the printer driver's **[Print Quality]** tab. • RPCS Change the **[Dithering]** setting under the **[Image Adjustments]** tab in the **[Change User Settings]** dialog box, under the **[Print Quality]** tab in the printer properties dialog box. For details, see the printer driver Help.
Some parts of the print image are not clear.	Make the image density darker. To adjust image density, press **【Menu】** on the control panel, and then select Image Density from the Maintenance menu.
The color of the printout is different from the color on the computer display.	Toner based color settings under the printer driver produce unexpected printout colors.
	Changing color settings using the printer driver produces unexpected printout colors. See the printer driver Help.
The image is printed in the wrong orientation.	The feed direction you selected and the feed direction selected in Option Setup of the RPCS printer driver may be conflicting. Make the proper settings.

Problem	Possible causes and solutions
Color registration shifts when printing in color on thick paper.	Press 【Menu】, and then select Color Regist. from the Maintenance menu. See p.31 "Cleaning and Adjusting the Printer".
The control panel error message stays on after removing the misfed paper.	Open the front cover of the printer, and then close it.
The print image is not clear.	Due to sudden temperature change, condensation might appear inside the printer, reducing print quality. If you move the printer from a cold room to a warmer room, do not use until it acclimatizes to the temperature.
The print side of pages is hazy gray.	Adjust image density. To adjust image density, press 【Menu】, and select Image Density from the Maintenance menu. See p.31 "Cleaning and Adjusting the Printer".
	If paper is curled, correct it. Curled or folded paper might result in hazy gray print. Curling often occurs with postcards, so be sure to correct it before printing.
Printed images are different to computer screen images.	When you use certain functions, such as enlargement and reduction, image layout might be different from that displayed on the computer screen.
	You might have selected to replace True Type fonts with printer fonts in the printing process. To print an image like that image on the computer screen, make settings to print out True Type fonts as an image. See the printer driver Help.
The printer does not print at 1200 dpi, even if 1200 dpi resolution is selected.	Printing at 1200 dpi is memory intensive. Therefore, depending on memory capacity, you may not be able to print at 1200 dpi. Either add memory to the printer, or reduce the size of data. See "Memory Capacity and Paper Size", *Administrator Reference Copier System Edition*.
There are color differences in color documents.	Press 【Menu】, and then select Color Regist. from the Maintenance menu. See p.31 "Cleaning and Adjusting the Printer".

Note

❒ If the problem cannot be solved, contact your sales or service representative.

Removing Misfed Paper

If a paper misfeed occurs, an error message appears indicating the location of the misfed paper on the display.

❖ Misfeed Recovery

This printer has a misfeed recovery function that sends misfed paper to the standard tray or right cover. Usually, you can remove the misfed paper from one or other of these trays. Usually, you can remove the misfed paper easily with this function.

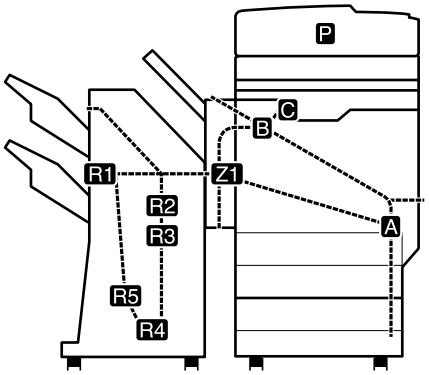

ZFQC050J

Important

- ❒ When clearing misfeeds, do not turn off the operation switch. If you do, your machine settings are cleared.
- ❒ To prevent misfeeds, do not leave any torn scraps of paper within the machine.
- ❒ If paper misfeeds occur repeatedly, contact your service representative.

Note

- ❒ More than one misfed area may be indicated. In this case, check every applicable area.
- ❒ You can find a sticker explaining how to remove misfed paper inside the front cover or inside the finisher.

Detaching the 2 Tray Finisher

There are times when you may need to detach the 2 tray finisher from the printer to remove misfed paper. This section describes how to detach the 2 tray finisher.

1 Hold the handle at the top of the 2 tray finisher firmly using one hand, pull the 2 tray finisher straight out, and let go when it stops.

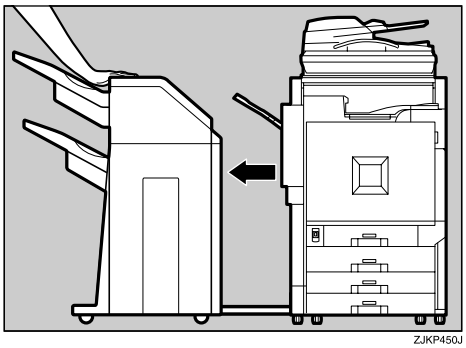

ZJKP450J

The 2 tray finisher is detached from the printer.

2 Use both hands to push it straight back in, and let go when it clicks into place.

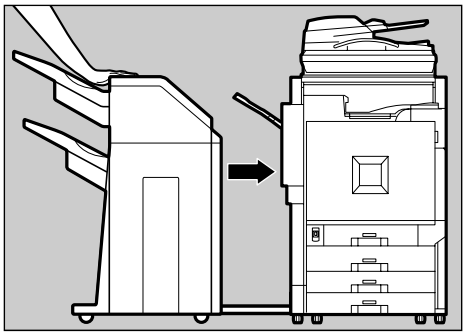

ZJKP350J

The 2 tray finisher is reattached to the printer.

Important

- ❒ Attach the 2 tray finisher to the printer after closing the duplex reversal unit.

Detaching the PT460 (Multi-bin)

When replacing various units or removing misfed paper, the duplex reversal unit is opened. If the optional PT460 (Multi-bin) is attached to the duplex reversal unit, detach it before opening the duplex reversal unit. After closing the duplex reversal unit, reattach the optional PT460 (Multi-bin).

1 Raise the external tray attached to the duplex reversal unit.

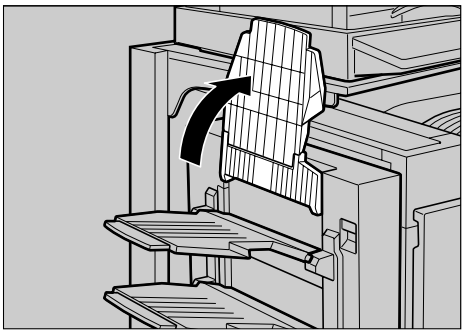

ZJMH010N

2 Pull the upper tray of the PT460 (Multi-bin) out and up creating a slant.

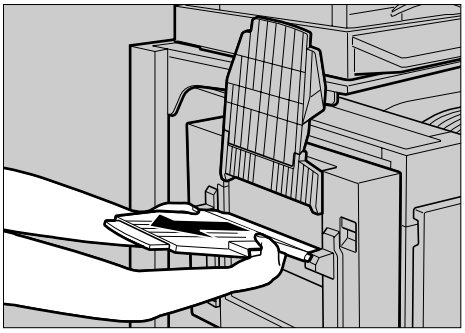

ZJMH030N

3 Pull the lower tray of the PT460 (Multi-bin) out and up to detach it as in step 2.

This completes the detachment of the PT460 (Multi-bin).

4 Raise the external tray attached to the duplex reversal unit.

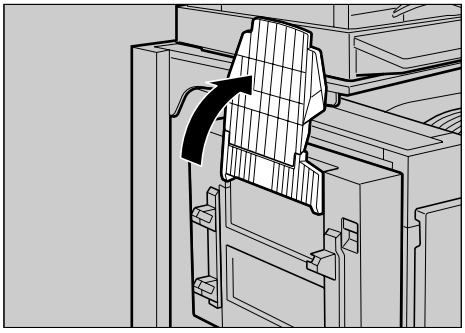

ZJMH020N

5 Insert the hooks on both sides of the lower tray of the PT460 (Multi-bin) into the slots.

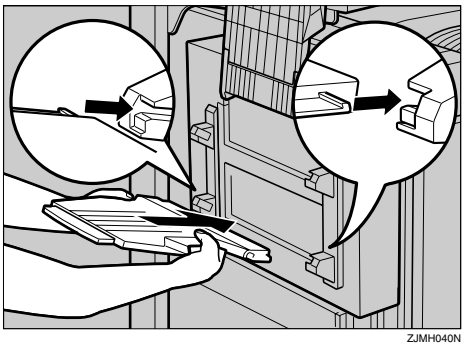

ZJMH040N

6 Insert the hooks on both sides of the upper tray of the PT460 (Multi-bin) into the slots as in step 5.

This completes the reattachment of the PT460 (Multi-bin) to the duplex unit.

Opening and Closing the Duplex Reversal Unit

There are times when you may need to detach the duplex reversal unit to remove misfed paper. This section describes how to detach the duplex reversal unit.

1 Push up the lock release button and leave it in place.

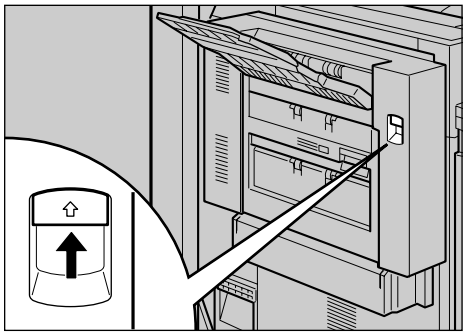

ZJKY010J

2 Slowly lower the duplex reversal unit, until it stops.

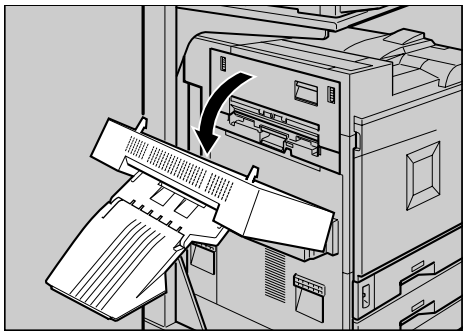

ZJKY020J

Important

- ❒ Open the duplex reversal unit after detaching the 2 tray finisher from the printer.

Note

- ❒ You do not have to remove the output tray, even if the 2 tray finisher is attached.

The duplex reversal unit is opened.

3 Slowly close the duplex reversal unit by raising it using both hands, and push it in until it clicks into place.

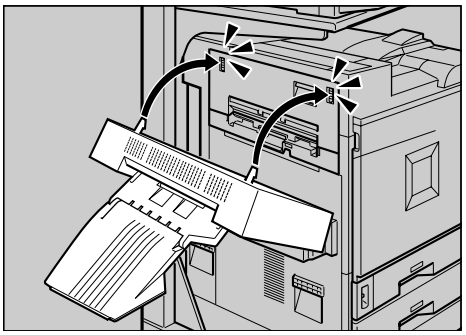

ZJKY030J

The duplex reversal unit is closed.

Important

- ❒ Attach the duplex reversal unit after closing the upper left cover for the printer.

When "Remove Misfeed A: Internal Path" Appears

1 **Open the bottom-right cover by pulling its lever.**

ZJKY350J

2 **Move the blue lever up and down to feed the misfed paper, and then slowly pull out the paper.**

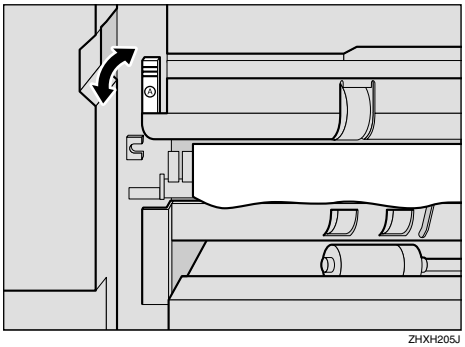

ZHXH205J

3 **Close the right cover by pushing the area labeled "PUSH".**

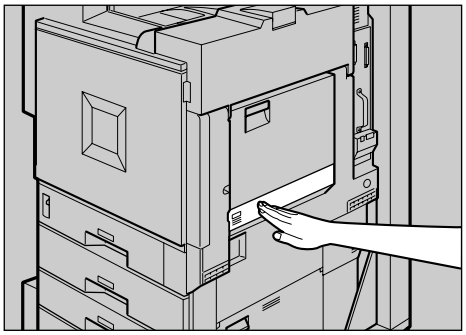

ZJKY360J

When "Remove Misfeed B: Fusing Unit" Appears

⚠ ***CAUTION:***

- *The inside of the machine becomes very hot. Do not touch parts labelled "hot surface". Touching a "hot surface" could result in a burn.*

1 **If the 2 tray finisher is installed, detach it from the printer.**

Reference

p.90 "Detaching the 2 Tray Finisher"

2 **If the duplex unit is installed, open the duplex reversal unit.**

Reference

p.92 "Opening and Closing the Duplex Reversal Unit"

3 **If the output tray is attached to the printer, raise it in the direction of the arrow (①), and then remove it (②).**

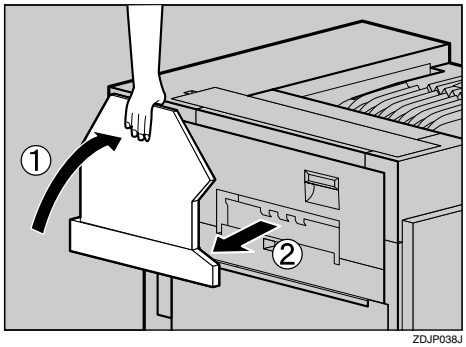

ZDJP038J

5

4 **Slowly pull out the upper left cover for the printer.**

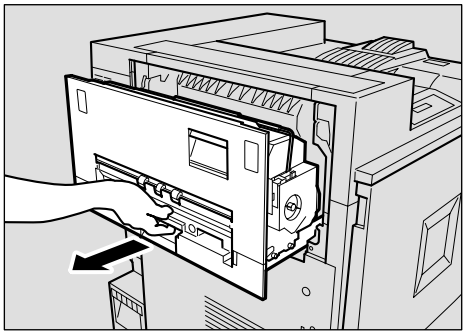

ZHXH010J

5 **Open the upper left cover.**

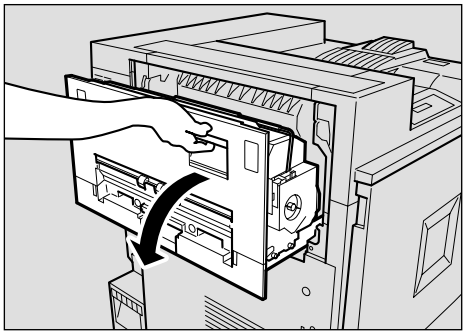

ZHXH020J

6 **Turn the blue dial in the direction of the arrow to push out the misfed paper, and slowly pull out the paper.**

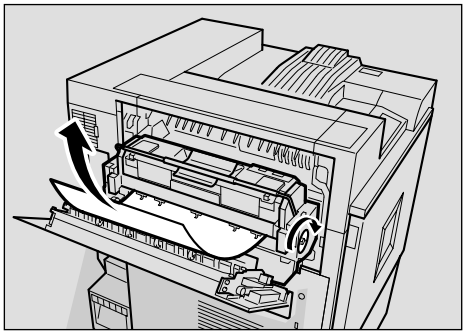

ZHXH670J

Important

- ❒ Always turn the blue dial in the direction of the arrow. If you turn it in the reverse direction, paper feeds into the printer, making it difficult for you to take out.
- ❒ Do not pull out misfed paper. Use the blue dial to push it.

7 **Close the upper left cover (①) and push the part labeled "PUSH" next to the handle at the bottom rear, the back until it clicks (②).**

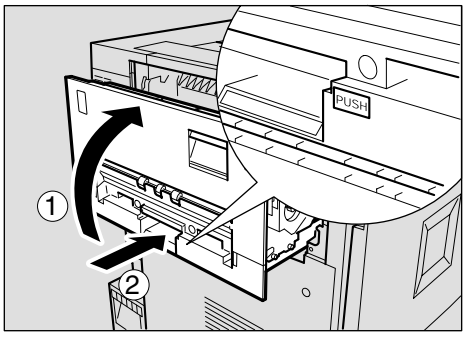

ZHXH082J

8 **If you removed the output tray in step 3, reattach it to. Insert the hooks of the output tray into the printer slits, and then lower it toward you.**

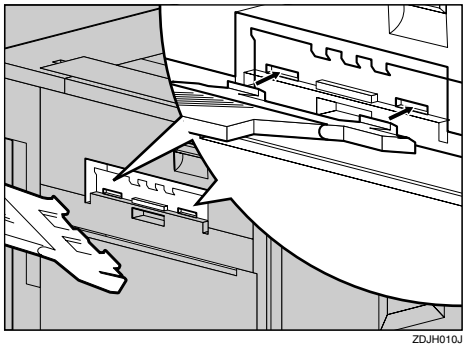

ZDJH010J

9 **If the duplex unit is installed, close the duplex reversal unit.**

Reference

p.92 "Opening and Closing the Duplex Reversal Unit"

10 **If the 2 tray finisher is installed, reattach it to the printer.**

Reference

p.90 "Detaching the 2 Tray Finisher"

When "Remove Misfeed R: Finisher" Appears

Open the top cover (①) and front cover (②) of the 2 tray finisher, and then remove the misfed paper.

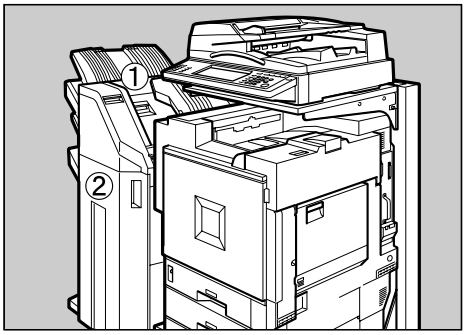

ZJKY200J

1 **Raise it vertically.**

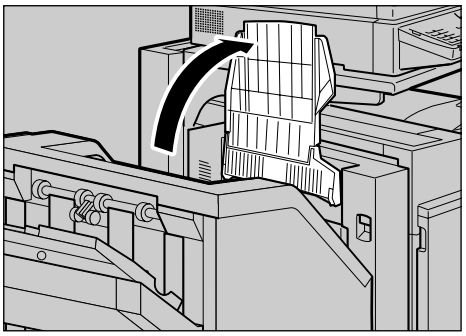

ZJKY190J

2 **Open the top cover for the 2 tray finisher, and then slowly pull out the misfed paper.**

ZJKY210J

3 **Close the top cover slowly.**

4 **Open the front cover for the 2 tray finisher.**

Check to see if there is misfed paper in areas A, B, C, and D.

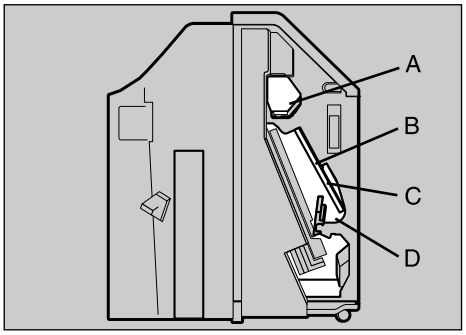

ZDJP209J

5 **Check area A of step 4. Lift the lever (①), and then while holding it up with your hand, slowly pull out the misfed paper.**

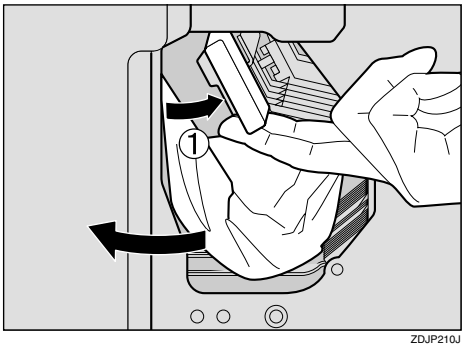

ZDJP210J

6 **Slowly lower the lever to put it back into place.**

7 **Check areas B and C of step 4. Lower the lever in the direction of the arrows (①), and then slowly pull out the misfed paper.**

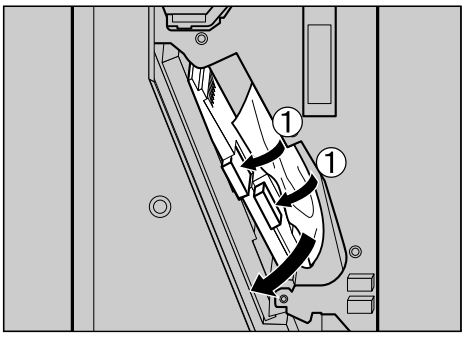

ZDJP211J

8 **Slowly lift the lever to put it back into place.**

9 **Check area D of step 4. Lift the lever in the direction of the arrow (①), and then slowly pull out the misfed paper.**

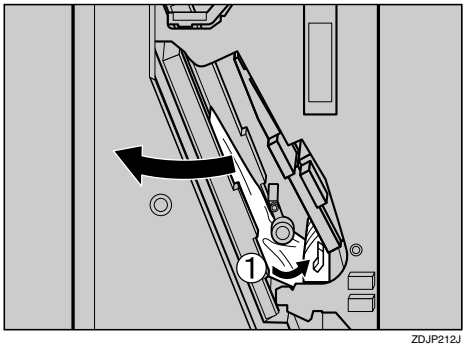

ZDJP212J

10 **Slowly lower the lever to put it back into place.**

11 **Close the front cover of the 2 tray finisher.**

If the error message does not disappear even after misfed paper is removed, detach the 2 tray finisher from the printer to check for misfed paper there.

Reference

p.90 "Detaching the 2 Tray Finisher" for details about how to detach/reattach the 2 tray finisher from/to the printer

12 **Put the output tray back into place.**

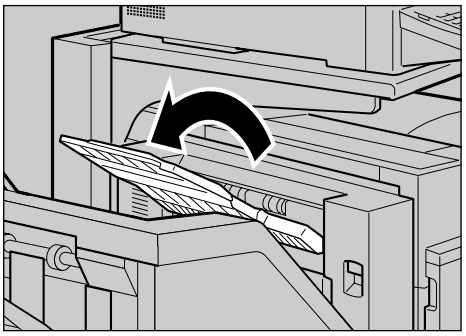

ZJKP360J

When "Remove Misfeed Y: Paper Tray" Appears

1 **Open the lower right cover of the paper feed unit, and then pull out the misfed paper.**

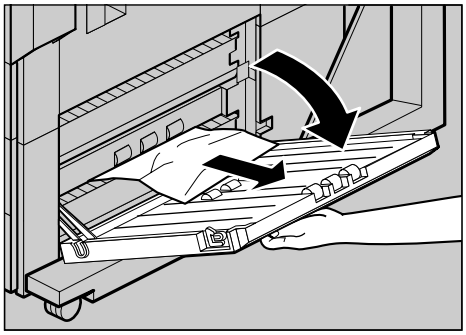

ZJKY370J

2 **Close the lower right cover of the paper feed unit.**

When "Paper Misfeed: Z1" Appears

⚠ ***CAUTION:***

- *The inside of the machine becomes very hot. Do not touch parts labelled "hot surface". Touching a "hot surface" could result in a burn.*

1 **If the 2 tray finisher is installed, detach it from the printer.**

Reference

p.90 "Detaching the 2 Tray Finisher"

2 **Open the left cover of the duplex reversal unit, and then remove the misfed paper. Do not pull the paper out forcefully.**

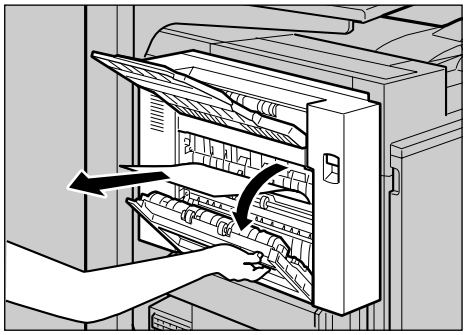

ZJKY220J

If you cannot remove the paper, proceed to step **3**.

3 **Push up the lock release button of the duplex reversal unit, and then hold it in place.**

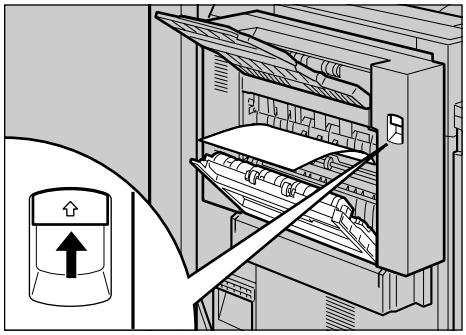

ZJKY230J

4 **Slowly lower the duplex reversal unit until it stops, and remove the misfed paper.**

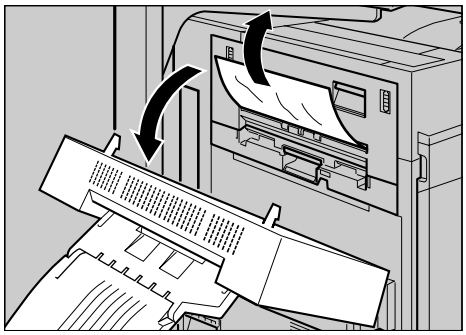

ZJKY170J

5 **Slowly raise the duplex reversal unit and insert until it clicks into place. Raise the left cover, and then close it securely by pushing the area labeled "PUSH".**

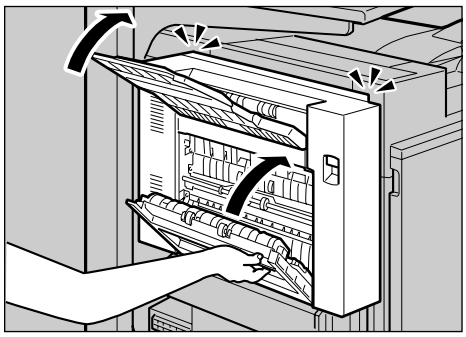

ZJKY240J

When "Original Misfeed: P" Appears

1 **Pull up the lever (①) and then open the upper cover (②).**

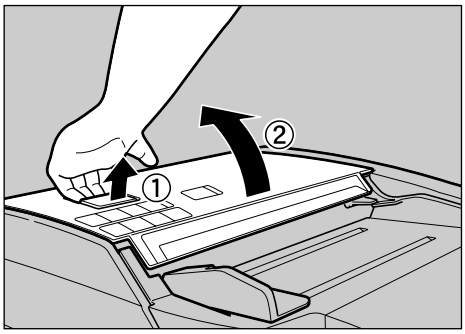

ZFQY010J

2 **Lift the part in the illustration while squeezing its blue part.**

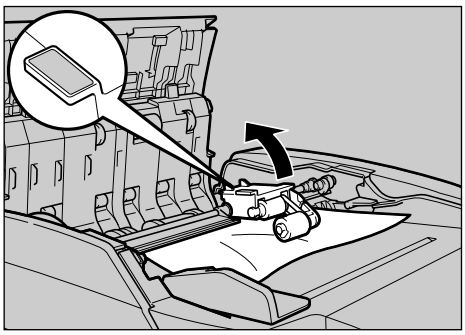

ZFQY020J

3 **Hold the part in the illustration and slowly remove the misfed paper.**

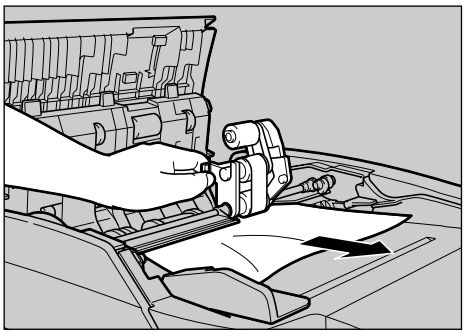

ZFQY030J

4 **Lower the part in the illustration back into place.**

If you cannot remove the misfed paper, go to step **5**.

5 **Turn the dial in the direction of the arrow, feed the misfed paper, and then slowly remove the paper.**

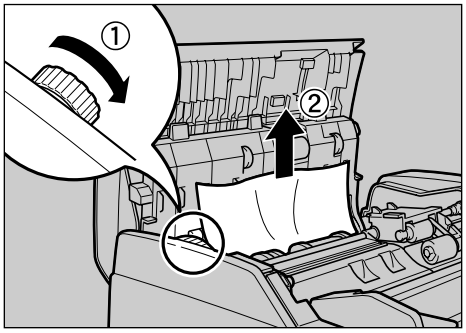

ZFQY040J

If you cannot remove the paper, go to step **6**.

6 **Hold the blue parts of the panel, and then move the panel in the direction of the arrow in the illustration.**

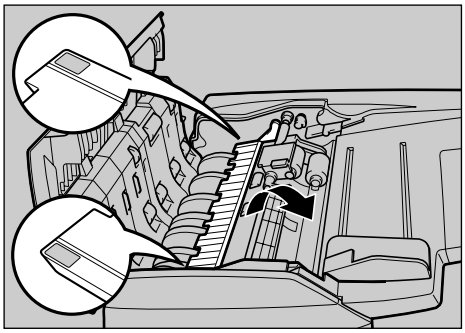

ZFQY050J

7 **Slowly remove the misfed paper.**

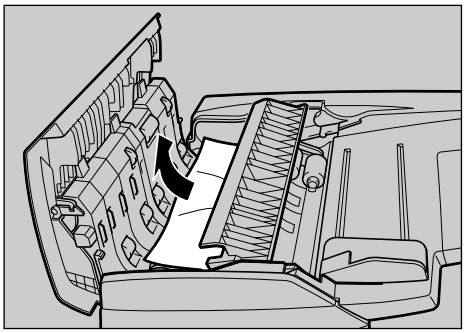

ZFQY060J

8 Hold the blue parts of the panel and move the panel back into place.

If you cannot remove the misfed paper, go to step 9.

9 Hold the ADF external cover (①), and then slowly remove the misfed paper (②).

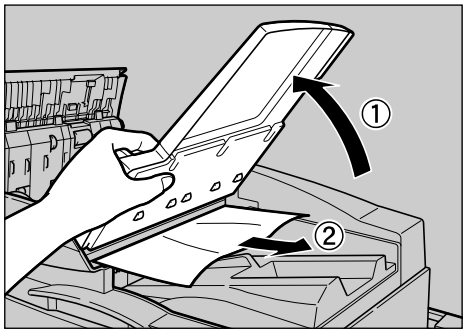

ZFQY070J

10 Lower the ADF external cover back into place.

11 Close the upper cover.

If you cannot remove the misfed paper, go to step 12.

12 Open the Auto Document Feeder.

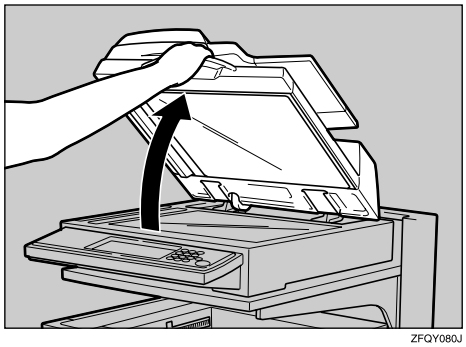

ZFQY080J

13 Move the blue hook to the left and loosen the white cover.

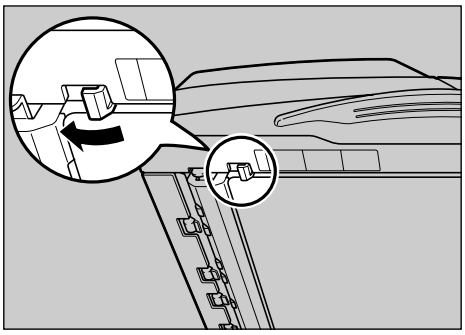

ZFQY090J

14 Pull the white cover toward you and slowly remove the misfed paper.

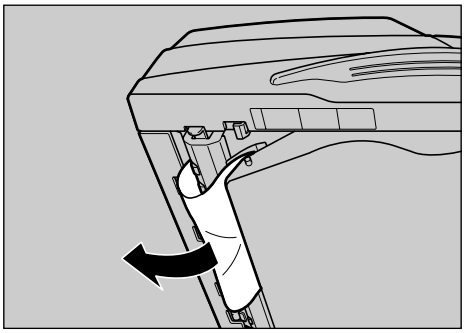

ZFQY100J

15 Hold the middle part on the left of the white cover until it clicks into place.

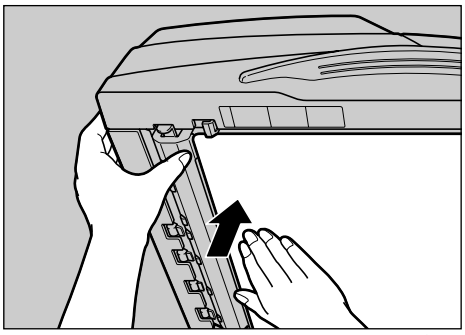

ZFQY110J

16 Close the Auto Document Feeder.

Removing Misfed Paper in the Duplex Feed Unit

You can remove misfed paper from the duplex feed unit by following the procedure below.

Note

❒ When a paper misfeed occurs in the duplex feed unit, the printer usually sends the misfed paper to the right cover, so there is no need to execute this procedure. See p.93 "When "Remove Misfeed A: Internal Path" Appears".

Important

❒ Be sure to remove misfed paper by following the procedure below when the "Remove Misfeed: Dup. Feed Unit" message appears on the display.

1 Turn off the power, and then unplug the power cable.

2 Slowly open the front cover of the printer, remove the green screwdriver.

Reference

p.1 "Using the Screwdriver"

3 Carefully pivot the waste oil bottle outward, in the direction of the arrow.

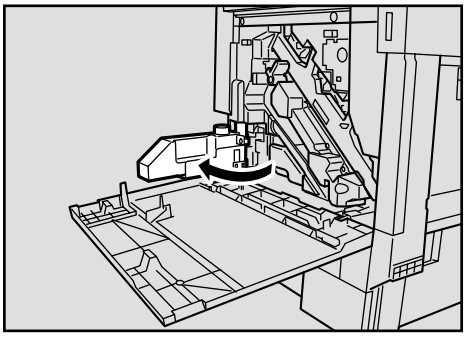

ZHXH150J

⚠ ***CAUTION:***

- *Keep the waste oil bottle away from flames. There is a risk of fire or burns.*

4 Remove the screw fastening the duplex feed unit using the provided screwdriver.

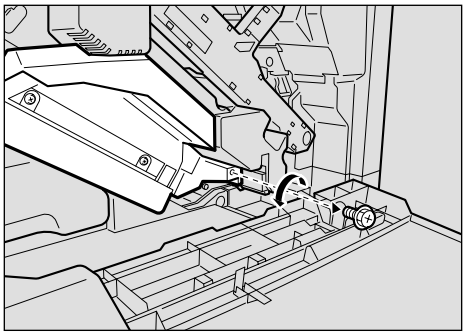

ZHXH320J

You will use this screw to refasten the duplex feed unit later.

5 Pinch the upper left area of the duplex feed unit, and then slowly pull it halfway out.

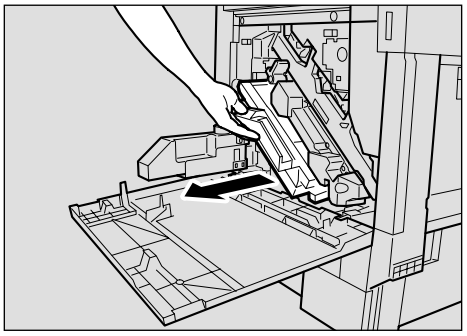

ZHXH780J

6 **Hold the duplex feed unit using both hands, place it on the vertical rail, and slide it straight out.**

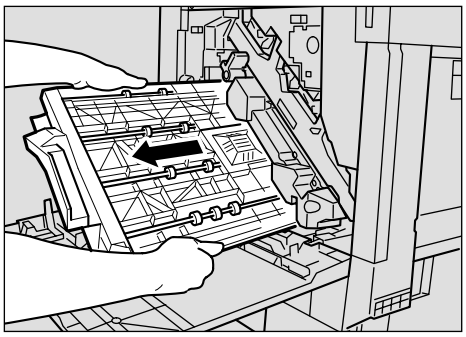

ZHXH650J

7 **Slowly place the duplex feed unit on the floor. Open it slowly, and remove the misfed paper.**

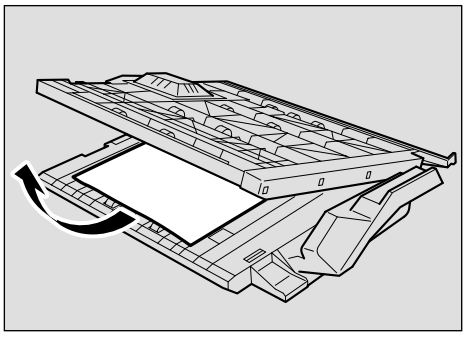

ZHXH660J

Important

- ❒ Do not forcefully open the duplex feed unit. It might damage the unit.

8 **Close the duplex feed unit.**

9 **Hold the duplex feed unit using both hands, place it on the vertical rail, and slide it slowly in until it stops.**

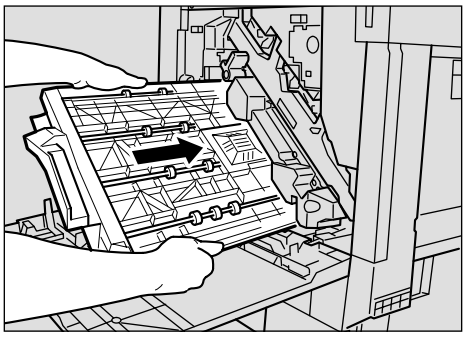

ZHXH290J

The vertical rail is in the position as shown.

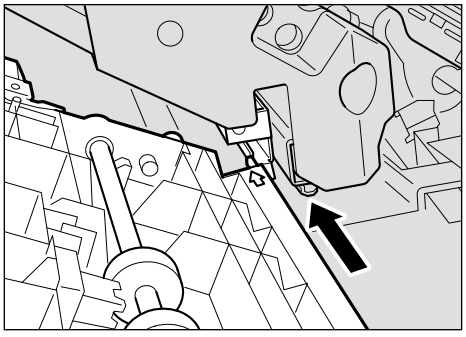

ZHXH300J

10 **Refasten the duplex feed unit using the provided screwdriver. Use the screw removed in step 4.**

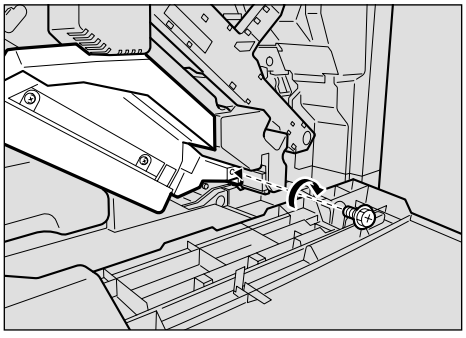

ZHXH310J

Note

- ❒ Be sure to return the provided screwdriver to its original position on the inside of the front cover.

11 Slowly close the waste oil bottle in the direction of the arrow.

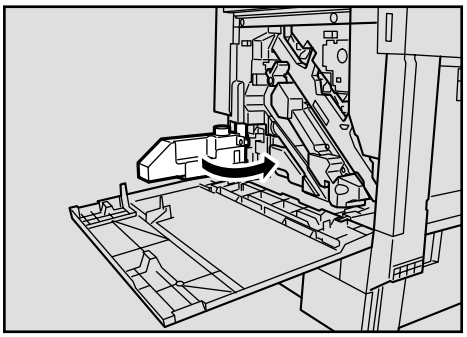

ZHXH160J

12 Slowly close the front cover by pushing the two areas on the left and right.

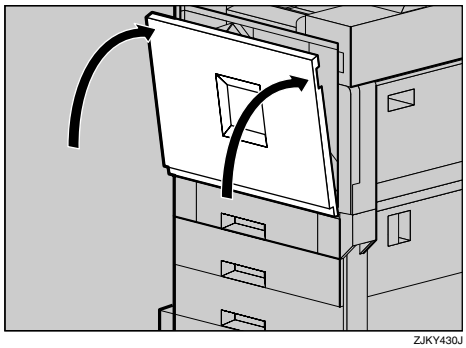

ZJKY430J

13 Plug in the power cable, and then turn on the power.

Removing Jammed Staples

If "Add Staples" appears on the display, or the printer does not staple even after instructed, jammed staples might be the cause.

1 Open the front cover of the 2 tray finisher.

The stapler is positioned in the location as shown.

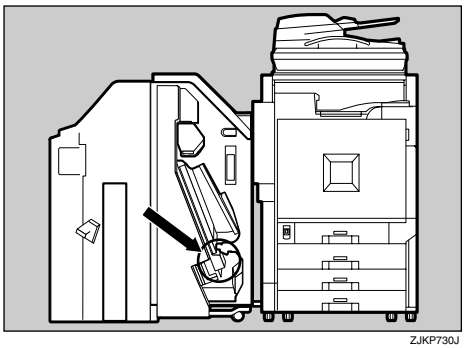

ZJKP730J

2 Remove the cartridge by pulling the green knob in the direction of the arrow.

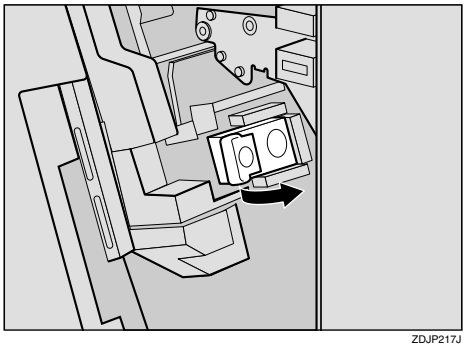

ZDJP217J

3 Open the cartridge face plate to unlock it.

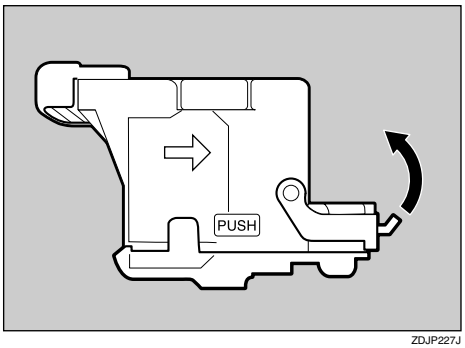

ZDJP227J

4 Remove jammed staples.

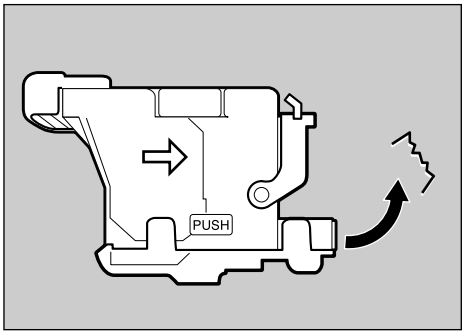

ZDJP228J

5 Close the cartridge face plate so it clicks into place.

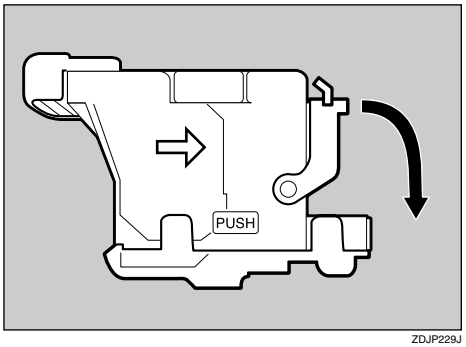

ZDJP229J

6 **Slant and insert the cartridge (①), and then push in until it clicks into place (②).**

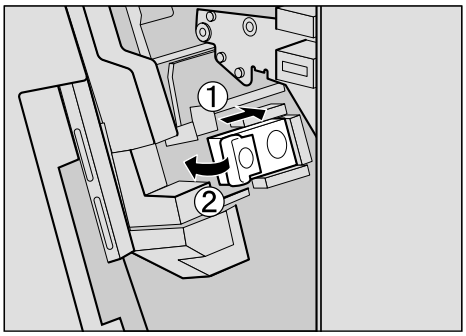

ZDJP218J

7 **Close the front cover of the 2 tray finisher.**

Adding Staples

If "Add Staples" appears on the display, add a new staple refill.

1 Open the front cover of the 2 tray finisher.

The stapler is positioned in the location as shown.

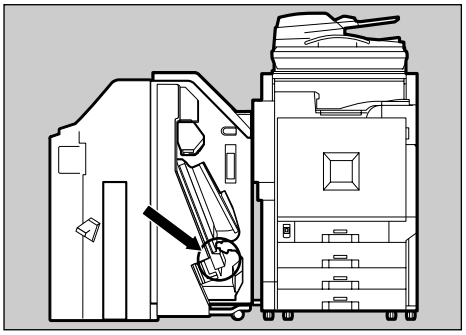

ZJKP730J

2 Remove the cartridge by pulling the green knob in the direction of the arrow.

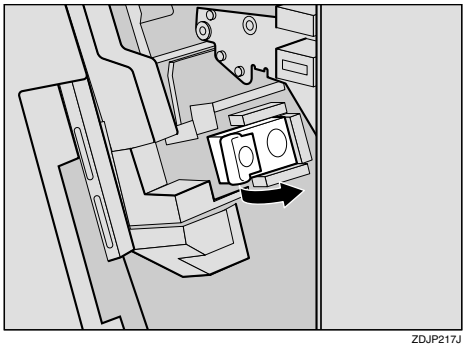

ZDJP217J

3 Push the areas labeled "PUSH", located on both sides of the stapler.

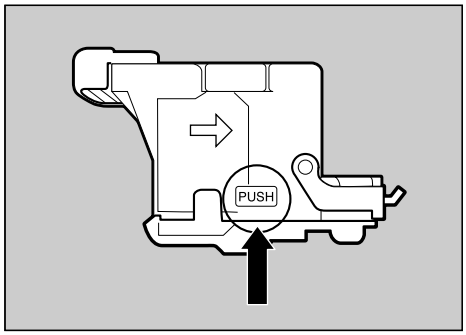

ZDJP222J

The case cover on top rises.

4 Pull the case cover up.

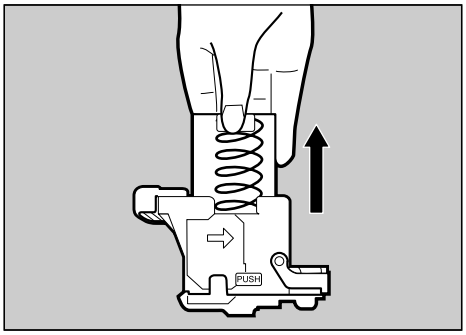

ZDJP223J

5 Hook your finger in the hole of the empty refill case to pull it out.

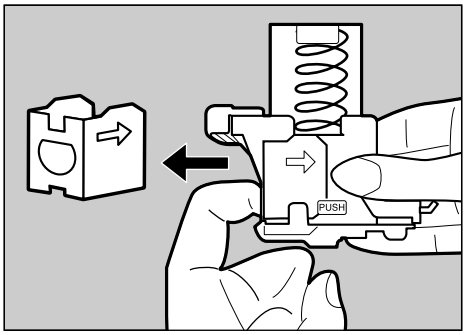

ZDJP224J

6 **Push in until the arrow on the refill case lines up with the arrow on the refill case cover.**

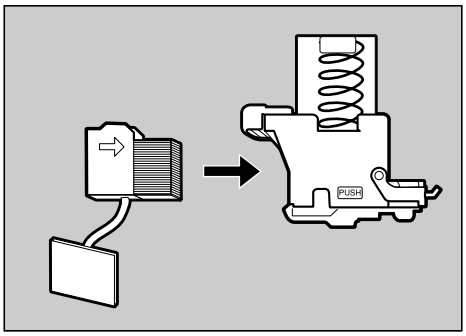

ZDJP225J

7 **Push the case cover down until it clicks into place.**

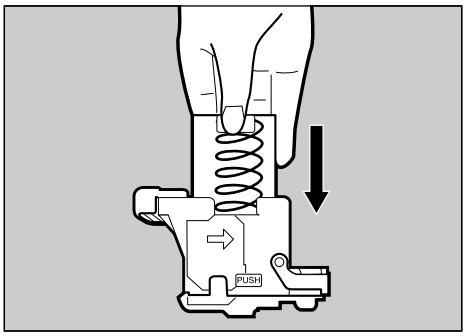

ZDJP230J

8 **Pull out the ribbon used for tying together the staples.**

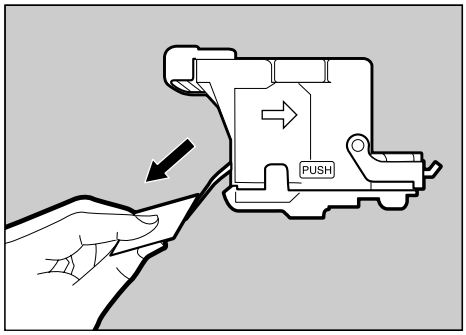

ZDJP226J

Note

❒ Remove the entire length of the ribbon.

9 **Slant and insert the cartridge (①), and then push in until it clicks into place (②).**

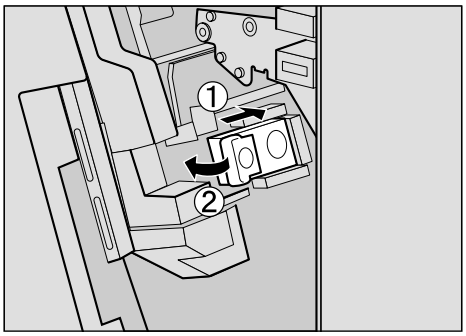

ZDJP218J

10 **Close the front cover of the 2 tray finisher.**

Removing Punch-hole Chips

If "Hole punch receptacle is full. Empty it." appears on the display, the punch waste box is full. Follow these steps to remove paper chips.

Note

- ❒ The same message appears when the punch waste box is not installed correctly.

1 **Open the front cover of the 2 tray finisher.**

The punch waste box is positioned in the location shown in the illustration.

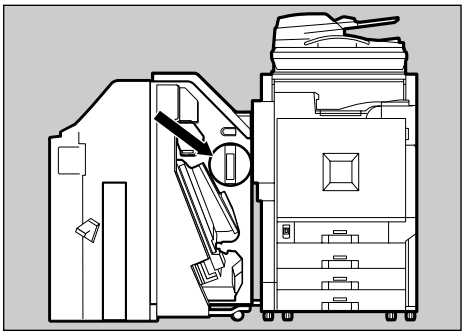

ZJKP740J

2 **Pull out the punch waste box, and then remove the paper chips.**

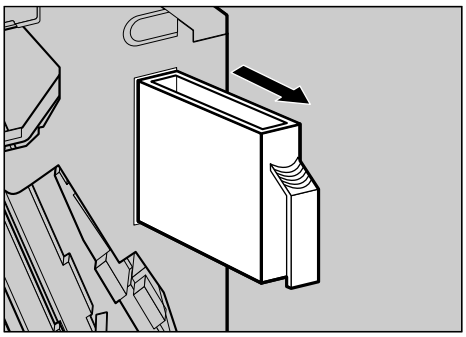

ZDJP220J

3 **Re-install the punch waste box.**

4 **Close the front cover of the 2 tray finisher.**

If the message appears even after removing the Punch-hole chips

If "Punch-hole Chips are Full" appears on the control panel even when the punch waste box is not full, chips might be stuck around the punch waste box hole, as shown. Remove punch-hole chips from around the hole.

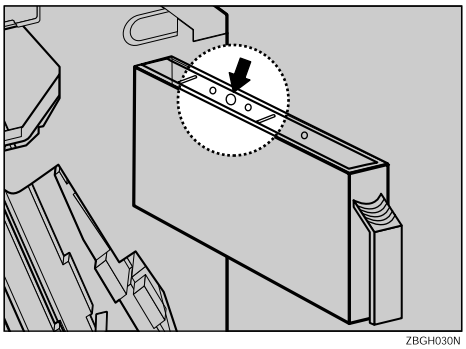

ZBGH030N

When the Front Cover Does Not Close

If "Close Front Cover" appears on the display, the cover is not properly closed, even if it appears to be.

If the front cover does not close, check the green lever is in the locked position, as shown.

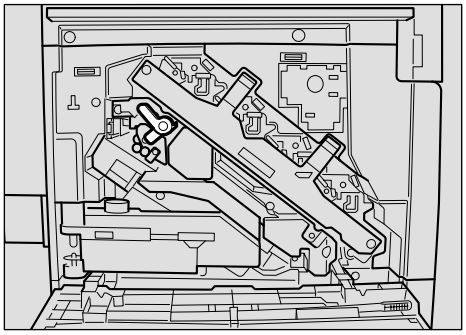

ZHXH020N

1 **Turn off the power, and then unplug the power cable.**

2 **Turn the green lever clockwise.**

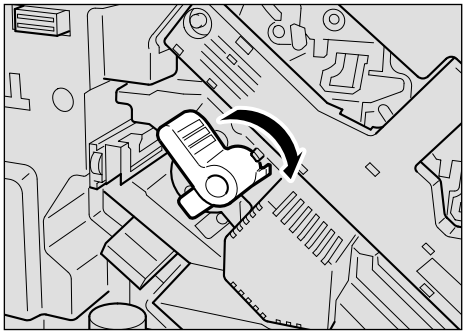

ZHXH420J

3 **Slowly close the front cover by pushing the two areas on the left and right.**

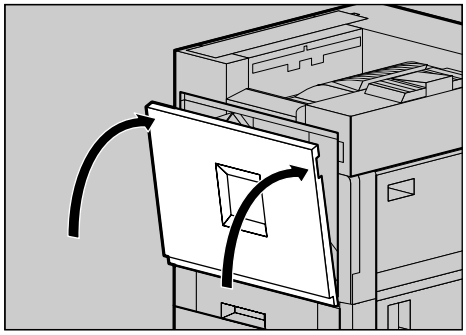

ZDJH041J

4 **Plug in the power cable, and then turn on the power.**

Moving and Transporting the Printer

⚠ ***CAUTION:***

- *When moving the machine, each person should hold the handle on the sides, and lift slowly. Lifting carelessly or dropping it may cause injury.*
- *When moving the printer, remember to unplug the power cord from the wall outlet to avoid fire or electric shock.*
- *When pulling out the plug from the socket, grip the plug to avoid damaging the cord and causing fire or electric shock.*

Note

❒ The printer weighs approximately 85 kg.

Protect the printer by using the original packaging when transporting.

Important

❒ Be sure to disconnect all cables from the printer before moving it.

❒ This printer is a piece of precision machinery. Take care to avoid damage during shipment.

Moving the Printer

⚠ ***CAUTION:***

- *When lifting the machine, use the inset grips on both sides. Otherwise the printer could break or cause injury if dropped.*
- *Before moving the machine, unplug the power cord from the outlet. If the cord is unplugged forcefully, it could become damaged. Damaged plugs or cords can cause an electrical or fire hazard.*

Note

❒ The printer weighs approximately 85 kg.

Moving the printer in the short distance

1 Be sure to check the following:

- The power is turned off.
- The power cable is unplugged from the wall outlet.
- The interface cable is unplugged from the printer.

2 If you have installed external options, remove them.

3 Be sure to close the bypass tray and front cover.

4 Lift the printer and move it horizontally to the place you want to install it.

Important

- ❒ Be sure to move the printer horizontally. Moving the printer slowly prevents toner scattering.
- ❒ If the paper feed unit(s) is installed, detach it and move the printer separately.

Consumables

⚠ ***CAUTION:***

- *Our products are engineered to meet the highest standards of quality and functionality. When purchasing expendable supplies, we recommend using only those specified by an authorized dealer.*

❖ Toner cartridge

Toner cartridge	Average printable number of pages per cartridge *1
Cyan	10,000
Magenta	10,000
Yellow	10,000
Black	20,000

*1 A4 5% test chart, 5 pages/job

Note

❒ The actual number of printed pages you get from a particular toner cartridge depends on the type and size of paper you are using, the contents of print images, and printing environment conditions. This means that toner cartridges may need replacing more frequently than indicated above.

❒ Toner cartridges that come with the printer are for setup purposes, and will not provide the number of pages described above. The average number of printable pages that can be expected from the toner cartridges included in the printer are as follows:

- Black toner cartridge : about 10,000 pages
- Cyan, magenta, and yellow toner cartridges : about 5,000 pages for each cartridge.

❖ Staple Cartridge

Cartridge type	Number of shots
Staple cartridge	5000 shots × 1 with cartridge
Staple Refill cartridge	Refill 5000 shots × 3

❖ Other consumables

Note

❒ The actual lifespan of consumables depends on the type and size of paper you are using, the contents of print images, and printing environment conditions. This means that consumables may need replacing more frequently than indicated. Furthermore, the lifespan of color consumables may be considerably reduced, as mixed printing of black & white and color pages is common.

Name	Consumables	Average printable number of pages *1
Printer Maintenance Kit Type 7000A	Color photoconductor unit × 3	50,000 *2
Printer Maintenance Kit Type 7000B	Color development unit × 3	100,000 *2
Printer Maintenance Kit Type 7000C	Fusing unit × 1	100,000 *2
Printer Maintenance Kit Type 7000D	Black development unit × 1	100,000 *2
Printer Maintenance Kit Type 3800E	Used toner bottle × 1	50,000
Printer Maintenance Kit Type 7000F	Black photoconductor unit × 1	50,000 *2
Printer Maintenance Kit Type 7000G	Fusing oil unit × 1	30,000 *2
Printer Maintenance Kit Type 3800H	Paper feed rollers × 1	150,000

*1 A4 5% test chart, 5 pages/job
*2 When printing each page as a single job, the unit needs extra idling time, thus reducing its print life by half.

INDEX

A

Adding Staples, 105
Adjusting the Color Calibration, 39
Adjusting the Color Registration, 36
    Auto Color Registration, 36
    Fuser Adjustment, 37
Adjusting Tray Registration, 44
Appendix, 109

B

Bypass Tray
    Custom Size, 69
    Paper Type, 70

C

Cleaning and Adjusting the Printer, 31
Cleaning the DustProof Glass, 33
Cleaning the Exposure Glass, 34
Cleaning the Registration Roller, 32
Consumables, 112

D

Data In indicator, 84
Detaching the 2 Tray Finisher, 90
Detaching the PT460 (Multi-bin), 6
Detaching the SR770 (2 Tray Finisher), 5
Display panel, messages, 73

E

Envelopes, 58
Error, 73
Error indicator, 83
Exposure glass, 48

L

Loading Paper, 57, 62
    Optional Paper Feed Unit, 63
    Tray 1, 62
    Tray 2, 63
Loading paper
    Bypass Tray, 67
    Paper Bank PS470, 64
    paper size, 65
    paper type, 66

M

messages, 73
Moving the Printer, 110

O

OHP transparencies, 58
Online indicator, 83
Online key, 83
Opening and Closing the Duplex Reversal Unit, 7, 92
Originals, 47
Other Printing Problems, 86

P

Paper and Other Media, 51
Paper Size, 51
Plain Paper, 57
Printable Area, 61
Printer Does Not Print, 83

R

Remove Misfed Paper
    Finisher, 95
    Fusing Unit, 93
    Internal Path, 93
    Paper Tray, 96
Removing Jammed Staples, 103
Removing Misfed Paper, 90
Removing Misfed Paper into the Duplex Feed Unit, 100
Removing Punch-hole Chips, 107
Replacing Consumables and Maintenance Kit, 1
Replacing the Development Unit, 16
Replacing the Dustproof Filter, 23
Replacing the Fusing Oil Unit, 8
Replacing the Fusing Unit, 20
Replacing the Photoconductor Unit, 12
Replacing the Toner Cartridge, 2
Replacing the Used Toner Bottle, 25

S

Screwdriver, 1
Storing Paper, 57

T

Test Sheet Samples
Fuser Adjust Sheet, 38
Thick Paper, 58
Toner Cartridge, 112
Troubleshooting, 73

W

When the Front Cover Does Not Close, 109

Copyright © 2003